SINGLE

Technical Data Book

4Way Cassette S for Africa(R410A, 50Hz)

Model : AC***JN4D*H/AF
(ODU: AC***JX4D*H/AF)

SAMSUNG

History

Version	Modification	Date	Remark
Ver.1.0	Release TDB	15.11.30	
Ver.1.1	Modified error : the unit of IDU temp in Heating(WB → DB) in Capacity table	15.12.15	
Ver.1.2	Modify 1) System Refrigerant Control Method EEV (P6~9) 2) Cycle Diagram (P28~30) 3) Capacity correction Heating mode (P32) 4) Drain pipe (VP20(OD 25, ID20) → VP25(OD 32, ID 25) (P6~9) 5) Panel weight (5.8 → 5.9, 8.4 → 8.0) (P6~9)	16.9.9	

Index

1 Nomenclature

2 Specifications

3 Capacity table

4 Dimensional drawing

5 Electrical wiring diagram

6 Sound pressure level

7 Cycle diagram

8 Capacity correction

1 Nomenclature

Indoor Units

Model Names

AC	052	J	N	4	D	E	H	/	AF
(1)	(2)	(3)	(4)	(5)	(6)	(7)	(8)		Buyer

(1) Classification

AC	SINGLE
AM	VRF

(2) Capacity

x 1/10 kW (3 digits)

(3) Version

F	2013
H	2014
J	2015

(4) Product Type

N	Indoor Unit
X	Outdoor Unit

(5) Product Notation

1	1Way Cassette
2	2Way Cassette
N	4Way Cassette S (600 x 600)
4	4Way Cassette S
L	LSP Duct (Slim Duct)
M	MSP Duct
H	HSP Duct
C	Ceiling
T	Neo Forte
E	OAP Duct

(6) Feature

D	DELUXE
F	FLAGSHIP
P	Premium
G(EHS)	Cascade (EEV)

(7) Rating Voltage

C	1Ø, 208~230V, 60Hz
E	1Ø, 220~240V, 50Hz
G	3Ø, 380~415V, 50Hz
K	1Ø, 220~240V, 50/60Hz
N	3Ø, 380~415V, 50/60Hz

(8) Mode

C	Cooling Only(R410A)
H	Heat Pump(R410A)
D	Cooling Only(R22)
E	Heat Pump(R22)

1 Nomenclature

Outdoor Units

Model Names

AC	052	J	X	4	D	E	H	/	AF
(1)	(2)	(3)	(4)	(5)	(6)	(7)	(8)		Buyer

(1) Classification

AC	SINGLE
AM	VRF

(2) Capacity

x 1/10 kW (3 digits)
x 1,000 Btu/h (3 digits)

(3) Version

F	2013
H	2014
J	2015

(4) Product Type

B	Indoor Unit
C	Outdoor Unit
N	Indoor Unit (NASA)
X	Outdoor Unit (NASA)

(5) Feature1

A	Inv+Side+General Temp
B	Non Inv+Side+General Temp
S	Inv+Side+Low Temp.
N	Non Inv+Side+Low Temp.

(6) Feature2

F	Standrad+Tropical+Non Module
S	Standard
D	Deluxe
P	Premium
C	Deluxe + Low Temp.

(7) Rating Voltage

E	1Ø, 220~240V, 50Hz
G	3Ø, 380~415V, 50Hz
K	1Ø, 220~240V, 50/60Hz
N	3Ø, 380~415V, 50/60Hz

(8) Mode

H	Heat Pump(R410A)
C	Cooling Only(R410A)
E	Heat Pump(R22)
D	Cooling Only(R22)

4 Way Cassette S

Type					4Way CST	4Way CST
Model Name		Indoor Unit			AC052JN4DEH/AF	AC071JN4DEH/AF
		Outdoor Unit			AC052JX4DEH/AF	AC071JX4DEH/AF
System	Mode			-	Heat Pump	Heat Pump
	Capacity	Cooling(Min/Std/Max)		kW	1.47 / 4.98 / 5.28	2.08 / 7.18 / 7.77
				Btu/h	5,000 / 17,000 / 18,000	7,100 / 24,500 / 26,500
		Heating(Min/Std/Max)		kW	0.73 / 4.98 / 6.45	1.44 / 7.18 / 8.03
				Btu/h	2,500 / 17,000 / 22,000	4,900 / 24,500 / 27,400
	Power	Power Input (Nominal)	Cooling(Min/Std/Max)	kW	0.35 / 1.60 / 1.70	0.38 / 2.45 / 3.00
			Heating(Min/Std/Max)		0.26 / 1.23 / 2.20	0.27 / 2.00 / 2.90
		Current Input (Nominal)	Cooling(Min/Std/Max)	A	2.20 / 7.20 / 8.00	2.30 / 11.00 / 13.00
			Heating(Min/Std/Max)		1.60 / 5.70 / 9.00	1.70 / 9.00 / 12.60
		MCA		A	10.80 (MCA)	20.80 (MCA)
		MFA		A	12.50	25.00
	Energy Efficiency	EER (Nominal Cooling)		-	3.11	2.93
		COP (Nominal Heating)		-	4.05	3.59
		Energy Grade		-	-	-
				-	-	-
	Piping Connections	Liquid Pipe		Ø, mm	6.35	6.35
				Ø, inch	1/4"	1/4"
		Gas Pipe		Ø, mm	12.70	15.88
				Ø, inch	1/2"	5/8"
		Installation Limitation	Max. Length	m	30	30
			Max. Height	m	15	15
	Field Wiring	Power Source Wire		Ø, mm	2.50	2.50
		Transmission Cable		Ø, mm	0.75 ~ 1.50	0.75 ~ 1.50
	Refrigerant	Type		-	R410A	R410A
		Control Method		-	EEV	EEV
		Factory Charging		kg	1.10	1.30
Indoor Unit	Power Supply			Ø, #, V, Hz	1,2,220-240,50	1,2,220-240,50
	Fan	Type		-	Turbo Fan	Turbo Fan
		Motor	Output	W	65 x 1	65 x 1
		Air Flow Rate	High/Mid/Low	CMM	18.00 / 15.00 / 13.00	21.00 / 18.00 / 16.00
				l/s	300.00 / 250.00 / 216.67	350.00 / 300.00 / 266.67
		External Static Pressure	Min/Std/Max	mmAq	-	-
				Pa	-	-
	Drain	Drain Pipe		Ø,mm	VP25 (OD 32, ID 25)	VP25 (OD 32, ID 25)
	Sound	Pressure	High/Mid/Low	dB(A)	37 / 34/ 31	43 / 40/ 37
		Power	Cooling		-	-
	External Dimension	Net Weight		kg	14.50	14.50
		Shipping Weight		kg	18.00	18.00
		Net Dimensions (WxHxD)		mm	840 x 204 x 840	840 x 204 x 840
		Shipping Dimensions (WxHxD)		mm	898 x 275 x 898	898 x 275 x 898
	Panel Size	Panel model		-	PC4NUSKAN	PC4NUSKAN
		Panel Net Weight		kg	5.90	5.90
		Shipping Weight		kg	8.00	8.00
		Net Dimensions (WxHxD)		mm	950 x 45 x 950	950 x 45 x 950
		Shipping Dimensions (WxHxD)		mm	1,005 x 100 x 1,005	1,005 x 100 x 1,005
	Additional Accessories	Drain pump	Drain pump	-	-	-
			Max. Lifting	mm/liter/h	-	-
		Air Filter		-	-	-
Outdoor Unit	Power Supply			Ø, #, V, Hz	1,2,220-240,50	1,2,220-240,50
	Compressor	Type		-	BLDC Rotary	BLDC Rotary
		Model		-	UG4T150LNBEQ	UG4T200FUAE4
		Output		kW	1.42	1.79
		Oil	Type	-	POE	POE
	Fan	Air Flow Rate	Cooling	CMM	40.00	41.00
				l/s	666.67	683.33
	Sound	Pressure	Cooling/Heating	dB(A)	47 / 48	49 / 51
		Power	Cooling		-	-
	External Dimension	Net Weight		kg	36.00	45.00
		Shipping Weight		kg	39.00	48.00
		Net Dimensions (WxHxD)		mm	790 x 548 x 285	880 x 638 x 310
		Shipping Dimensions (WxHxD)		mm	913 x 622 x 371	1,023 x 730 x 413
	Operating Temp. Range	Cooling		ºC	-5.0 ~ 48.0	-5.0 ~ 48.0
		Heating		ºC	-15.0 ~ 24.0	-15.0 ~ 24.0

* Specifications may be subject to change without prior notice.

1) Nominal cooling capacities are based on;
- Indoor temperature : 27°C DB, 19°C WB
- Outdoor temperature : 35°C DB, 24°C WB, Equivalent refrigerant piping : 5m, Level differences : 0m

2) Nominal heating capacities are based on;
- Indoor temperature : 20°C DB, 15°C WB
- Outdoor temperature : 7°C DB, 6°C WB, Equivalent refrigerant piping : 5m, Level differences : 0m

3) Sound pressure was acquired in an anechoic room. Thus actual noise level may be different depending on the installation conditions.

4) These products contain R410A which is fluorinated greenhouse gas.

4 Way Cassette S

Type					4Way CST	4Way CST
Model Name		Indoor Unit			AC090JN4DEH/AF	AC100JN4DEH/AF
		Outdoor Unit			AC090JX4DEH/AF	AC100JX4DGH/AF
System	Mode			-	Heat Pump	Heat Pump
	Capacity	Cooling(Min/Std/Max)		kW	2.93 / 8.79 / 9.96	3.22 / 10.26 / 10.99
				Btu/h	10,000 / 30,000 / 34,000	11,000 / 35,000 / 37,500
		Heating(Min/Std/Max)		kW	1.29 / 9.23 / 10.26	2.17 / 10.26 / 11.58
				Btu/h	4,400 / 31,500 / 35,000	7,400 / 35,000 / 39,500
	Power	Power Input (Nominal)	Cooling(Min/Std/Max)	kW	0.87 / 2.80 / 4.50	0.70 / 3.55 / 4.80
			Heating(Min/Std/Max)		0.60 / 2.45 / 4.10	0.45 / 2.75 / 4.26
		Current Input (Nominal)	Cooling(Min/Std/Max)	A	4.70 / 12.50 / 20.00	2.00 / 5.70 / 9.10
			Heating(Min/Std/Max)		3.50 / 11.00 / 18.00	1.50 / 4.50 / 7.90
		MCA		A	23.70 (MCA)	13.70 (MCA)
		MFA		A	27.50	15.10
	Energy Efficiency	EER (Nominal Cooling)		-	3.14	2.89
		COP (Nominal Heating)		-	3.77	3.73
		Energy Grade		-	-	-
				-	-	-
	Piping Connections	Liquid Pipe		Ø, mm	9.52	9.52
				Ø, inch	3/8"	3/8"
		Gas Pipe		Ø, mm	15.88	15.88
				Ø, inch	5/8"	5/8"
		Installation Limitation	Max. Length	m	50	50
			Max. Height	m	30	30
	Field Wiring	Power Source Wire		Ø, mm	2.50	2.50
		Transmission Cable		Ø, mm	0.75 ~ 1.50	0.75 ~ 1.50
	Refrigerant	Type		-	R410A	R410A
		Control Method		-	EEV	EEV
		Factory Charging		kg	2.50	2.50
Indoor Unit	Power Supply			Ø, #, V, Hz	1,2,220-240,50	1,2,220-240,50
	Fan	Type		-	Turbo Fan	Turbo Fan
		Motor	Output	W	97 x 1	97 x 1
		Air Flow Rate	High/Mid/Low	CMM	29.00 / 24.00 / 19.00	33.00 / 26.00 / 19.00
				l/s	483.33 / 400.00 / 316.67	550.00 / 433.33 / 316.67
		External Static Pressure	Min/Std/Max	mmAq	-	-
				Pa	-	-
	Drain	Drain Pipe		Ø,mm	VP25 (OD 32, ID 25)	VP25 (OD 32, ID 25)
	Sound	Pressure	High/Mid/Low	dB(A)	42 / 38 / 33	43 / 38 / 33
		Power	Cooling		-	-
	External Dimension	Net Weight		kg	18.00	18.00
		Shipping Weight		kg	22.00	22.00
		Net Dimensions (WxHxD)		mm	840 x 288 x 840	840 x 288 x 840
		Shipping Dimensions (WxHxD)		mm	898 x 357 x 898	898 x 357 x 898
	Panel Size	Panel model		-	PC4NUSKAN	PC4NUSKAN
		Panel Net Weight		kg	5.90	5.90
		Shipping Weight		kg	8.00	8.00
		Net Dimensions (WxHxD)		mm	950 x 45 x 950	950 x 45 x 950
		Shipping Dimensions (WxHxD)		mm	1,005 x 100 x 1,005	1,005 x 100 x 1,005
	Additional Accessories	Drain pump	Drain pump	-	-	-
			Max. Lifting	mm/liter/h	-	-
		Air Filter		-	-	-
Outdoor Unit	Power Supply			Ø, #, V, Hz	1,2,220-240,50	3,4,380-415,50
	Compressor	Type		-	Twin BLDC Rotary	Twin BLDC Rotary
		Model		-	UG8T300LNBJU	UG8T300FUCJU
		Output		kW	2.82	2.82
		Oil	Type	-	PVE	PVE
	Fan	Air Flow Rate	Cooling	CMM	60.00	60.00
				l/s	1,000.00	1,000.00
	Sound	Pressure	Cooling/Heating	dB(A)	54 / 56	55 / 57
		Power	Cooling		-	-
	External Dimension	Net Weight		kg	67.00	69.50
		Shipping Weight		kg	72.00	74.50
		Net Dimensions (WxHxD)		mm	880 x 967 x 320	880 x 967 x 320
		Shipping Dimensions (WxHxD)		mm	1,047 x 1,045 x 415	1,047 x 1,045 x 415
	Operating Temp. Range	Cooling		ºC	-5.0 ~ 48.0	-5.0 ~ 48.0
		Heating		ºC	-15.0 ~ 24.0	-15.0 ~ 24.0

* Specifications may be subject to change without prior notice.

1) Nominal cooling capacities are based on;
- Indoor temperature : 27°C DB, 19°C WB
- Outdoor temperature : 35°C DB, 24°C WB, Equivalent refrigerant piping : 5m, Level differences : 0m

2) Nominal heating capacities are based on;
- Indoor temperature : 20°C DB, 15°C WB
- Outdoor temperature : 7°C DB, 6°C WB, Equivalent refrigerant piping : 5m, Level differences : 0m

3) Sound pressure was acquired in an anechoic room. Thus actual noise level may be different depending on the installation conditions.

4) These products contain R410A which is fluorinated greenhouse gas.

4 Way Cassette S

Type					4Way CST	4Way CST
Model Name		Indoor Unit			AC100JN4DEH/AF	AC120JN4DEH/AF
		Outdoor Unit			AC100JX4DEH/AF	AC120JX4DGH/AF
System	Mode			-	Heat Pump	Heat Pump
	Capacity	Cooling(Min/Std/Max)		kW	3.22 / 10.26 / 10.84	2.93 / 12.31 / 12.46
				Btu/h	11,000 / 35,000 / 37,000	10,000 / 42,000 / 42,500
		Heating(Min/Std/Max)		kW	2.17 / 10.26 / 11.58	3.52 / 13.48 / 16.35
				Btu/h	7,400 / 35,000 / 39,500	12,000 / 46,000 / 55,800
	Power	Power Input (Nominal)	Cooling(Min/Std/Max)	kW	0.70 / 3.60 / 4.80	1.03 / 4.32 / 5.89
			Heating(Min/Std/Max)		0.45 / 2.75 / 4.26	0.88 / 4.35 / 7.30
		Current Input (Nominal)	Cooling(Min/Std/Max)	A	4.00 / 16.00 / 21.00	2.10 / 6.80 / 9.00
			Heating(Min/Std/Max)		2.90 / 12.00 / 19.50	1.80 / 6.80 / 12.00
		MCA		A	23.70 (MCA)	13.70 (MCA)
		MFA		A	27.50	15.10
	Energy Efficiency	EER (Nominal Cooling)		-	2.85	2.85
		COP (Nominal Heating)		-	3.73	3.10
		Energy Grade		-	-	-
				-	-	-
	Piping Connections	Liquid Pipe		Ø, mm	9.52	9.52
				Ø, inch	3/8"	3/8"
		Gas Pipe		Ø, mm	15.88	15.88
				Ø, inch	5/8"	5/8"
		Installation Limitation	Max. Length	m	50	50
			Max. Height	m	30	30
	Field Wiring	Power Source Wire		Ø, mm	2.50	2.50
		Transmission Cable		Ø, mm	0.75 ~ 1.50	0.75 ~ 1.50
	Refrigerant	Type		-	R410A	R410A
		Control Method		-	EEV	EEV
		Factory Charging		kg	2.50	2.20
Indoor Unit	Power Supply			Ø, #, V, Hz	1,2,220-240,50	1,2,220-240,50
	Fan	Type		-	Turbo Fan	Turbo Fan
		Motor	Output	W	97 x 1	97 x 1
		Air Flow Rate	High/Mid/Low	CMM	33.00 / 26.00 / 19.00	31.00 / 24.00 / 19.00
				l/s	550.00 / 433.33 / 316.67	516.67 / 400.00 / 316.67
		External Static Pressure	Min/Std/Max	mmAq	-	-
				Pa	-	-
	Drain	Drain Pipe		Ø,mm	VP25 (OD 32, ID 25)	VP25 (OD 32, ID 25)
	Sound	Pressure	High/Mid/Low	dB(A)	43 / 38 / 33	44 / 40 / 36
		Power	Cooling		-	-
	External Dimension	Net Weight		kg	18.00	18.00
		Shipping Weight		kg	22.00	22.00
		Net Dimensions (WxHxD)		mm	840 x 288 x 840	840 x 288 x 840
		Shipping Dimensions (WxHxD)		mm	898 x 357 x 898	898 x 357 x 898
	Panel Size	Panel model		-	PC4NUSKAN	PC4NUSKAN
		Panel Net Weight		kg	5.90	5.90
		Shipping Weight		kg	8.00	8.00
		Net Dimensions (WxHxD)		mm	950 x 45 x 950	950 x 45 x 950
		Shipping Dimensions (WxHxD)		mm	1,005 x 100 x 1,005	1,005 x 100 x 1,005
	Additional Accessories	Drain pump	Drain pump	-	-	-
			Max. Lifting	mm/liter/h	-	-
		Air Filter		-	-	-
Outdoor Unit	Power Supply			Ø, #, V, Hz	1,2,220-240,50	3,4,380-415,50
	Compressor	Type		-	Twin BLDC Rotary	Twin BLDC Rotary
		Model		-	UG8T300LNBJU	UG5T450FUFJX
		Output		kW	2.82	4.12
		Oil	Type	-	PVE	PVE
	Fan	Air Flow Rate	Cooling	CMM	60.00	70.00
				l/s	1,000.00	1,166.67
	Sound	Pressure	Cooling/Heating	dB(A)	55 / 57	57 / 58
		Power	Cooling		-	-
	External Dimension	Net Weight		kg	67.00	89.00
		Shipping Weight		kg	72.00	99.00
		Net Dimensions (WxHxD)		mm	880 x 967 x 320	932 x 1,162 x 375
		Shipping Dimensions (WxHxD)		mm	1,047 x 1,045 x 415	1,095 x 1,286 x 476
	Operating Temp. Range	Cooling		ºC	-5.0 ~ 48.0	-5.0 ~ 48.0
		Heating		ºC	-15.0 ~ 24.0	-15.0 ~ 24.0

* Specifications may be subject to change without prior notice.

1) Nominal cooling capacities are based on;
- Indoor temperature : 27°C DB, 19°C WB
- Outdoor temperature : 35°C DB, 24°C WB, Equivalent refrigerant piping : 5m, Level differences : 0m

2) Nominal heating capacities are based on;
- Indoor temperature : 20°C DB, 15°C WB
- Outdoor temperature : 7°C DB, 6°C WB, Equivalent refrigerant piping : 5m, Level differences : 0m

3) Sound pressure was acquired in an anechoic room. Thus actual noise level may be different depending on the installation conditions.

4) These products contain R410A which is fluorinated greenhouse gas.

2 Specifications

4 Way Cassette S

Type					4Way CST
Model Name	Indoor Unit				AC140JN4DEH/AF
	Outdoor Unit				AC140JX4DGH/AF
System	Mode			-	Heat Pump
	Capacity	Cooling(Min/Std/Max)		kW	3.19 / 14.07 / 14.21
				Btu/h	10,900 / 48,000 / 48,500
		Heating(Min/Std/Max)		kW	3.52 / 14.07 / 18.40
				Btu/h	12,000 / 48,000 / 62,800
	Power	Power Input (Nominal)	Cooling(Min/Std/Max)	kW	1.30 / 5.20 / 6.30
			Heating(Min/Std/Max)		1.30 / 4.54 / 7.50
		Current Input (Nominal)	Cooling(Min/Std/Max)	A	3.00 / 8.50 / 9.50
			Heating(Min/Std/Max)		2.00 / 7.00 / 12.40
		MCA		A	13.70 (MCA)
		MFA		A	15.10
	Energy Efficiency	EER (Nominal Cooling)		-	2.71
		COP (Nominal Heating)		-	3.10
		Energy Grade		-	-
				-	-
	Piping Connections	Liquid Pipe		Ø, mm	9.52
				Ø, inch	3/8"
		Gas Pipe		Ø, mm	15.88
				Ø, inch	5/8"
		Installation Limitation	Max. Length	m	50
			Max. Height	m	30
	Field Wiring	Power Source Wire		Ø, mm	2.50
		Transmission Cable		Ø, mm	0.75 ~ 1.50
	Refrigerant	Type		-	R410A
		Control Method		-	EEV
		Factory Charging		kg	2.20
Indoor Unit	Power Supply			Ø, #, V, Hz	1,2,220-240,50
	Fan	Type		-	Turbo Fan
		Motor	Output	W	97 x 1
		Air Flow Rate	High/Mid/Low	CMM	31.00 / 24.00 / 19.00
				l/s	516.67 / 400.00 / 316.67
		External Static Pressure	Min/Std/Max	mmAq	-
				Pa	-
	Drain	Drain Pipe		Ø,mm	VP25 (OD 32, ID 25)
	Sound	Pressure	High/Mid/Low	dB(A)	44 / 40 / 36
		Power	Cooling		-
	External Dimension	Net Weight		kg	18.00
		Shipping Weight		kg	22.00
		Net Dimensions (WxHxD)		mm	840 x 288 x 840
		Shipping Dimensions (WxHxD)		mm	898 x 357 x 898
	Panel Size	Panel model		-	PC4NUSKAN
		Panel Net Weight		kg	5.90
		Shipping Weight		kg	8.00
		Net Dimensions (WxHxD)		mm	950 x 45 x 950
		Shipping Dimensions (WxHxD)		mm	1,005 x 100 x 1,005
	Additional Accessories	Drain pump	Drain pump	-	-
			Max. Lifting	mm/liter/h	-
		Air Filter		-	-
Outdoor Unit	Power Supply			Ø, #, V, Hz	3,4,380-415,50
	Compressor	Type		-	Twin BLDC Rotary
		Model		-	UG5T450FUFJX
		Output		kW	4.12
		Oil	Type	-	PVE
	Fan	Air Flow Rate	Cooling	CMM	70.00
				l/s	1,166.67
	Sound	Pressure	Cooling/Heating	dB(A)	57 / 59
		Power	Cooling		-
	External Dimension	Net Weight		kg	89.00
		Shipping Weight		kg	99.00
		Net Dimensions (WxHxD)		mm	932 x 1,162 x 375
		Shipping Dimensions (WxHxD)		mm	1,095 x 1,286 x 476
	Operating Temp. Range	Cooling		ºC	-5.0 ~ 48.0
		Heating		ºC	-15.0 ~ 24.0

* Specifications may be subject to change without prior notice.

1) Nominal cooling capacities are based on;
- Indoor temperature : 27°C DB, 19°C WB
- Outdoor temperature : 35°C DB, 24°C WB, Equivalent refrigerant piping : 5m, Level differences : 0m

2) Nominal heating capacities are based on;
- Indoor temperature : 20°C DB, 15°C WB
- Outdoor temperature : 7°C DB, 6°C WB, Equivalent refrigerant piping : 5m, Level differences : 0m

3) Sound pressure was acquired in an anechoic room. Thus actual noise level may be different depending on the installation conditions.

4) These products contain R410A which is fluorinated greenhouse gas.

4 Way Cassette S

AC052JN4DEH/AF + AC052JX4DEH/AF

Cooling

TC(Total Capacity), SHC(Sensible Heat Capacity), PI(Power Input)

Outdoor Air Temp. (DB)	Indoor temperature (ºC)																				
	20 (DB)			23 (DB)			26 (DB)			27 (DB)			28 (DB)			30 (DB)			32 (DB)		
	14 (WB)			16 (WB)			18 (WB)			19 (WB)			20 (WB)			22 (WB)			24 (WB)		
	TC(MBH)	SHC(MBH)	PI(kW)	TC(MBH)	SHC(MBH)	PI(kW)	TC(MBH)	SHC(MBH)	PI(kW)	TC(MBH)	SHC(MBH)	PI(kW)	TC(MBH)	SHC(MBH)	PI(kW)	TC(MBH)	SHC(MBH)	PI(kW)	TC(MBH)	SHC(MBH)	PI(kW)
-5.0	15.52	12.41	0.66	15.90	12.72	0.68	16.29	13.03	0.69	16.69	13.35	0.71	16.96	13.57	0.72	17.09	13.67	0.73	17.50	14.00	0.74
21.0	15.80	12.64	0.85	16.18	12.95	0.87	16.58	13.27	0.89	16.99	13.59	0.91	17.26	13.81	0.92	17.40	13.92	0.93	17.82	14.25	0.95
35.0	15.81	12.64	1.49	16.19	12.96	1.52	16.59	13.27	1.56	**17.00**	**13.60**	**1.60**	17.27	13.82	1.63	17.41	13.93	1.64	17.83	14.26	1.68
46.0	13.27	10.61	1.80	13.59	10.87	1.85	13.93	11.14	1.89	14.27	11.42	1.94	14.50	11.60	1.97	14.61	11.69	1.99	14.96	11.97	2.03
48.0	12.50	10.00	1.81	12.80	10.24	1.86	13.12	10.49	1.90	13.44	10.75	1.95	13.66	10.92	1.98	13.76	11.01	2.00	14.09	11.27	2.04

Heating

TC : Total Capacity, PI: Power Input

Outdoor Air Temp. (DB)	Indoor temperature (ºC)											
	16.0 (DB)		18.0 (DB)		20.0 (DB)		21.0 (DB)		22.0 (DB)		24.0 (DB)	
	TC(MBH)	PI(kW)	TC(MBH)	PI(kW)	TC(MBH)	PI(kW)	TC(MBH)	PI(kW)	TC(MBH)	PI(kW)	TC(MBH)	PI(kW)
-15.0	13.60	1.65	13.46	1.64	13.33	1.62	13.20	1.60	13.06	1.59	12.93	1.57
-10.0	14.53	1.55	14.38	1.54	14.24	1.52	14.10	1.50	13.96	1.49	13.82	1.47
0.0	16.39	1.36	16.23	1.34	16.07	1.33	15.91	1.32	15.75	1.30	15.59	1.29
7.0	17.34	1.25	17.17	1.24	**17.00**	**1.23**	16.83	1.22	16.66	1.21	16.50	1.19
24.0	21.53	1.14	21.32	1.13	21.11	1.12	20.90	1.11	20.69	1.10	20.48	1.09

AC071JN4DEH/AF + AC071JX4DEH/AF

Cooling

TC(Total Capacity), SHC(Sensible Heat Capacity), PI(Power Input)

Outdoor Air Temp. (DB)	Indoor temperature (ºC)																				
	20 (DB)			23 (DB)			26 (DB)			27 (DB)			28 (DB)			30 (DB)			32 (DB)		
	14 (WB)			16 (WB)			18 (WB)			19 (WB)			20 (WB)			22 (WB)			24 (WB)		
	TC(MBH)	SHC(MBH)	PI(kW)	TC(MBH)	SHC(MBH)	PI(kW)	TC(MBH)	SHC(MBH)	PI(kW)	TC(MBH)	SHC(MBH)	PI(kW)	TC(MBH)	SHC(MBH)	PI(kW)	TC(MBH)	SHC(MBH)	PI(kW)	TC(MBH)	SHC(MBH)	PI(kW)
-5.0	28.24	22.60	1.53	28.94	23.15	1.56	29.65	23.72	1.60	30.38	24.30	1.64	30.87	24.69	1.67	31.11	24.89	1.68	31.86	25.48	1.72
21.0	27.33	21.87	1.75	28.01	22.40	1.80	28.69	22.96	1.84	29.40	23.52	1.89	29.87	23.90	1.92	30.11	24.08	1.93	30.83	24.66	1.98
35.0	22.78	18.22	2.28	23.34	18.67	2.33	23.91	19.13	2.39	**24.50**	**19.60**	**2.45**	24.89	19.91	2.49	25.09	20.07	2.51	25.69	20.55	2.57
46.0	19.59	15.67	2.87	20.07	16.06	2.94	20.56	16.45	3.01	21.07	16.86	3.09	21.41	17.13	3.14	21.58	17.26	3.16	22.09	17.67	3.24
48.0	16.63	13.30	2.19	17.04	13.63	2.24	17.46	13.96	2.30	17.89	14.31	2.35	18.17	14.54	2.39	18.31	14.65	2.41	18.75	15.00	2.47

Heating

TC : Total Capacity PI: Power Input

Outdoor Air Temp. (DB)	Indoor temperature (ºC)											
	16.0 (DB)		18.0 (DB)		20.0 (DB)		21.0 (DB)		22.0 (DB)		24.0 (DB)	
	TC(MBH)	PI(kW)	TC(MBH)	PI(kW)	TC(MBH)	PI(kW)	TC(MBH)	PI(kW)	TC(MBH)	PI(kW)	TC(MBH)	PI(kW)
-15.0	15.00	1.73	14.85	1.72	14.70	1.70	14.55	1.68	14.41	1.67	14.26	1.65
-10.0	18.24	2.06	18.06	2.04	17.89	2.02	17.71	2.00	17.53	1.98	17.35	1.96
0.0	21.24	1.94	21.03	1.92	20.83	1.90	20.62	1.88	20.41	1.86	20.21	1.84
7.0	24.99	2.04	24.75	2.02	**24.50**	**2.00**	24.26	1.98	24.01	1.96	23.77	1.94
24.0	30.99	2.08	30.68	2.06	30.38	2.04	30.08	2.02	29.78	2.00	29.48	1.98

4 Way Cassette S

AC090JN4DEH/AF + AC090JX4DEH/AF

Cooling

TC(Total Capacity), SHC(Sensible Heat Capacity), PI(Power Input)

Outdoor Air Temp. (DB)	Indoor temperature (ºC)																				
	20 (DB)			23 (DB)			26 (DB)			27 (DB)			28 (DB)			30 (DB)			32 (DB)		
	14 (WB)			16 (WB)			18 (WB)			19 (WB)			20 (WB)			22 (WB)			24 (WB)		
	TC(MBH)	SHC(MBH)	PI(kW)	TC(MBH)	SHC(MBH)	PI(kW)	TC(MBH)	SHC(MBH)	PI(kW)	TC(MBH)	SHC(MBH)	PI(kW)	TC(MBH)	SHC(MBH)	PI(kW)	TC(MBH)	SHC(MBH)	PI(kW)	TC(MBH)	SHC(MBH)	PI(kW)
-5.0	33.93	27.15	1.65	34.77	27.82	1.70	35.62	28.50	1.74	36.50	29.20	1.78	37.08	29.67	1.81	37.38	29.90	1.82	38.27	30.62	1.87
21.0	31.61	25.29	2.16	32.39	25.91	2.21	33.18	26.55	2.26	34.00	27.20	2.32	34.54	27.64	2.36	34.82	27.85	2.38	35.65	28.52	2.43
35.0	27.89	22.31	2.60	28.58	22.86	2.67	29.28	23.42	2.73	**30.00**	**24.00**	**2.80**	30.48	24.38	2.84	30.72	24.58	2.87	31.46	25.17	2.94
46.0	19.52	15.62	2.29	20.00	16.00	2.34	20.50	16.40	2.40	21.00	16.80	2.46	21.34	17.07	2.50	21.50	17.20	2.52	22.02	17.62	2.58
48.0	18.22	14.58	2.25	18.67	14.94	2.31	19.13	15.30	2.36	19.60	15.68	2.42	19.91	15.93	2.46	20.07	16.06	2.48	20.55	16.44	2.54

Heating

TC : Total Capacity, PI: Power Input

Outdoor Air Temp. (DB)	Indoor temperature (ºC)											
	16.0 (DB)		18.0 (DB)		20.0 (DB)		21.0 (DB)		22.0 (DB)		24.0 (DB)	
	TC(MBH)	PI(kW)	TC(MBH)	PI(kW)	TC(MBH)	PI(kW)	TC(MBH)	PI(kW)	TC(MBH)	PI(kW)	TC(MBH)	PI(kW)
-15.0	26.01	3.47	25.76	3.43	25.50	3.40	25.24	3.37	24.99	3.33	24.74	3.30
-10.0	32.03	3.93	31.71	3.89	31.40	3.85	31.09	3.81	30.78	3.77	30.47	3.74
0.0	31.62	2.76	31.31	2.74	31.00	2.71	30.69	2.68	30.38	2.66	30.08	2.63
7.0	32.13	2.50	31.82	2.47	**31.50**	**2.45**	31.18	2.43	30.87	2.40	30.56	2.38
24.0	41.21	2.58	40.80	2.56	40.40	2.53	40.00	2.50	39.60	2.48	39.20	2.45

AC100JN4DEH/AF + AC100JX4DGH/AF

Cooling

TC(Total Capacity), SHC(Sensible Heat Capacity), PI(Power Input)

Outdoor Air Temp. (DB)	Indoor temperature (ºC)																				
	20 (DB)			23 (DB)			26 (DB)			27 (DB)			28 (DB)			30 (DB)			32 (DB)		
	14 (WB)			16 (WB)			18 (WB)			19 (WB)			20 (WB)			22 (WB)			24 (WB)		
	TC(MBH)	SHC(MBH)	PI(kW)	TC(MBH)	SHC(MBH)	PI(kW)	TC(MBH)	SHC(MBH)	PI(kW)	TC(MBH)	SHC(MBH)	PI(kW)	TC(MBH)	SHC(MBH)	PI(kW)	TC(MBH)	SHC(MBH)	PI(kW)	TC(MBH)	SHC(MBH)	PI(kW)
-5.0	40.44	32.35	2.20	41.44	33.15	2.26	42.46	33.96	2.31	43.50	34.80	2.37	44.20	35.36	2.41	44.54	35.64	2.43	45.61	36.49	2.49
21.0	37.00	29.60	2.65	37.91	30.33	2.71	38.84	31.08	2.78	39.80	31.84	2.85	40.44	32.35	2.90	40.76	32.60	2.92	41.73	33.39	2.99
35.0	32.54	26.03	3.30	33.34	26.67	3.38	34.16	27.33	3.46	**35.00**	**28.00**	**3.55**	35.56	28.45	3.61	35.84	28.67	3.64	36.70	29.36	3.72
46.0	23.24	18.59	2.86	23.81	19.05	2.93	24.40	19.52	3.01	25.00	20.00	3.08	25.40	20.32	3.13	25.60	20.48	3.15	26.21	20.97	3.23
48.0	21.57	17.26	2.79	22.10	17.68	2.86	22.64	18.11	2.93	23.20	18.56	3.00	23.57	18.86	3.05	23.76	19.01	3.07	24.33	19.46	3.15

Heating

TC : Total Capacity PI: Power Input

Outdoor Air Temp. (DB)	Indoor temperature (ºC)											
	16.0 (DB)		18.0 (DB)		20.0 (DB)		21.0 (DB)		22.0 (DB)		24.0 (DB)	
	TC(MBH)	PI(kW)	TC(MBH)	PI(kW)	TC(MBH)	PI(kW)	TC(MBH)	PI(kW)	TC(MBH)	PI(kW)	TC(MBH)	PI(kW)
-15.0	28.77	3.88	28.48	3.84	28.20	3.80	27.92	3.76	27.64	3.72	27.36	3.69
-10.0	35.50	4.34	35.15	4.29	34.80	4.25	34.45	4.21	34.11	4.17	33.77	4.12
0.0	35.09	3.11	34.74	3.08	34.40	3.05	34.06	3.02	33.72	2.99	33.38	2.96
7.0	35.70	2.81	35.35	2.78	**35.00**	**2.75**	34.65	2.72	34.30	2.70	33.96	2.67
24.0	46.72	2.91	46.26	2.88	45.80	2.85	45.34	2.82	44.89	2.79	44.44	2.77

3 Capacity table

4 Way Cassette S

AC100JN4DEH/AF + AC100JX4DEH/AF

Cooling

TC(Total Capacity), SHC(Sensible Heat Capacity), PI(Power Input)

Outdoor Air Temp. (DB)	Indoor temperature (ºC)																				
	20 (DB)			23 (DB)			26 (DB)			27 (DB)			28 (DB)			30 (DB)			32 (DB)		
	14 (WB)			16 (WB)			18 (WB)			19 (WB)			20 (WB)			22 (WB)			24 (WB)		
	TC(MBH)	SHC(MBH)	PI(kW)	TC(MBH)	SHC(MBH)	PI(kW)	TC(MBH)	SHC(MBH)	PI(kW)	TC(MBH)	SHC(MBH)	PI(kW)	TC(MBH)	SHC(MBH)	PI(kW)	TC(MBH)	SHC(MBH)	PI(kW)	TC(MBH)	SHC(MBH)	PI(kW)
-5.0	40.44	32.35	2.25	41.44	33.15	2.31	42.46	33.96	2.36	43.50	34.80	2.42	44.20	35.36	2.46	44.54	35.64	2.48	45.61	36.49	2.54
21.0	37.00	29.60	2.70	37.91	30.33	2.76	38.84	31.08	2.83	39.80	31.84	2.90	40.44	32.35	2.95	40.76	32.60	2.97	41.73	33.39	3.04
35.0	32.54	26.03	3.35	33.34	26.67	3.43	34.16	27.33	3.51	**35.00**	**28.00**	**3.60**	35.56	28.45	3.66	35.84	28.67	3.69	36.70	29.36	3.77
46.0	23.24	18.59	2.90	23.81	19.05	2.97	24.40	19.52	3.05	25.00	20.00	3.12	25.40	20.32	3.17	25.60	20.48	3.19	26.21	20.97	3.27
48.0	21.57	17.26	2.83	22.10	17.68	2.90	22.64	18.11	2.97	23.20	18.56	3.04	23.57	18.86	3.09	23.76	19.01	3.11	24.33	19.46	3.19

Heating

TC : Total Capacity, PI: Power Input

Outdoor Air Temp. (DB)	Indoor temperature (ºC)											
	16.0 (DB)		18.0 (DB)		20.0 (DB)		21.0 (DB)		22.0 (DB)		24.0 (DB)	
	TC(MBH)	PI(kW)	TC(MBH)	PI(kW)	TC(MBH)	PI(kW)	TC(MBH)	PI(kW)	TC(MBH)	PI(kW)	TC(MBH)	PI(kW)
-15.0	28.77	3.96	28.48	3.92	28.20	3.88	27.92	3.84	27.64	3.80	27.36	3.76
-10.0	35.50	4.43	35.15	4.38	34.80	4.34	34.45	4.30	34.11	4.25	33.77	4.21
0.0	35.09	3.16	34.74	3.13	34.40	3.10	34.06	3.07	33.72	3.04	33.38	3.01
7.0	35.70	2.81	35.35	2.78	**35.00**	**2.75**	34.65	2.72	34.30	2.70	33.96	2.67
24.0	46.72	2.96	46.26	2.93	45.80	2.90	45.34	2.87	44.89	2.84	44.44	2.81

AC120JN4DEH/AF + AC120JX4DGH/AF

Cooling

TC(Total Capacity), SHC(Sensible Heat Capacity), PI(Power Input)

Outdoor Air Temp. (DB)	Indoor temperature (ºC)																				
	20 (DB)			23 (DB)			26 (DB)			27 (DB)			28 (DB)			30 (DB)			32 (DB)		
	14 (WB)			16 (WB)			18 (WB)			19 (WB)			20 (WB)			22 (WB)			24 (WB)		
	TC(MBH)	SHC(MBH)	PI(kW)	TC(MBH)	SHC(MBH)	PI(kW)	TC(MBH)	SHC(MBH)	PI(kW)	TC(MBH)	SHC(MBH)	PI(kW)	TC(MBH)	SHC(MBH)	PI(kW)	TC(MBH)	SHC(MBH)	PI(kW)	TC(MBH)	SHC(MBH)	PI(kW)
-5.0	37.10	29.68	2.41	38.01	30.41	2.47	38.94	31.15	2.53	39.90	31.92	2.59	40.54	32.43	2.63	40.86	32.69	2.65	41.84	33.47	2.72
21.0	38.27	30.61	3.41	39.21	31.37	3.50	40.17	32.14	3.58	41.16	32.93	3.67	41.82	33.45	3.73	42.15	33.72	3.76	43.16	34.53	3.85
35.0	39.05	31.24	4.02	40.01	32.01	4.12	40.99	32.79	4.22	**42.00**	**33.60**	**4.32**	42.67	34.14	4.39	43.01	34.41	4.42	44.04	35.23	4.53
46.0	30.85	24.68	4.62	31.61	25.29	4.73	32.38	25.91	4.85	33.18	26.54	4.97	33.71	26.97	5.05	33.98	27.18	5.09	34.79	27.83	5.21
48.0	28.11	22.49	4.42	28.81	23.04	4.53	29.51	23.61	4.64	30.24	24.19	4.75	30.72	24.58	4.83	30.97	24.77	4.87	31.71	25.37	4.98

Heating

TC : Total Capacity PI: Power Input

Outdoor Air Temp. (DB)	Indoor temperature (ºC)											
	16.0 (DB)		18.0 (DB)		20.0 (DB)		21.0 (DB)		22.0 (DB)		24.0 (DB)	
	TC(MBH)	PI(kW)	TC(MBH)	PI(kW)	TC(MBH)	PI(kW)	TC(MBH)	PI(kW)	TC(MBH)	PI(kW)	TC(MBH)	PI(kW)
-15.0	38.95	5.90	38.56	5.84	38.18	5.79	37.80	5.73	37.42	5.67	37.05	5.61
-10.0	44.11	6.43	43.67	6.37	43.24	6.31	42.81	6.24	42.38	6.18	41.96	6.12
0.0	45.99	6.97	45.53	6.90	45.08	6.83	44.63	6.76	44.18	6.69	43.74	6.63
7.0	46.92	4.44	46.46	4.39	**46.00**	**4.35**	45.54	4.31	45.08	4.26	44.63	4.22
24.0	60.06	4.88	59.47	4.83	58.88	4.79	58.29	4.74	57.71	4.69	57.13	4.64

4 Way Cassette S

AC140JN4DEH/AF + AC140JX4DGH/AF

Cooling

TC(Total Capacity), SHC(Sensible Heat Capacity), PI(Power Input)

Outdoor Air Temp. (DB)	Indoor temperature (ºC)																				
	20 (DB)			23 (DB)			26 (DB)			27 (DB)			28 (DB)			30 (DB)			32 (DB)		
	14 (WB)			16 (WB)			18 (WB)			19 (WB)			20 (WB)			22 (WB)			24 (WB)		
	TC(MBH)	SHC(MBH)	PI(kW)	TC(MBH)	SHC(MBH)	PI(kW)	TC(MBH)	SHC(MBH)	PI(kW)	TC(MBH)	SHC(MBH)	PI(kW)	TC(MBH)	SHC(MBH)	PI(kW)	TC(MBH)	SHC(MBH)	PI(kW)	TC(MBH)	SHC(MBH)	PI(kW)
-5.0	42.39	33.92	2.90	43.44	34.75	2.97	44.51	35.60	3.05	45.60	36.48	3.12	46.33	37.06	3.17	46.69	37.36	3.19	47.82	38.25	3.27
21.0	43.73	34.99	4.11	44.81	35.85	4.21	45.91	36.73	4.31	47.04	37.63	4.42	47.79	38.23	4.49	48.17	38.54	4.53	49.33	39.46	4.63
35.0	44.63	35.70	4.83	45.72	36.58	4.95	46.85	37.48	5.08	**48.00**	**38.40**	**5.20**	48.77	39.01	5.28	49.15	39.32	5.32	50.33	40.27	5.45
46.0	35.25	28.20	5.56	36.12	28.90	5.70	37.01	29.61	5.84	37.92	30.34	5.98	38.53	30.82	6.08	38.83	31.06	6.12	39.76	31.81	6.27
48.0	32.13	25.70	5.32	32.92	26.34	5.45	33.73	26.98	5.58	34.56	27.65	5.72	35.11	28.09	5.81	35.39	28.31	5.86	36.24	28.99	6.00

Heating

TC : Total Capacity, PI: Power Input

Outdoor Air Temp. (DB)	Indoor temperature (ºC)											
	16.0 (DB)		18.0 (DB)		20.0 (DB)		21.0 (DB)		22.0 (DB)		24.0 (DB)	
	TC(MBH)	PI(kW)	TC(MBH)	PI(kW)	TC(MBH)	PI(kW)	TC(MBH)	PI(kW)	TC(MBH)	PI(kW)	TC(MBH)	PI(kW)
-15.0	40.64	6.16	40.24	6.10	39.84	6.04	39.44	5.98	39.05	5.92	38.66	5.86
-10.0	46.03	6.72	45.57	6.65	45.12	6.58	44.67	6.52	44.22	6.45	43.78	6.39
0.0	47.99	7.27	47.51	7.20	47.04	7.13	46.57	7.06	46.10	6.99	45.64	6.92
7.0	48.96	4.63	48.48	4.59	**48.00**	**4.54**	47.52	4.49	47.04	4.45	46.57	4.41
24.0	62.67	5.09	62.05	5.04	61.44	4.99	60.83	4.94	60.22	4.89	59.62	4.85

4 Dimensional drawing

Indoor : 4 Way Cassette S

AC052JN4DEH/AF, AC071JN4DEH/AF, AC090JN4DEH/AF, AC100JN4DEH/AF, AC120JN4DEH/AF, AC140JN4DEH/AF

Units : mm / inches

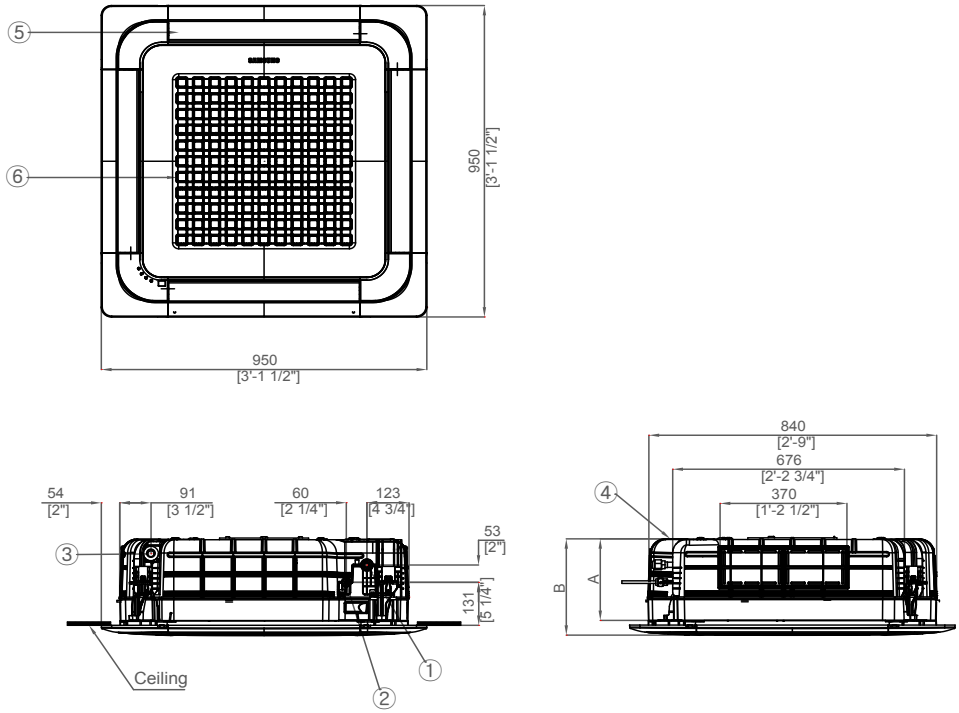

	Description		
	Small	Mid	Big
A (mm)	204	246	288
B (mm)	253	295	337

Table of descriptions			
1	Refrigerant gas pipe	7	Fresh air intake
2	Refrigerant liquid pipe	8	
3	Condensate drain	9	
4	Power & Comm. wiring conduits	10	
5	Air inlet grile	11	
6	Air outlet louver	12	

4 Dimensional drawing

Outdoor

AC052JX4DEH/AF

Units : mm / inches

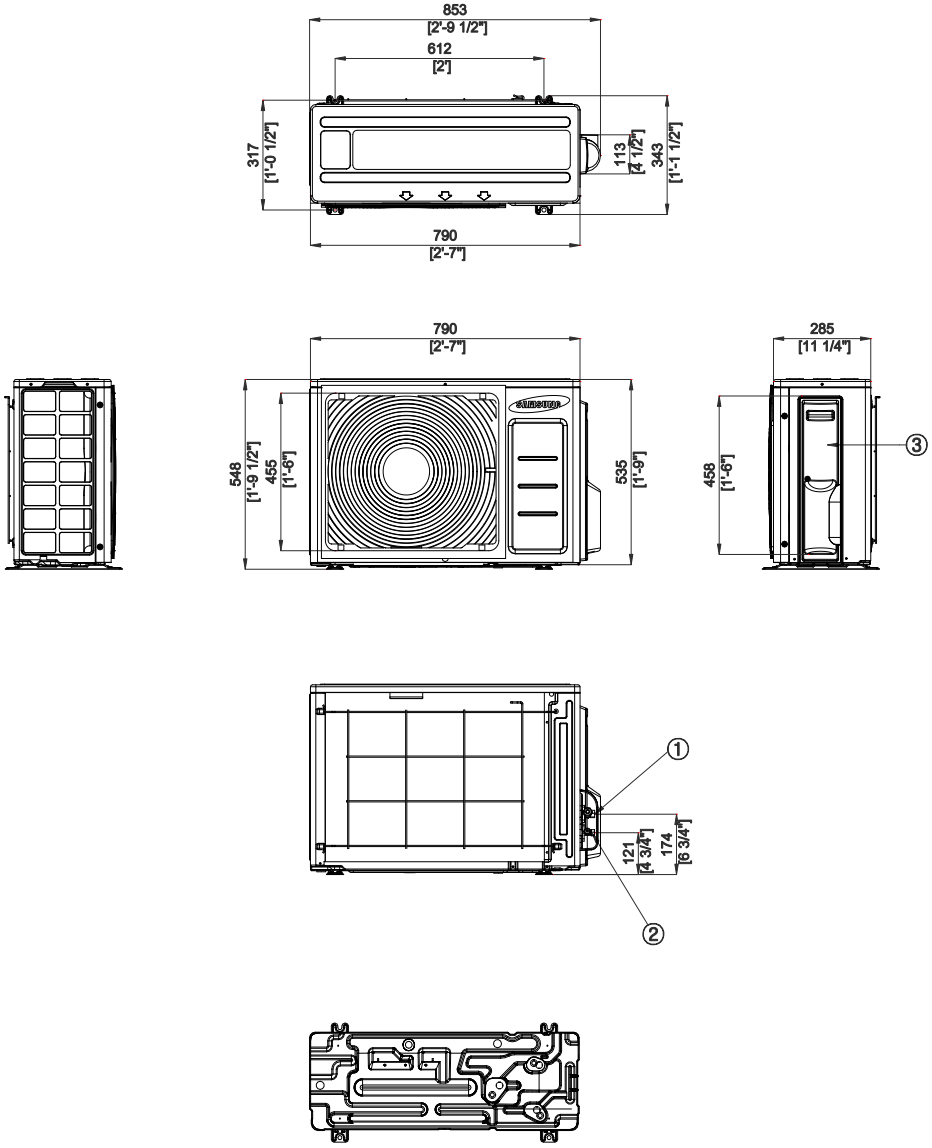

Table of descriptions			
1	Refrigerant gas pipe	7	
2	Refrigerant liquid pipe	8	
3	Power & Comm. wiring conduits	9	
4		10	
5		11	
6		12	

4 Dimensional drawing

Outdoor

AC071JX4DEH/AF

Units : mm / inches

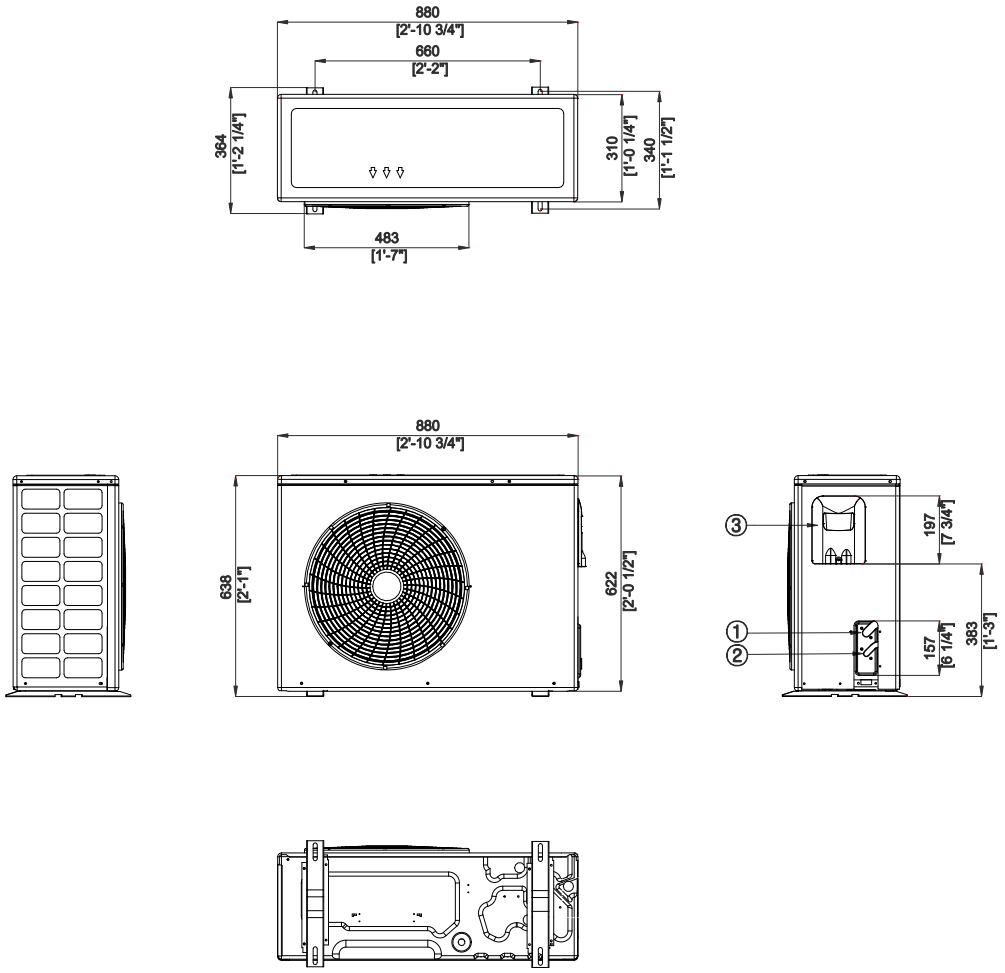

Table of descriptions			
1	Refrigerant gas pipe	7	
2	Refrigerant liquid pipe	8	
3	Power & Comm. wiring conduits	9	
4		10	
5		11	
6		12	

4 Dimensional drawing

Outdoor

AC090JX4DEH/AF, AC100JX4DGH/AF, AC100JX4DEH/AF

Units : mm / inches

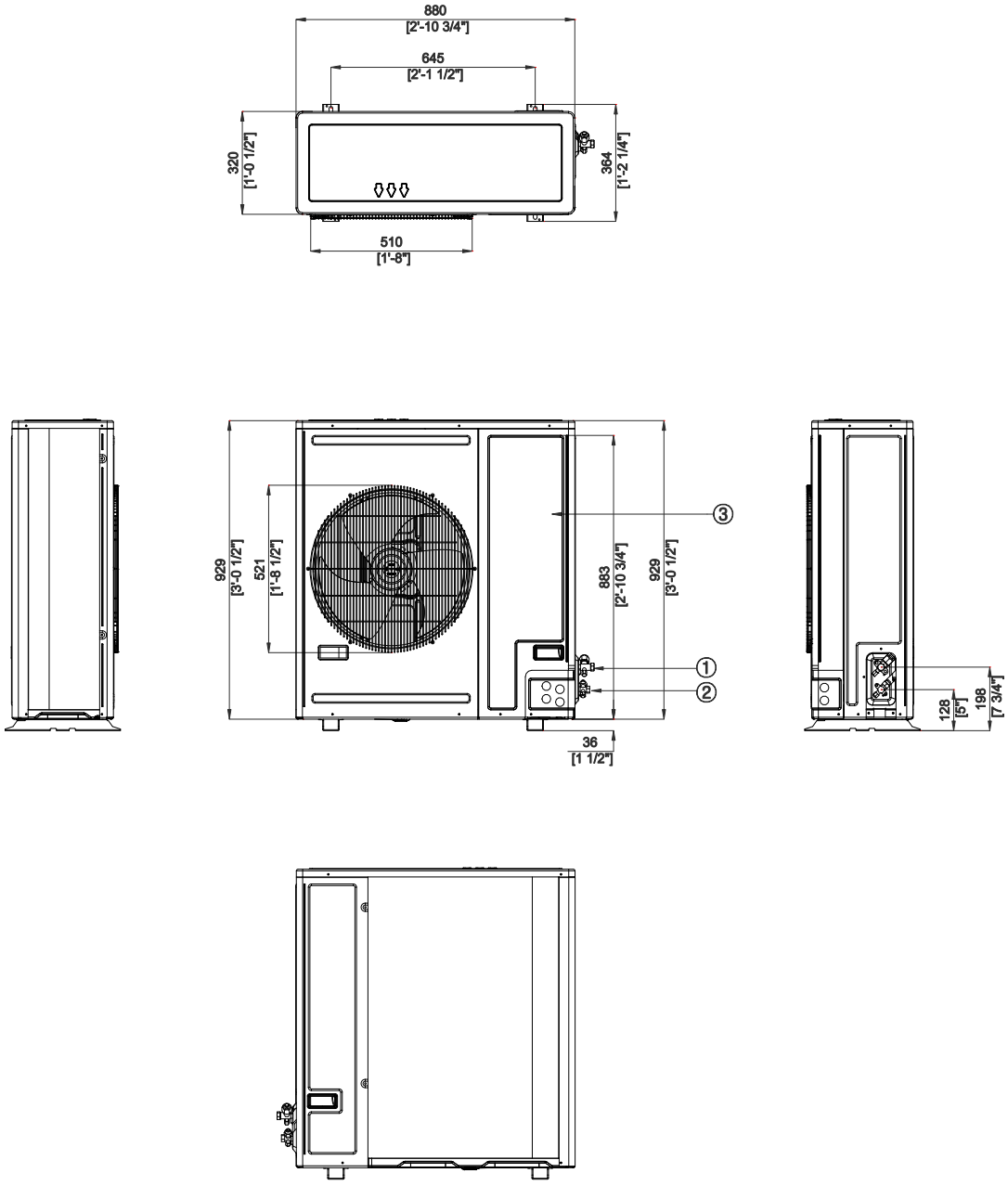

Table of descriptions			
1	Refrigerant gas pipe	7	
2	Refrigerant liquid pipe	8	
3	Power & Comm. wiring conduits	9	
4		10	
5		11	
6		12	

4 Dimensional drawing

Outdoor

AC120JX4DGH/AF, AC140JX4DGH/AF

Units : mm / inches

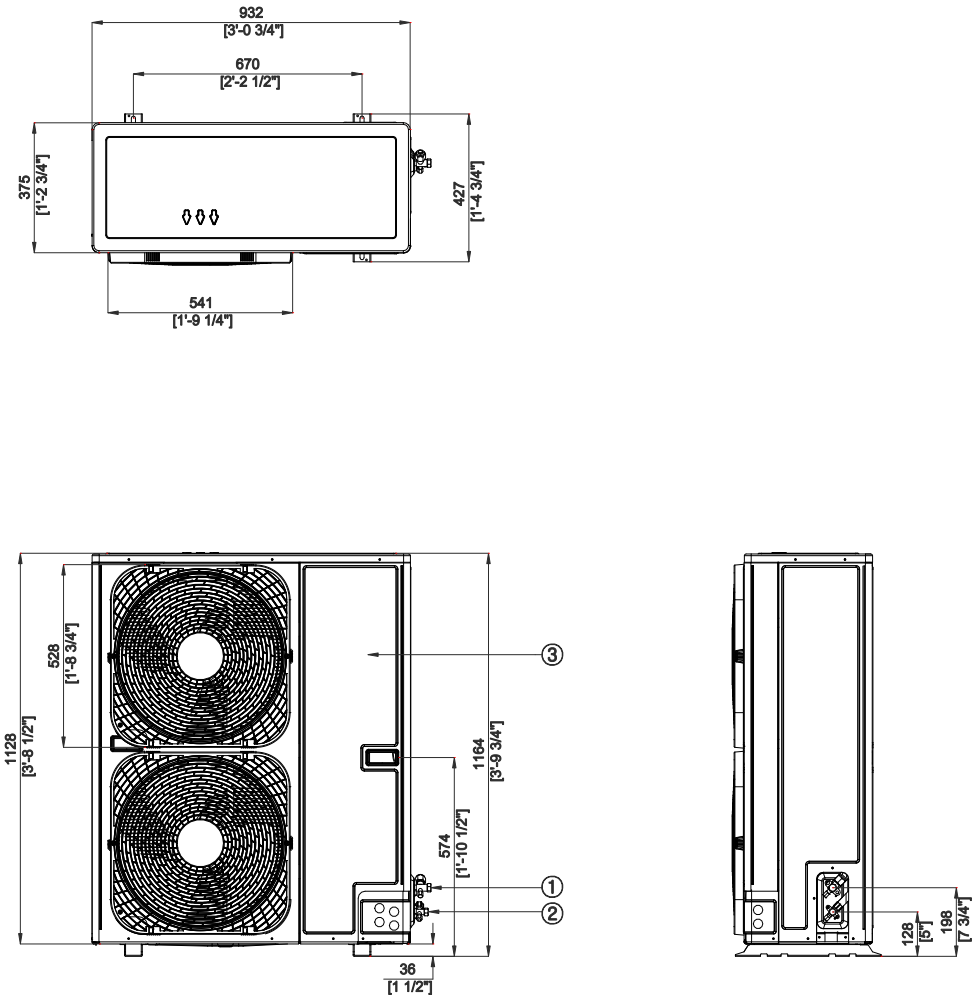

Table of descriptions			
1	Refrigerant gas pipe	7	
2	Refrigerant liquid pipe	8	
3	Power & Comm. wiring conduits	9	
4		10	
5		11	
6		12	

5 Electrical wiring diagram

Indoor : 4 Way Cassette S

AC052JN4DEH/AF, AC071JN4DEH/AF, AC090JN4DEH/AF, AC100JN4DEH/AF, AC120JN4DEH/AF, AC140JN4DEH/AF

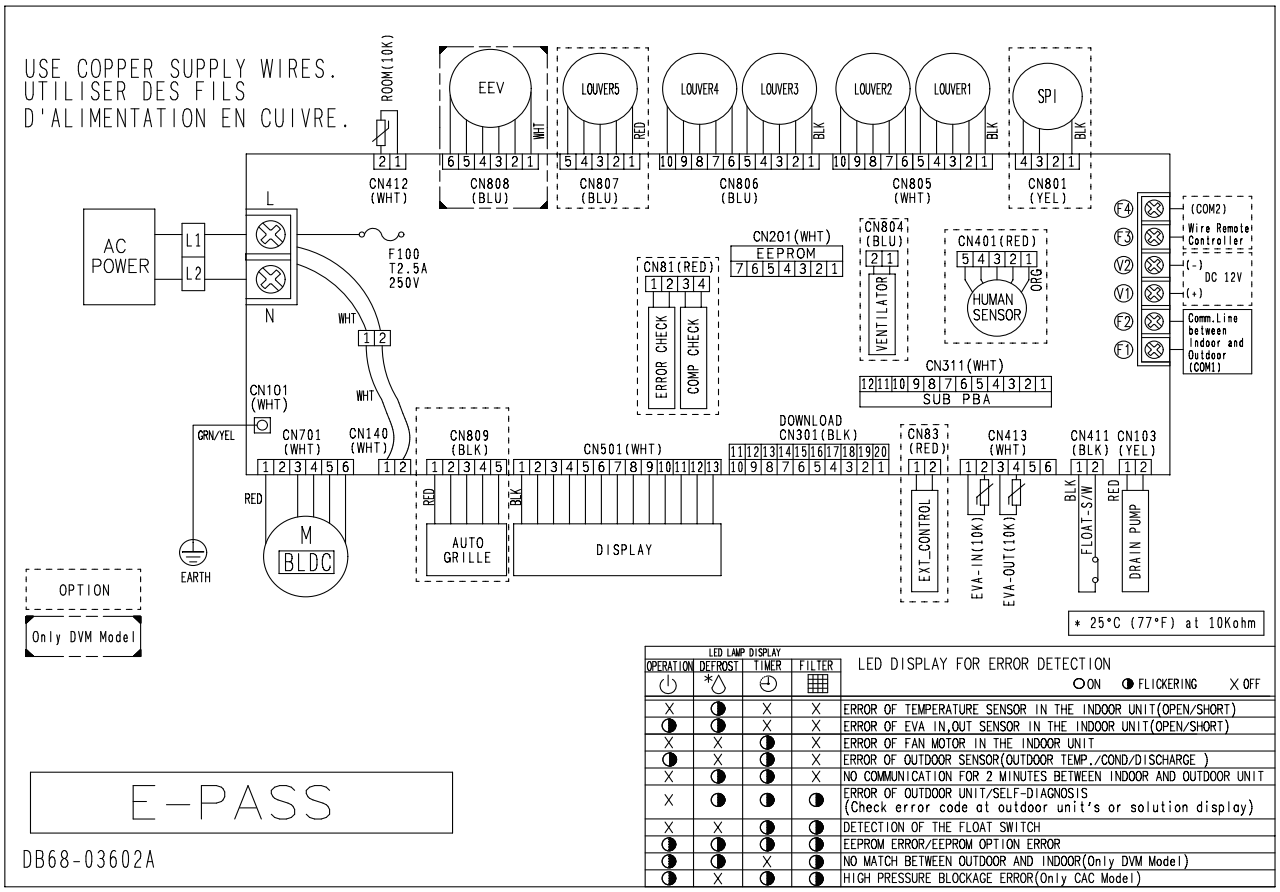

LED LAMP DISPLAY OPERATION	DEFROST	TIMER	FILTER	LED DISPLAY FOR ERROR DETECTION (○ON ◑FLICKERING X OFF)
X	◑	X	X	ERROR OF TEMPERATURE SENSOR IN THE INDOOR UNIT(OPEN/SHORT)
◑	◑	X	X	ERROR OF EVA IN,OUT SENSOR IN THE INDOOR UNIT(OPEN/SHORT)
X	X	◑	X	ERROR OF FAN MOTOR IN THE INDOOR UNIT
◑	X	◑	X	ERROR OF OUTDOOR SENSOR(OUTDOOR TEMP./COND/DISCHARGE)
X	◑	◑	X	NO COMMUNICATION FOR 2 MINUTES BETWEEN INDOOR AND OUTDOOR UNIT
X	◑	◑	◑	ERROR OF OUTDOOR UNIT/SELF-DIAGNOSIS (Check error code at outdoor unit's or solution display)
X	X	◑	◑	DETECTION OF THE FLOAT SWITCH
◑	◑	◑	◑	EEPROM ERROR/EEPROM OPTION ERROR
◑	◑	X	◑	NO MATCH BETWEEN OUTDOOR AND INDOOR(Only DVM Model)
◑	X	◑	◑	HIGH PRESSURE BLOCKAGE ERROR(Only CAC Model)

5 Electrical wiring diagram

Outdoor

AC052JX4DEH/AF

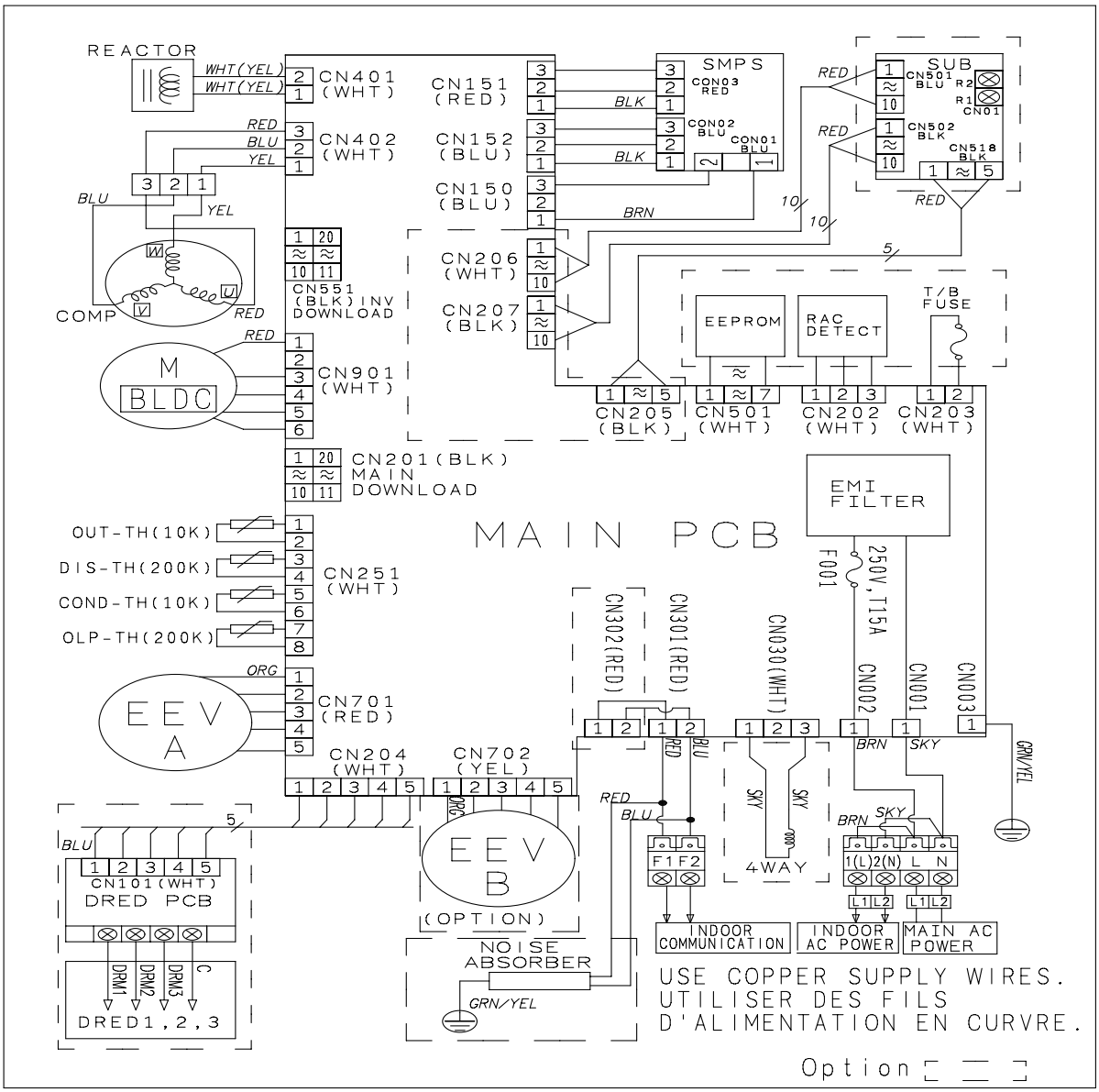

5 Electrical wiring diagram

Outdoor

AC071JX4DEH/AF

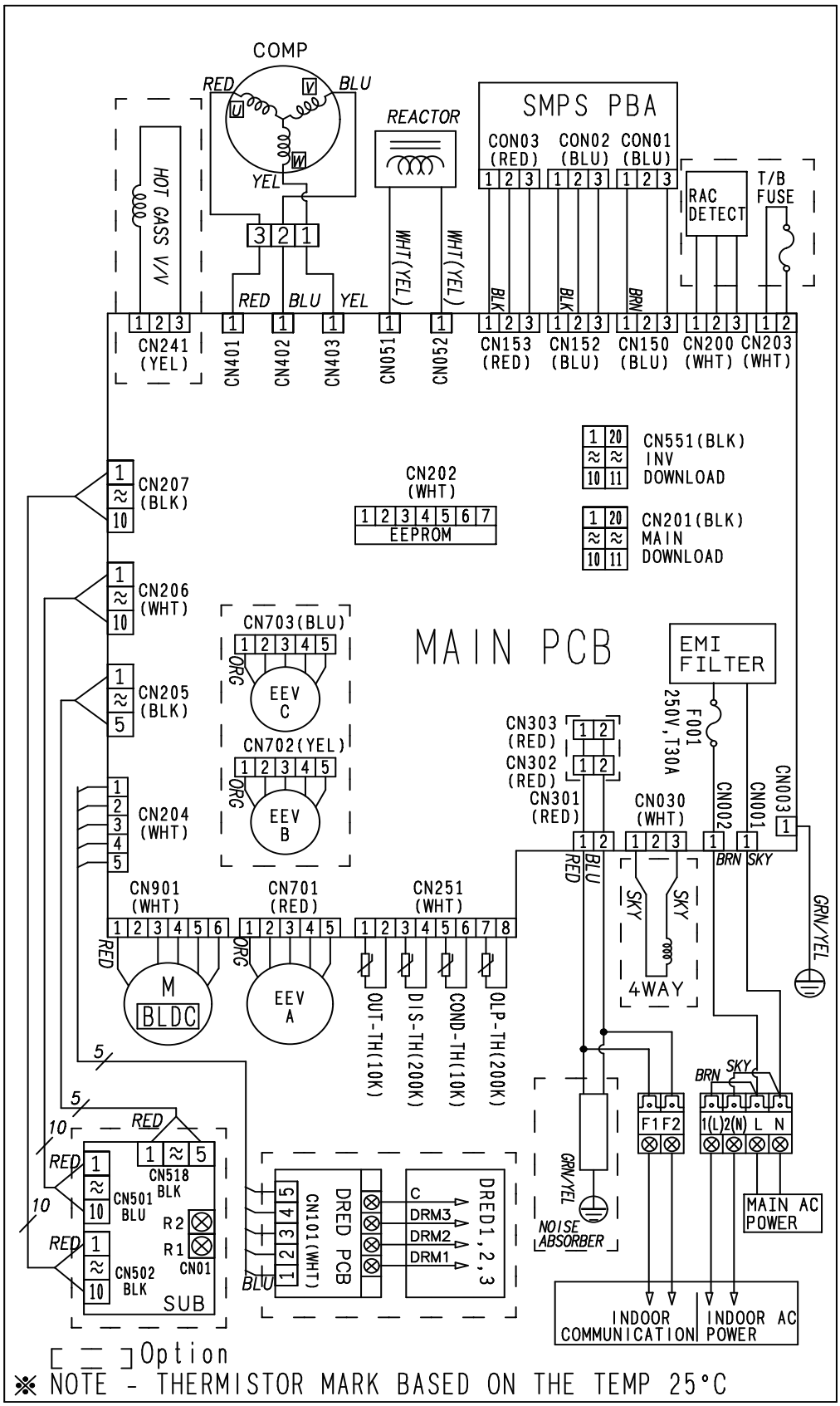

5 Electrical wiring diagram

Outdoor

AC090JX4DEH/AF, AC100JX4DEH/AF

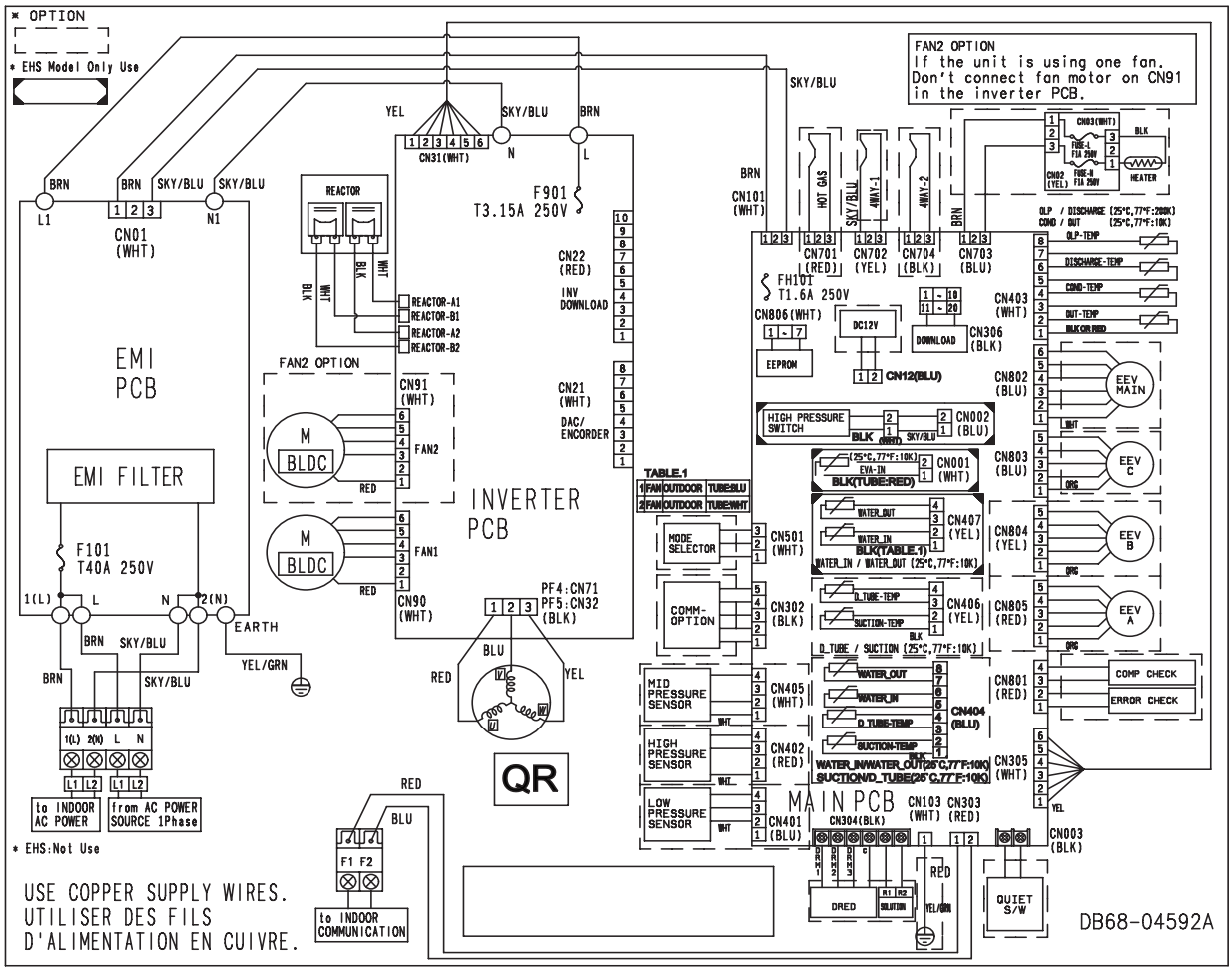

5 Electrical wiring diagram

Outdoor

AC100JX4DGH/AF, AC120JX4DGH/AF, AC140JX4DGH/AF

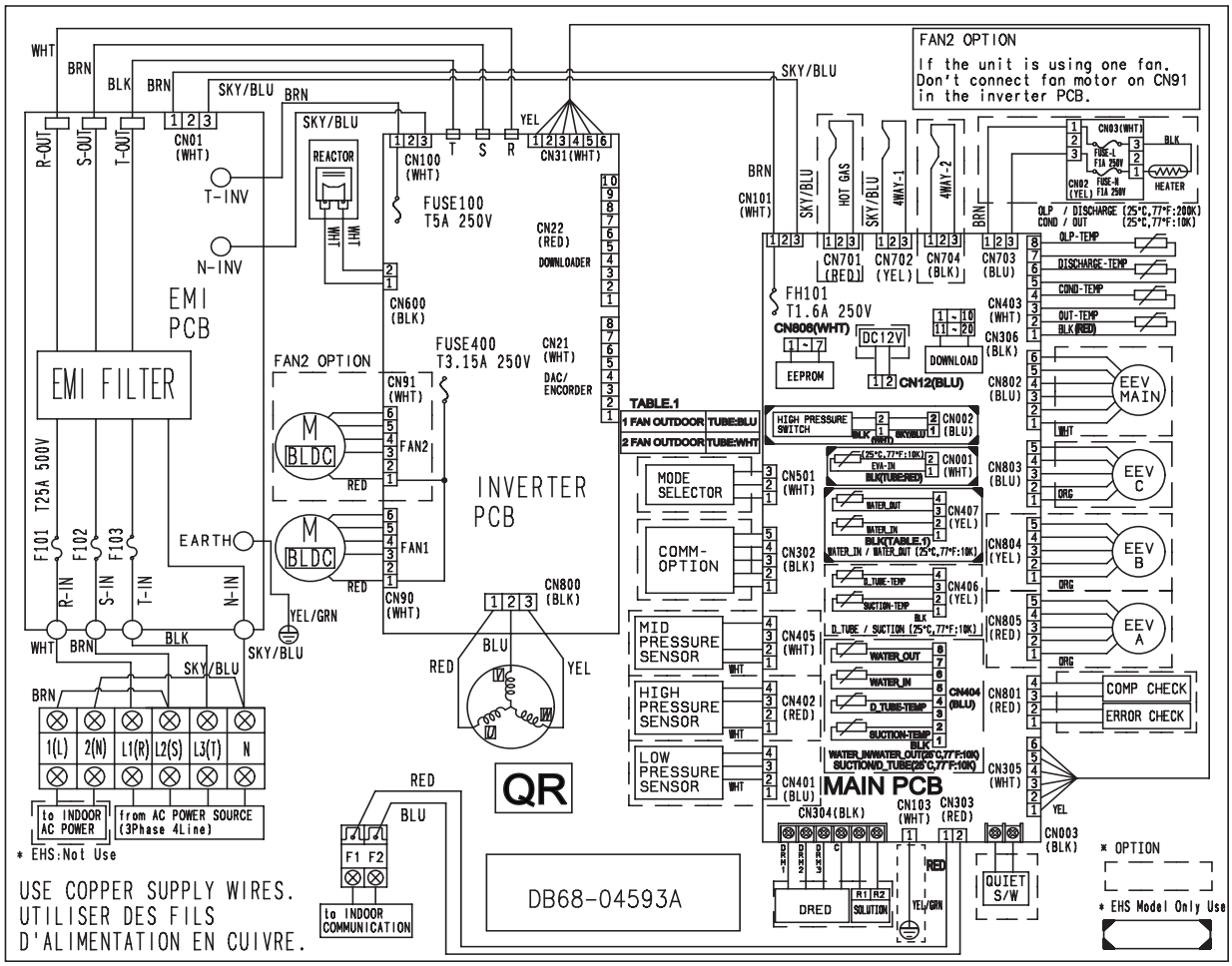

6 Sound pressure level

Indoor : 4 Way Cassette S

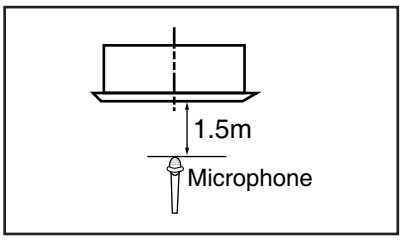

Unit: dB(A)

Model	High	Low
AC052JN4DEH/AF (ODU : AC052JX4DEH/AF)	37	31
AC071JN4DEH/AF (ODU : AC071JX4DEH/AF)	43	37
AC090JN4DEH/AF (ODU : AC090JX4DEH/AF)	42	33
AC100JN4DEH/AF (ODU : AC100JX4DGH/AF)	43	33

Note

* Specifications may be subject to change without prior notice

1) These operation values were obtained in an anechoic room.

2) Sound pressure level will vary depending on a range of factors such as the construction of the particular room where the equipment is installed.

3) Operation sound level may differ depending on operation and ambient conditions.

NC curve

1) AC052JN4DEH/AF (ODU : AC052JX4DEH/AF)

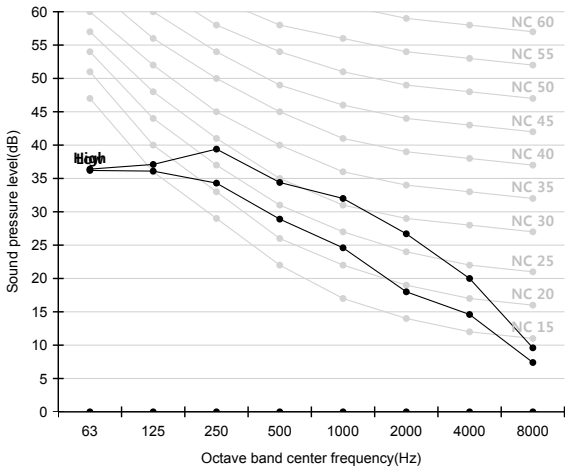

2) AC071JN4DEH/AF (ODU : AC071JX4DEH/AF)

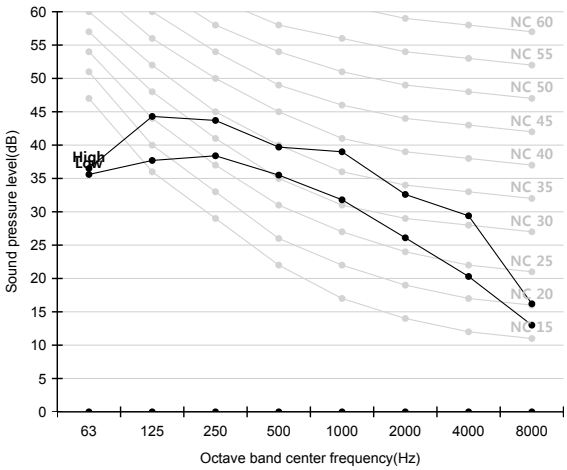

3) AC090JN4DEH/AF (ODU : AC090JX4DEH/AF)

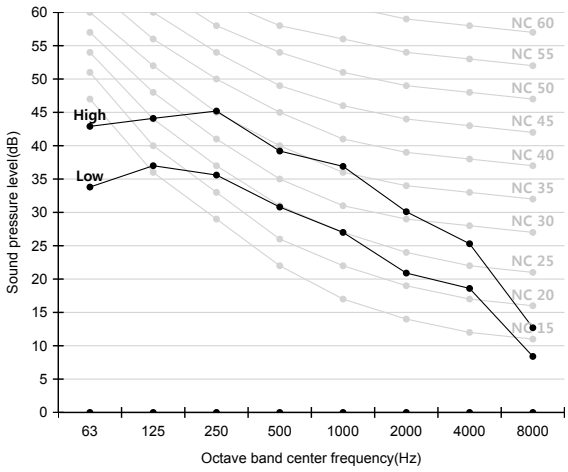

4) AC100JN4DEH/AF (ODU : AC100JX4DGH/AF)

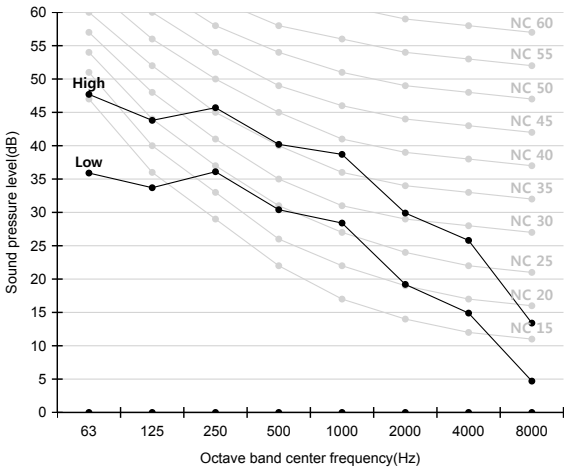

6 Sound pressure level

Indoor : 4 Way Cassette S

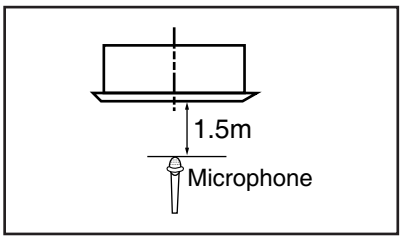

Unit: dB(A)

Model	High	Low
AC100JN4DEH/AF (ODU : AC100JX4DEH/AF)	43	33
AC120JN4DEH/AF (ODU : AC120JX4DGH/AF)	44	36
AC140JN4DEH/AF (ODU : AC140JX4DGH/AF)	45	36

Note

* Specifications may be subject to change without prior notice

1) These operation values were obtained in an anechoic room.

2) Sound pressure level will vary depending on a range of factors such as the construction of the particular room where the equipment is installed.

3) Operation sound level may differ depending on operation and ambient conditions.

NC curve

1) AC100JN4DEH/AF (ODU : AC100JX4DEH/AF)

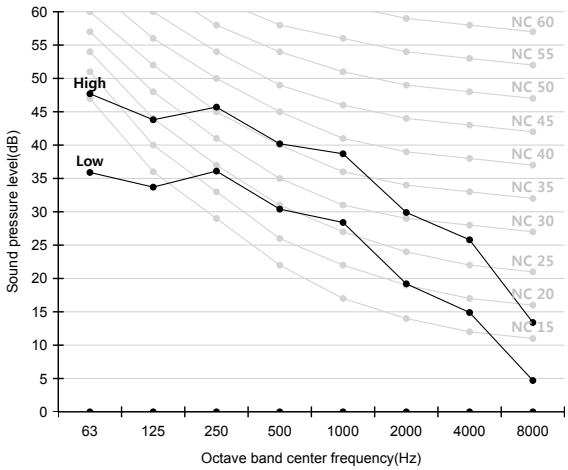

2) AC120JN4DEH/AF (ODU : AC120JX4DGH/AF)

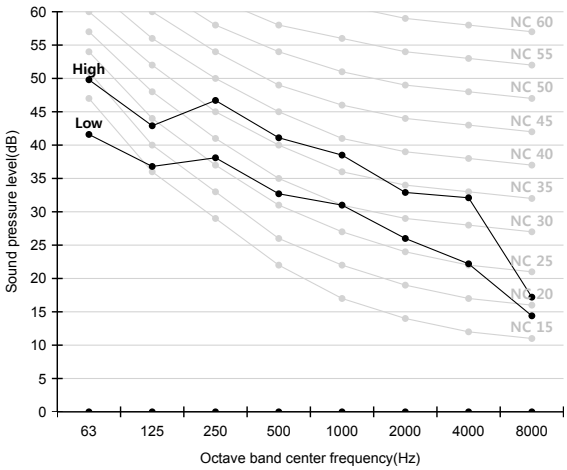

3) AC140JN4DEH/AF (ODU : AC140JX4DGH/AF)

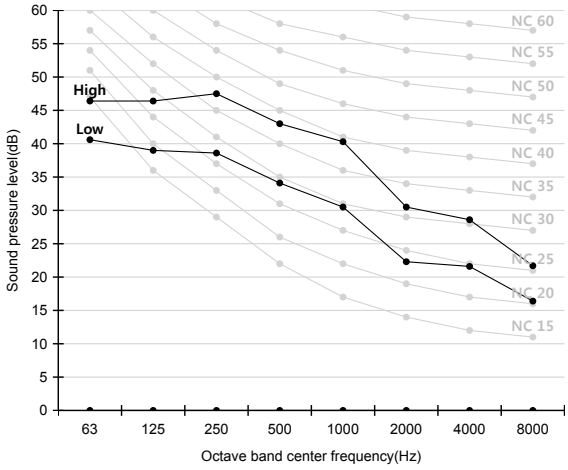

6 Sound pressure level

Outdoor

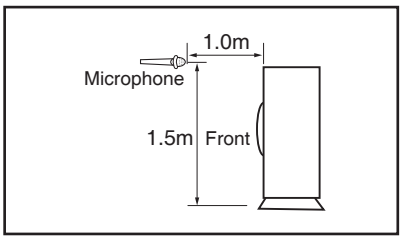

Unit: dB(A)

Model	Cooling
AC052JX4DEH/AF (IDU : AC052JN4DEH/AF)	47
AC071JX4DEH/AF (IDU : AC071JN4DEH/AF)	49
AC090JX4DEH/AF (IDU : AC090JN4DEH/AF)	54
AC100JX4DGH/AF (IDU : AC100JN4DEH/AF)	55

Note

* Specifications may be subject to change without prior notice

1) These operation values were obtained in an anechoic room.

2) Sound pressure level will vary depending on a range of factors such as the construction of the particular room where the equipment is installed.

3) Operation sound level may differ depending on operation and ambient conditions.

NC curve

1) AC052JX4DEH/AF (IDU : AC052JN4DEH/AF)

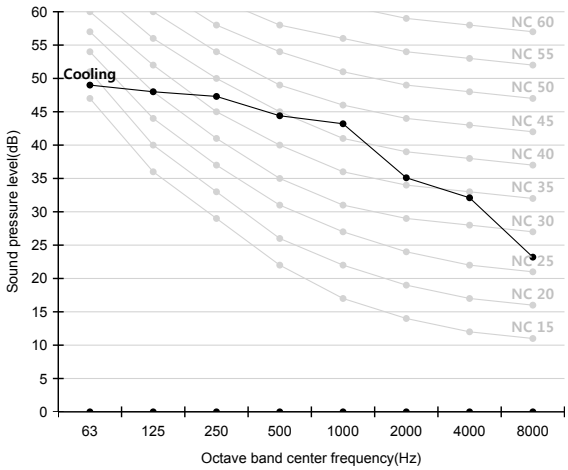

2) AC071JX4DEH/AF (IDU : AC071JN4DEH/AF)

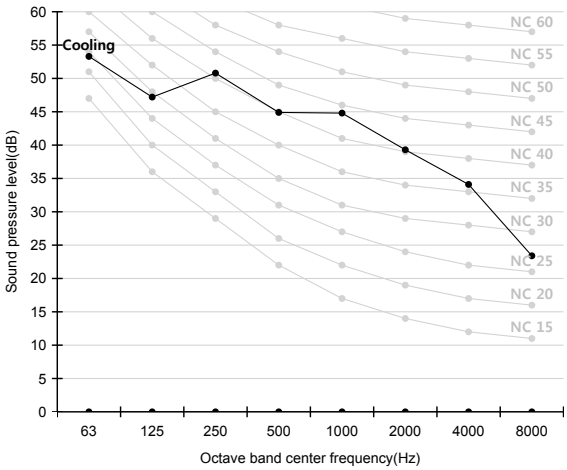

3) AC090JX4DEH/AF (IDU : AC090JN4DEH/AF)

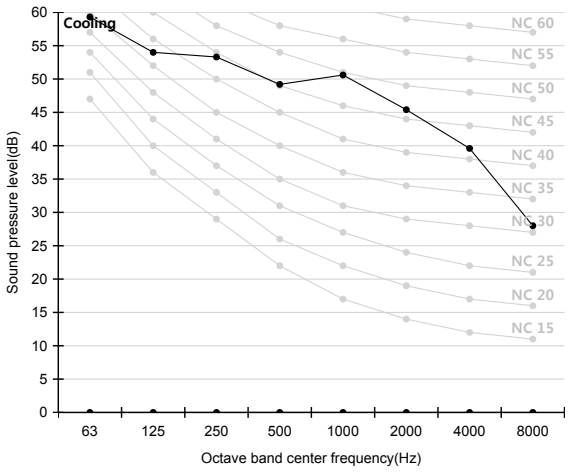

4) AC100JX4DGH/AF (IDU : AC100JN4DEH/AF)

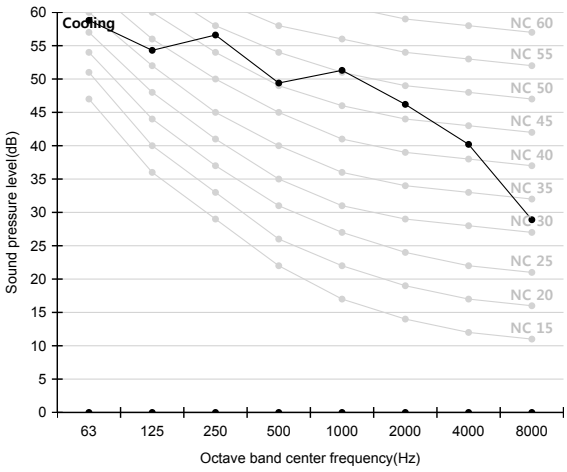

6 Sound pressure level

Outdoor

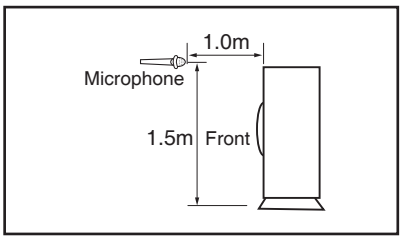

Unit: dB(A)

Model	Cooling
AC100JX4DEH/AF (IDU : AC100JN4DEH/AF)	55
AC120JX4DGH/AF (IDU : AC120JN4DEH/AF)	57
AC140JX4DGH/AF (IDU : AC140JN4DEH/AF)	57

Note

* Specifications may be subject to change without prior notice

1) These operation values were obtained in an anechoic room.

2) Sound pressure level will vary depending on a range of factors such as the construction of the particular room where the equipment is installed.

3) Operation sound level may differ depending on operation and ambient conditions.

NC curve

1) AC100JX4DEH/AF (IDU : AC100JN4DEH/AF)

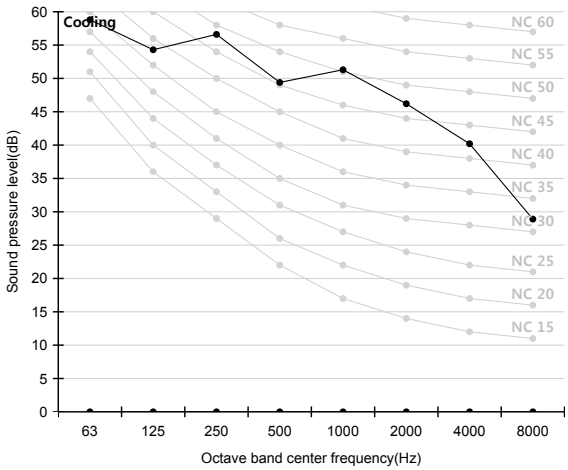

2) AC120JX4DGH/AF (IDU : AC120JN4DEH/AF)

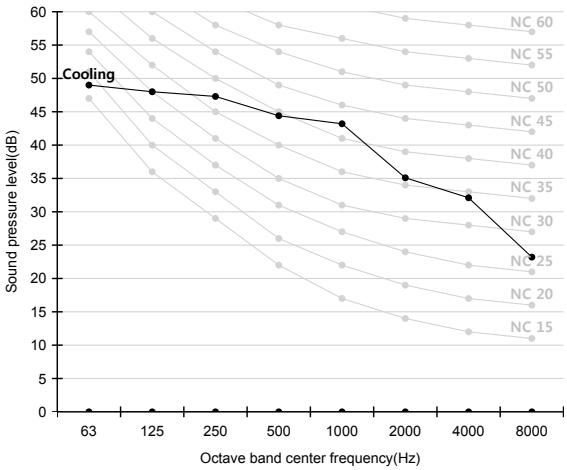

3) AC140JX4DGH/AF (IDU : AC140JN4DEH/AF)

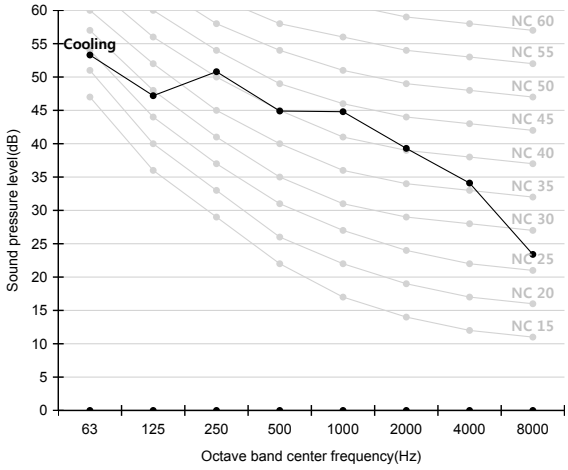

7 Piping diagram

Outdoor unit

AC052JX4DEH/AF, AC071JX4DEH/AF

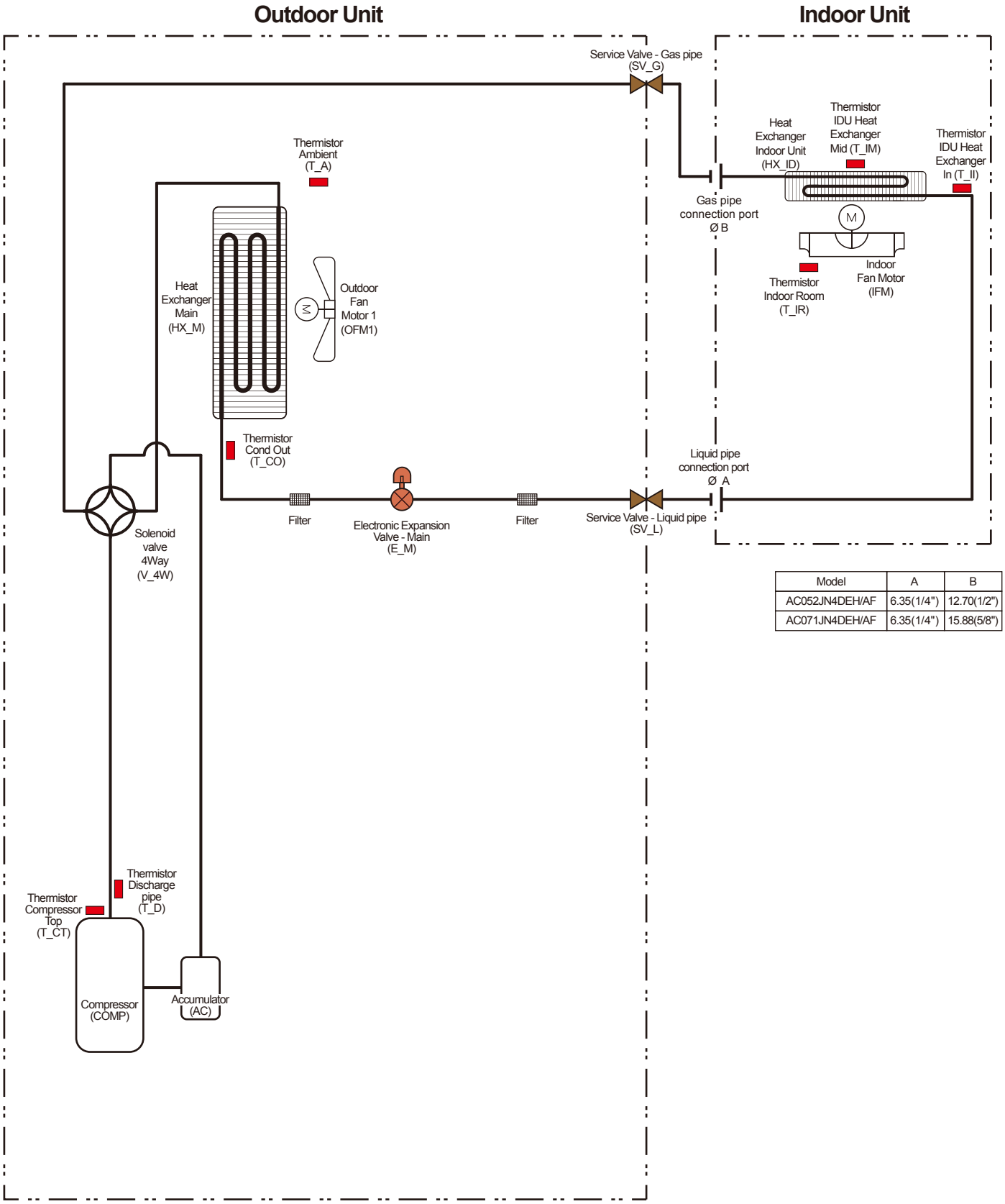

Model	A	B
AC052JN4DEH/AF	6.35(1/4")	12.70(1/2")
AC071JN4DEH/AF	6.35(1/4")	15.88(5/8")

7 Piping diagram

Outdoor unit

AC090JX4DEH/AF, AC100JX4DEH/AF, AC100JX4DGH/AF

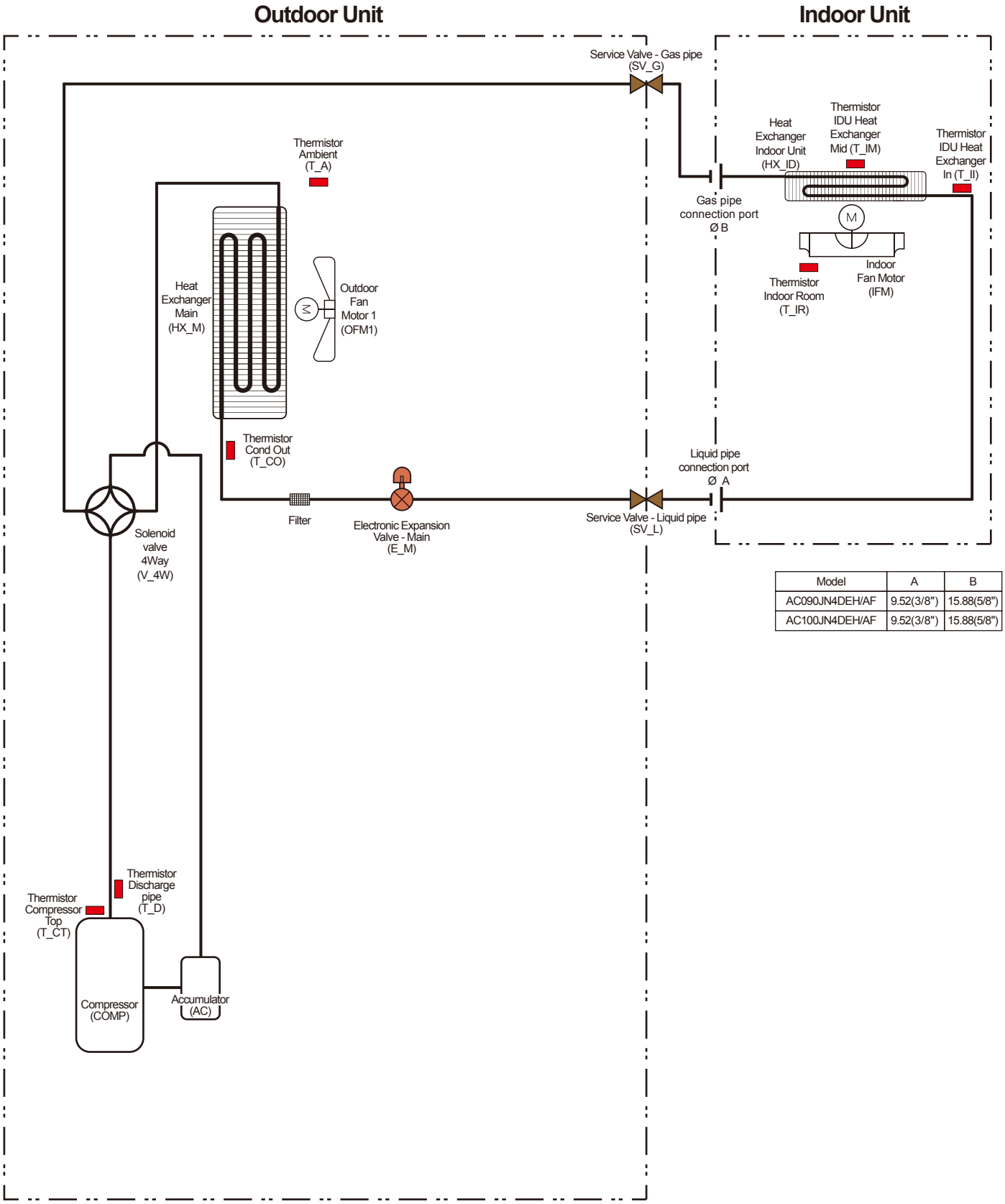

Model	A	B
AC090JN4DEH/AF	9.52(3/8")	15.88(5/8")
AC100JN4DEH/AF	9.52(3/8")	15.88(5/8")

7 Piping diagram

Outdoor unit

AC120JX4DGH/AF, AC140JX4DGH/AF

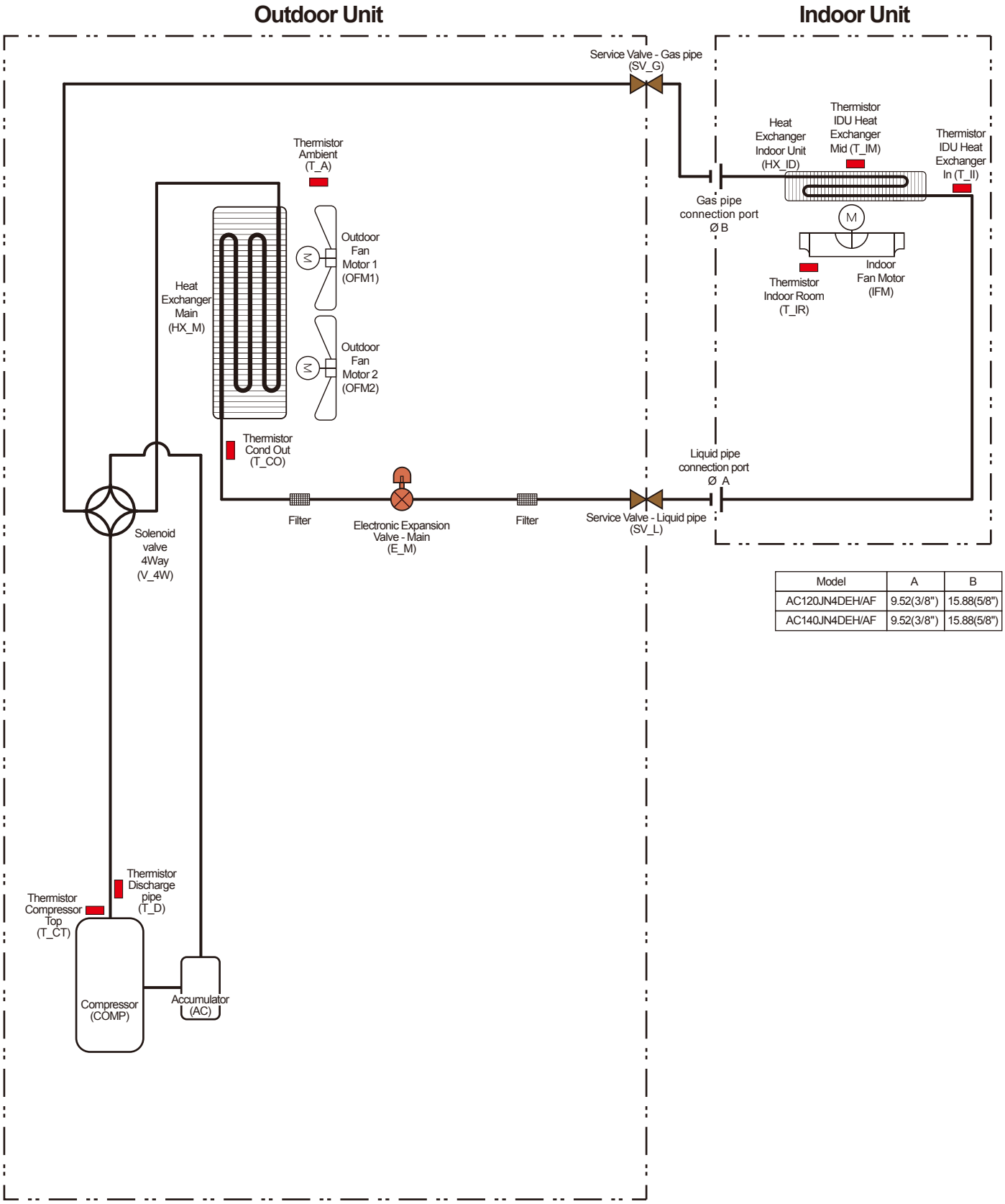

Model	A	B
AC120JN4DEH/AF	9.52(3/8")	15.88(5/8")
AC140JN4DEH/AF	9.52(3/8")	15.88(5/8")

8 Capacity correction

Outdoor

AC052JN4DEH/AF + AC052JX4DEH/AF

Cooling

Level Difference (m)	Pipe Length (m)														
	5	10	15	20	25	30	35	40	45	50	55	60	65	70	75
30	-	-	-	-	-	-	-	-	-	-	-	-	-	-	-
25	-	-	-	-	-	-	-	-	-	-	-	-	-	-	-
20	-	-	-	-	-	-	-	-	-	-	-	-	-	-	-
15	-	-	0.97	0.95	0.94	0.92	-	-	-	-	-	-	-	-	-
10	-	0.98	0.97	0.95	0.94	0.92	-	-	-	-	-	-	-	-	-
5	1.00	0.98	0.97	0.95	0.94	0.92	-	-	-	-	-	-	-	-	-
0	1.00	0.98	0.97	0.95	0.94	0.92	-	-	-	-	-	-	-	-	-
-5	1.00	0.98	0.96	0.95	0.93	0.92	-	-	-	-	-	-	-	-	-
-10	-	0.97	0.96	0.94	0.93	0.92	-	-	-	-	-	-	-	-	-
-15	-	-	0.95	0.94	0.92	0.91	-	-	-	-	-	-	-	-	-
-20	-	-	-	-	-	-	-	-	-	-	-	-	-	-	-

Heating

Level Difference (m)	Pipe Length (m)														
	5	10	15	20	25	30	35	40	45	50	55	60	65	70	75
30	-	-	-	-	-	-	-	-	-	-	-	-	-	-	-
25	-	-	-	-	-	-	-	-	-	-	-	-	-	-	-
20	-	-	-	-	-	-	-	-	-	-	-	-	-	-	-
15	-	-	0.96	0.94	0.92	0.90	-	-	-	-	-	-	-	-	-
10	-	0.98	0.96	0.94	0.92	0.90	-	-	-	-	-	-	-	-	-
5	1.00	0.98	0.96	0.94	0.92	0.90	-	-	-	-	-	-	-	-	-
0	1.00	0.98	0.96	0.94	0.92	0.90	-	-	-	-	-	-	-	-	-
-5	1.00	0.98	0.96	0.94	0.92	0.90	-	-	-	-	-	-	-	-	-
-10	-	0.98	0.96	0.94	0.92	0.90	-	-	-	-	-	-	-	-	-
-15	-	-	0.96	0.94	0.92	0.90	-	-	-	-	-	-	-	-	-
-20	-	-	-	-	-	-	-	-	-	-	-	-	-	-	-

AC071JN4DEH/AF + AC071JX4DEH/AF

Cooling

Level Difference (m)	Pipe Length (m)														
	5	10	15	20	25	30	35	40	45	50	55	60	65	70	75
30	-	-	-	-	-	-	-	-	-	-	-	-	-	-	-
25	-	-	-	-	-	-	-	-	-	-	-	-	-	-	-
20	-	-	-	-	-	-	-	-	-	-	-	-	-	-	-
15	-	-	0.97	0.95	0.94	0.92	-	-	-	-	-	-	-	-	-
10	-	0.98	0.97	0.95	0.94	0.92	-	-	-	-	-	-	-	-	-
5	1.00	0.98	0.97	0.95	0.94	0.92	-	-	-	-	-	-	-	-	-
0	1.00	0.98	0.97	0.95	0.94	0.92	-	-	-	-	-	-	-	-	-
-5	1.00	0.98	0.96	0.95	0.93	0.92	-	-	-	-	-	-	-	-	-
-10	-	0.97	0.96	0.94	0.93	0.92	-	-	-	-	-	-	-	-	-
-15	-	-	0.95	0.94	0.92	0.91	-	-	-	-	-	-	-	-	-
-20	-	-	-	-	-	-	-	-	-	-	-	-	-	-	-

Heating

Level Difference (m)	Pipe Length (m)														
	5	10	15	20	25	30	35	40	45	50	55	60	65	70	75
30	-	-	-	-	-	-	-	-	-	-	-	-	-	-	-
25	-	-	-	-	-	-	-	-	-	-	-	-	-	-	-
20	-	-	-	-	-	-	-	-	-	-	-	-	-	-	-
15	-	-	0.96	0.94	0.92	0.90	-	-	-	-	-	-	-	-	-
10	-	0.98	0.96	0.94	0.92	0.90	-	-	-	-	-	-	-	-	-
5	1.00	0.98	0.96	0.94	0.92	0.90	-	-	-	-	-	-	-	-	-
0	1.00	0.98	0.96	0.94	0.92	0.90	-	-	-	-	-	-	-	-	-
-5	1.00	0.98	0.96	0.94	0.92	0.90	-	-	-	-	-	-	-	-	-
-10	-	0.98	0.96	0.94	0.92	0.90	-	-	-	-	-	-	-	-	-
-15	-	-	0.96	0.94	0.92	0.90	-	-	-	-	-	-	-	-	-
-20	-	-	-	-	-	-	-	-	-	-	-	-	-	-	-

Outdoor

AC090JN4DEH/AF + AC090JX4DEH/AF

Cooling

Level Difference (m)	Pipe Length (m) 5	10	15	20	25	30	35	40	45	50
30	-	-	-	-	-	0.95	0.94	0.93	0.92	0.90
25	-	-	-	-	0.96	0.95	0.94	0.93	0.92	0.90
20	-	-	-	0.97	0.96	0.95	0.94	0.93	0.92	0.90
15	-	-	0.98	0.97	0.96	0.95	0.94	0.93	0.92	0.90
10	-	0.99	0.98	0.97	0.96	0.95	0.94	0.93	0.92	0.90
5	1.00	0.99	0.98	0.97	0.96	0.95	0.94	0.93	0.92	0.90
0	1.00	0.99	0.98	0.97	0.96	0.95	0.94	0.93	0.92	0.90
-5	1.00	0.99	0.98	0.97	0.96	0.95	0.94	0.92	0.91	0.89
-10	-	0.98	0.97	0.96	0.95	0.94	0.93	0.92	0.90	0.88
-15	-	-	0.97	0.96	0.95	0.94	0.93	0.91	0.89	0.87
-20	-	-	-	0.96	0.95	0.93	0.92	0.91	0.88	0.85
-25	-	-	-	-	0.94	0.93	0.92	0.90	0.87	0.84
-30	-	-	-	-	-	0.93	0.91	0.89	0.87	0.83

Heating

Level Difference (m)	Pipe Length (m) 5	10	15	20	25	30	35	40	45	50
30	-	-	-	-	-	0.97	0.96	0.95	0.94	0.93
25	-	-	-	-	0.97	0.97	0.96	0.95	0.94	0.93
20	-	-	-	0.98	0.97	0.97	0.96	0.95	0.94	0.93
15	-	-	0.99	0.98	0.97	0.97	0.96	0.95	0.94	0.93
10	-	0.99	0.99	0.98	0.97	0.97	0.96	0.95	0.94	0.93
5	1.00	0.99	0.99	0.98	0.97	0.97	0.96	0.95	0.94	0.93
0	1.00	0.99	0.99	0.98	0.97	0.97	0.96	0.95	0.94	0.93
-5	1.00	0.99	0.99	0.98	0.97	0.97	0.96	0.95	0.94	0.93
-10	-	0.99	0.99	0.98	0.97	0.97	0.96	0.95	0.94	0.93
-15	-	-	0.99	0.98	0.97	0.97	0.96	0.95	0.94	0.93
-20	-	-	-	0.98	0.97	0.97	0.96	0.95	0.94	0.93
-25	-	-	-	-	0.97	0.97	0.96	0.95	0.94	0.93
-30	-	-	-	-	-	0.97	0.96	0.95	0.94	0.93

AC100JN4DEH/AF + AC100JX4DEH/AF

Cooling

Level Difference (m)	Pipe Length (m) 5	10	15	20	25	30	35	40	45	50
30	-	-	-	-	-	0.96	0.95	0.94	0.93	0.91
25	-	-	-	-	0.96	0.96	0.95	0.94	0.93	0.91
20	-	-	-	0.97	0.96	0.96	0.95	0.94	0.93	0.91
15	-	-	0.98	0.97	0.96	0.96	0.95	0.94	0.93	0.91
10	-	0.99	0.98	0.97	0.96	0.96	0.95	0.94	0.93	0.91
5	1.00	0.99	0.98	0.97	0.96	0.96	0.95	0.94	0.93	0.91
0	1.00	0.99	0.98	0.97	0.96	0.96	0.95	0.94	0.93	0.91
-5	1.00	0.99	0.98	0.97	0.96	0.95	0.94	0.93	0.92	0.90
-10	-	0.98	0.98	0.97	0.96	0.95	0.94	0.92	0.91	0.89
-15	-	-	0.97	0.96	0.95	0.94	0.93	0.92	0.90	0.88
-20	-	-	-	0.96	0.95	0.94	0.93	0.91	0.89	0.86
-25	-	-	-	-	0.95	0.93	0.92	0.91	0.88	0.85
-30	-	-	-	-	-	0.93	0.92	0.90	0.88	0.83

Heating

Level Difference (m)	Pipe Length (m) 5	10	15	20	25	30	35	40	45	50
30	-	-	-	-	-	0.97	0.96	0.95	0.94	0.93
25	-	-	-	-	0.97	0.97	0.96	0.95	0.94	0.93
20	-	-	-	0.98	0.97	0.97	0.96	0.95	0.94	0.93
15	-	-	0.99	0.98	0.97	0.97	0.96	0.95	0.94	0.93
10	-	0.99	0.99	0.98	0.97	0.97	0.96	0.95	0.94	0.93
5	1.00	0.99	0.99	0.98	0.97	0.97	0.96	0.95	0.94	0.93
0	1.00	0.99	0.99	0.98	0.97	0.97	0.96	0.95	0.94	0.93
-5	1.00	0.99	0.99	0.98	0.97	0.97	0.96	0.95	0.94	0.93
-10	-	0.99	0.99	0.98	0.97	0.97	0.96	0.95	0.94	0.93
-15	-	-	0.99	0.98	0.97	0.97	0.96	0.95	0.94	0.93
-20	-	-	-	0.98	0.97	0.97	0.96	0.95	0.94	0.93
-25	-	-	-	-	0.97	0.97	0.96	0.95	0.94	0.93
-30	-	-	-	-	-	0.97	0.96	0.95	0.94	0.93

Outdoor

AC100JN4DEH/AF + AC100JX4DGH/AF

Cooling

Level Difference (m)	Pipe Length (m) 5	10	15	20	25	30	35	40	45	50
30	-	-	-	-	-	0.96	0.95	0.94	0.93	0.91
25	-	-	-	-	0.96	0.96	0.95	0.94	0.93	0.91
20	-	-	-	0.97	0.96	0.96	0.95	0.94	0.93	0.91
15	-	-	0.98	0.97	0.96	0.96	0.95	0.94	0.93	0.91
10	-	0.99	0.98	0.97	0.96	0.96	0.95	0.94	0.93	0.91
5	1.00	0.99	0.98	0.97	0.96	0.96	0.95	0.94	0.93	0.91
0	1.00	0.99	0.98	0.97	0.96	0.96	0.95	0.94	0.93	0.91
-5	1.00	0.99	0.98	0.97	0.96	0.95	0.94	0.93	0.92	0.90
-10	-	0.98	0.98	0.97	0.96	0.95	0.94	0.92	0.91	0.89
-15	-	-	0.97	0.96	0.95	0.94	0.93	0.92	0.90	0.88
-20	-	-	-	0.96	0.95	0.94	0.93	0.91	0.89	0.86
-25	-	-	-	-	0.95	0.93	0.92	0.91	0.88	0.85
-30	-	-	-	-	-	0.93	0.92	0.90	0.88	0.83

Heating

Level Difference (m)	Pipe Length (m) 5	10	15	20	25	30	35	40	45	50
30	-	-	-	-	-	0.97	0.96	0.95	0.94	0.93
25	-	-	-	-	0.97	0.97	0.96	0.95	0.94	0.93
20	-	-	-	0.98	0.97	0.97	0.96	0.95	0.94	0.93
15	-	-	0.99	0.98	0.97	0.97	0.96	0.95	0.94	0.93
10	-	0.99	0.99	0.98	0.97	0.97	0.96	0.95	0.94	0.93
5	1.00	0.99	0.99	0.98	0.97	0.97	0.96	0.95	0.94	0.93
0	1.00	0.99	0.99	0.98	0.97	0.97	0.96	0.95	0.94	0.93
-5	1.00	0.99	0.99	0.98	0.97	0.97	0.96	0.95	0.94	0.93
-10	-	0.99	0.99	0.98	0.97	0.97	0.96	0.95	0.94	0.93
-15	-	-	0.99	0.98	0.97	0.97	0.96	0.95	0.94	0.93
-20	-	-	-	0.98	0.97	0.97	0.96	0.95	0.94	0.93
-25	-	-	-	-	0.97	0.97	0.96	0.95	0.94	0.93
-30	-	-	-	-	-	0.97	0.96	0.95	0.94	0.93

AC120JN4DEH/AF + AC120JX4DGH/AF

Cooling

Level Difference (m)	Pipe Length (m) 5	10	15	20	25	30	35	40	45	50
30	-	-	-	-	-	0.90	0.87	0.85	0.83	0.81
25	-	-	-	-	0.92	0.90	0.87	0.85	0.83	0.81
20	-	-	-	0.94	0.92	0.90	0.87	0.85	0.83	0.81
15	-	-	0.96	0.94	0.92	0.90	0.87	0.85	0.83	0.81
10	-	0.98	0.96	0.94	0.92	0.90	0.87	0.85	0.83	0.81
5	1.00	0.98	0.96	0.94	0.92	0.90	0.87	0.85	0.83	0.81
0	1.00	0.98	0.96	0.94	0.92	0.90	0.87	0.85	0.83	0.81
-5	1.00	0.97	0.96	0.94	0.92	0.90	0.87	0.85	0.83	0.81
-10	-	0.96	0.95	0.94	0.92	0.89	0.86	0.85	0.83	0.81
-15	-	-	0.95	0.93	0.92	0.89	0.86	0.84	0.82	0.80
-20	-	-	-	0.92	0.91	0.89	0.86	0.84	0.82	0.80
-25	-	-	-	-	0.90	0.88	0.85	0.83	0.81	0.79
-30	-	-	-	-	-	0.87	0.84	0.83	0.81	0.79

Heating

Level Difference (m)	Pipe Length (m) 5	10	15	20	25	30	35	40	45	50
30	-	-	-	-	-	0.91	0.89	0.87	0.85	0.83
25	-	-	-	-	0.92	0.91	0.89	0.87	0.85	0.83
20	-	-	-	0.94	0.92	0.91	0.89	0.87	0.85	0.83
15	-	-	0.96	0.94	0.92	0.91	0.89	0.87	0.85	0.83
10	-	0.98	0.96	0.94	0.92	0.91	0.89	0.87	0.85	0.83
5	1.00	0.98	0.96	0.94	0.92	0.91	0.89	0.87	0.85	0.83
0	1.00	0.98	0.96	0.94	0.92	0.91	0.89	0.87	0.85	0.83
-5	1.00	0.98	0.96	0.94	0.92	0.91	0.89	0.87	0.85	0.83
-10	-	0.98	0.96	0.94	0.92	0.91	0.89	0.87	0.85	0.83
-15	-	-	0.96	0.94	0.92	0.91	0.89	0.87	0.85	0.83
-20	-	-	-	0.94	0.92	0.91	0.89	0.87	0.85	0.83
-25	-	-	-	-	0.92	0.91	0.89	0.87	0.85	0.83
-30	-	-	-	-	-	0.91	0.89	0.87	0.85	0.83

8 Capacity correction

Outdoor

AC140JN4DEH/AF + AC140JX4DGH/AF

Cooling

Level Difference (m)	Pipe Length (m)									
	5	10	15	20	25	30	35	40	45	50
30	-	-	-	-	-	0.87	0.84	0.82	0.79	0.77
25	-	-	-	-	0.90	0.87	0.84	0.82	0.79	0.77
20	-	-	-	0.92	0.90	0.87	0.84	0.82	0.79	0.77
15	-	-	0.95	0.92	0.90	0.87	0.84	0.82	0.79	0.77
10	-	0.97	0.95	0.92	0.90	0.87	0.84	0.82	0.79	0.77
5	1.00	0.97	0.95	0.92	0.90	0.87	0.84	0.82	0.79	0.77
0	1.00	0.97	0.95	0.92	0.90	0.87	0.84	0.82	0.79	0.77
-5	1.00	0.97	0.95	0.92	0.90	0.87	0.84	0.82	0.79	0.77
-10	-	0.96	0.94	0.92	0.90	0.87	0.84	0.82	0.79	0.77
-15	-	-	0.93	0.91	0.89	0.86	0.83	0.82	0.79	0.77
-20	-	-	-	0.90	0.89	0.86	0.83	0.81	0.78	0.76
-25	-	-	-	-	0.89	0.86	0.83	0.81	0.78	0.76
-30	-	-	-	-	-	0.85	0.82	0.80	0.78	0.76

Heating

Level Difference (m)	Pipe Length (m)									
	5	10	15	20	25	30	35	40	45	50
30	-	-	-	-	-	0.90	0.88	0.86	0.84	0.82
25	-	-	-	-	0.92	0.90	0.88	0.86	0.84	0.82
20	-	-	-	0.94	0.92	0.90	0.88	0.86	0.84	0.82
15	-	-	0.96	0.94	0.92	0.90	0.88	0.86	0.84	0.82
10	-	0.98	0.96	0.94	0.92	0.90	0.88	0.86	0.84	0.82
5	1.00	0.98	0.96	0.94	0.92	0.90	0.88	0.86	0.84	0.82
0	1.00	0.98	0.96	0.94	0.92	0.90	0.88	0.86	0.84	0.82
-5	1.00	0.98	0.96	0.94	0.92	0.90	0.88	0.86	0.84	0.82
-10	-	0.98	0.96	0.94	0.92	0.90	0.88	0.86	0.84	0.82
-15	-	-	0.96	0.94	0.92	0.90	0.88	0.86	0.84	0.82
-20	-	-	-	0.94	0.92	0.90	0.88	0.86	0.84	0.82
-25	-	-	-	-	0.92	0.90	0.88	0.86	0.84	0.82
-30	-	-	-	-	-	0.90	0.88	0.86	0.84	0.82

SAMSUNG

2016.9
Ver.1.2

Samsung Electronics Co., LTD.
B2B PM / SE
Head Office (Suwon Korea) 129, Samsung-Ro, Yeongtong-Gu, Suwon City, Gyeonggi-Do, Korea 443-742
Website : www.samsung.com Email : airconditioner@samsung.com
Images and data in this book may subject to change without prior notice.

SAMSUNG