SAMSUNG

FJM Technical Data Book

Free Joint Multi for Global (R410A, 50Hz, HP)

Model : Outdoor unit (AJ***TXJ*KH/EA)
Indoor unit (Wall-mounted, Wind-Free 1Way Cassette, Wind-Free 4Way Cassette(600x600), Duct)

History

Version	Modification	Date	Remark
Ver.1.0	Released FJM for Global TDB	20. 07. 03	
Ver.2.0	Updated the Home duct New Line up	20. 08. 26	

Nomenclature

Outdoor Unit

Model Name

AJ	040	T	X	J	2	K	H	/	EA
(1)	(2)	(3)	(4)	(5)	(6)	(7)	(8)		Buyer

(1) Classification

AC	CAC
AM	DVM
AJ	FJM (Free Joint Multi)
AE	EHS

(2) Capacity

X 1/10 kW (3 digits)

(3) Version

R	2019
T	2020

(4) Product Type

S	SET (NASA)
N	Indoor Unit (NASA)
X	Outdoor Unit (NASA)
A	SET (Non NASA)
B	Indoor Unit (Non NASA)
C	Outdoor Unit (Non NASA)

(5) Product Notation

J	Free Joint Multi
P	Pack Multi
H	DVM Home

(6) Feature

2	2 Room
3	3 Room
4	4 Room
5	5 Room

(7) Rating Voltage

A	115V, 60Hz
B	220V, 60Hz
C	208~230V, 60Hz
D	200~220V, 50Hz
E	220~240V, 50Hz
K	220~240V, 50/60Hz

(8) Mode

C	Cooling Only (R410A)
H	Heat Pump (R410A)
F	Cooling Only (R32)
G	Heat Pump (R32)

Nomenclature

Indoor Unit

Model Name

AJ	020	T	N	T	D	K	H	/	EA
(1)	(2)	(3)	(4)	(5)	(6)	(7)	(8)		Buyer

(1) Classification

AC	CAC
AM	DVM
AJ	FJM (Free Joint Multi)
AE	EHS

(2) Capacity

X 1/10 kW (3 digits)

(3) Version

R	2019
T	2020

(4) Product Type

S	SET (NASA)
N	Indoor Unit (NASA)
X	Outdoor Unit (NASA)
A	SET (Non NASA)
B	Indoor Unit (Non NASA)
C	Outdoor Unit (Non NASA)

(5) Product Notation

1	(Wind-Free) 1Way Cassette
N	(Wind-Free) 4Way Cassette (600x600)
L	Slim Duct
M	MSP Duct
T	Wall-mounted
A	Wind-Free Wall-mounted

(6) Feature

D	DELUXE
P	Premium

(7) Rating Voltage

A	115V, 60Hz
B	220V, 60Hz
C	208~230V, 60Hz
D	200~220V, 50Hz
E	220~240V, 50Hz
K	220~240V, 50/60Hz

(8) Mode

C	Cooling Only (R410A)
H	Heat Pump (R410A)
F	Cooling Only (R32)
G	Heat Pump (R32)

Features & Benefits

Universal Connection

A single outdoor unit supporting up to five indoor units, the FJM system is ideal for residential spaces with multiple rooms to increase space efficiency.

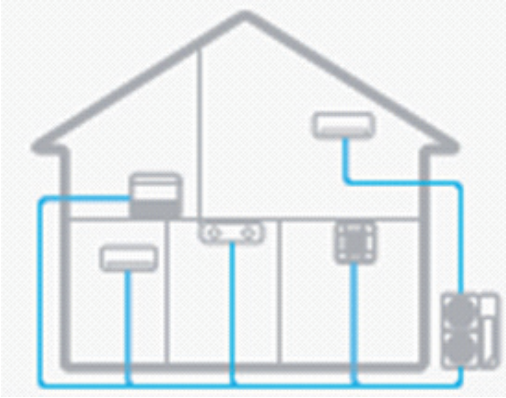

Unified Communication (NASA)

Communication way is unified to NASA and integrated control is available.

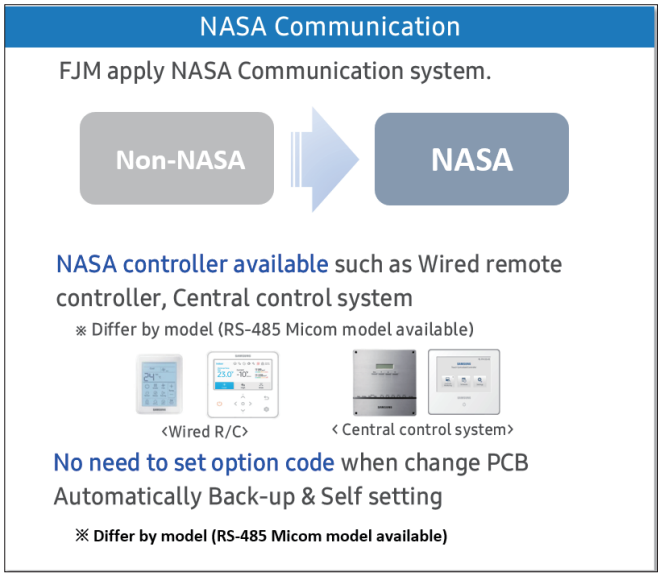

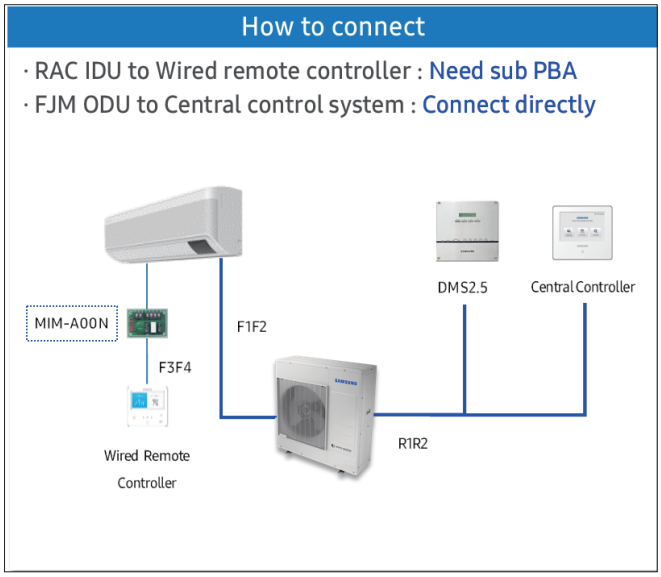

Auto addressing & Auto pipe inspection

It can automatically set the address of the indoor unit and inspect pipes with one push of the button.
Installation is very simple.

Features & Benefits

Samsung SmartThings (Optional)

Control the FJM with the SmartThings service.

* It needs to install Wi-Fi Kit.

Setting to Cool or Heat only mode

This function enables the indoor units connected to the outdoor unit to operate in a specific mode.
When you want to operate all indoor units with the cooling mode or heating mode.

Contents

1. Line-up	8
2. Specification	10
3. Electric Characteristics	36
4. Combination Table	37
5. Dimensional Drawing	65
6. Center of Gravity	78
7. Electrical Wiring Diagram	83
8. Sound Data	90
9. Fan Characteristics (PQ curve)	111
10. Operation Range	115
11. Piping Diagram	116
12. Capacity Table	124
13. Installation	489

1. Line-up

1-1. Outdoor units

Capacity (kW)	4 / 5	6.8 / 8	10	12.5 / 14
Image				
Model	AJ040TXJ2KH/EA AJ050TXJ2KH/EA	AJ068TXJ3KH/EA AJ080TXJ4KH/EA	AJ100TXJ5KH/EA	AJ125TXJ5KH/EA AJ140TXJ5KH/EA

1-2. Indoor units

Capacity (kW) / Type	2.0	2.5 (2.6)	3.5	5.0 (5.2)	6.5 (6.2)	7.1
AR9500 (Wind-Free GEO)						
AR5500 (GEO)						
Wind- Free 1Way Cassette						
Wind-Free 4Way Cassette (600x600)						
Home duct						

1. Line-up

1-3. Combination Table (Outdoor-Indoor)

Indoor Unit \ Outdoor Unit		Model							
			AJ040TXJ2KH/EA	AJ050TXJ2KH/EA	AJ068TXJ3KH/EA	AJ080TXJ4KH/EA	AJ100TXJ5KH/EA	AJ125TXJ5KH/EA	AJ140TXJ5KH/EA
Model		Capacity (kW)	4.0	5.0	6.8	8.0	10.0	12.5	14.0
AR9500 (Wind-Free GEO)	AJ020TNAPKH/** AJ025TNAPKH/** AJ035TNAPKH/** AJ050TNAPKH/** AJ068TNAPKH/**	2.0	●	●	●	●	●	●	●
		2.5	●	●	●	●	●	●	●
		3.5	●	●	●	●	●	●	●
		5.0		●	●	●	●	●	●
		6.2				●	●	●	●
AR5500 (GEO)	AJ020TNTDKH/** AJ025TNTDKH/** AJ035TNTDKH/** AJ050TNTDKH/** AJ068TNTDKH/**	2.0	●	●	●	●	●	●	●
		2.5	●	●	●	●	●	●	●
		3.5	●	●	●	●	●	●	●
		5.0		●	●	●	●	●	●
		6.5				●	●	●	●
Wind-Free 1Way Cassette	AJ026TN1DKH/EA AJ035TN1DKH/EA	2.6	●	●	●	●	●	●	●
		3.5	●	●	●	●	●	●	●
Wind-Free 4Way Cassette (600x600)	AJ020TNNDKH/EA AJ026TNNDKH/EA AJ035TNNDKH/EA AJ052TNNDKH/EA	2.0		●	●	●	●	●	●
		2.6		●	●	●	●	●	●
		3.5		●	●	●	●	●	●
		5.2		●	●	●	●	●	●
Home duct	AJ026TNL*KH/EA AJ035TNL*KH/EA AJ052TNL*KH/EA AJ071TNL*KH/EA	2.6		●	●	●	●	●	●
		3.5		●	●	●	●	●	●
		5.2		●	●	●	●	●	●
		7.1				●	●	●	●

2. Specification

2-1. Outdoor units

Type					FREE JOINT MULTI	FREE JOINT MULTI	FREE JOINT MULTI	FREE JOINT MULTI
Model Name					AJ040TXJ2KH/EA	AJ050TXJ2KH/EA	AJ068TXJ3KH/EA	AJ080TXJ4KH/EA
Power Supply				Φ, #, V, Hz	1,2,220~240,50/60	1,2,220~240,50/60	1,2,220~240,50/60	1,2,220~240,50/60
Mode				-	HEAT PUMP	HEAT PUMP	HEAT PUMP	HEAT PUMP
Performance	Capacity	Cooling		kW	4.0	5.0	6.8	8.0
				Btu/h	13,600	17,100	23,200	27,300
		Heating		kW	4.4	5.7	8.0	9.0
				Btu/h	15,000	19,400	27,300	30,700
Maximum number of connectable Indoor Units				EA	2	2	3	4
Power	Power Input (Nominal)	Cooling		kW	1.02	1.32	2.00	2.38
		Heating			0.99	1.35	1.91	2.13
	Current Input (Nominal)	Cooling		A	4.7	6.0	9.2	10.9
		Heating			4.5	6.2	8.7	9.7
	Current	MCA		A	9.3	11.9	15.2	18.2
		MFA		A	10.6	13.8	17.5	20.8
Efficiency	EER	Cooling		W/W	3.92	3.79	3.40	3.36
	COP	Heating		W/W	4.44	4.22	4.19	4.23
	SEER (Grade)			W/W	-	6.70(A++)	6.50(A++)	6.50(A++)
	SCOP (Grade)			W/W	-	4.01(A+)	4.00(A+)	3.90(A)
Casing	Material	Body		-	GI steel plate	GI steel plate	GI steel plate	GI steel plate
		Base		-	GI steel plate	GI steel plate	GI steel plate	GI steel plate
Heat Exchanger	Type			-	Fin & Tube	Fin & Tube	Fin & Tube	Fin & Tube
	Material	Fin		-	Al	Al	Al	Al
		Tube		-	Cu	Cu	Cu	Cu
	Fin Treatment			-	Anti-Corrosion	Anti-Corrosion	Anti-Corrosion	Anti-Corrosion
Compressor	Type			-	Twin BLDC Rotary	Twin BLDC Rotary	Twin BLDC Rotary	Twin BLDC Rotary
	Output			kW x n	4.57 x 1	4.57 x 1	5.92 x 1	7.77 x 1
	Model Name			-	UG9TK3150FE4	UG9TK3150FE4	UG4T200FUAE4	G8T260FUAEW
	Oil	Type		-	POE	POE	POE	POE
		Initial Charge		cc	500	500	650	700
Fan	Type			-	Propeller Fan	Propeller Fan	Propeller Fan	Propeller Fan
	Discharge direction			-	Front (Horizontal)	Front (Horizontal)	Front (Horizontal)	Front (Horizontal)
	Quantity			EA	1	1	1	1
	Air Flow Rate			m^3/min	34.5	34.5	55.4	55.4
				l/s	574	574	923	923
	External Static Pressure		Max.	mmAq	-	-	-	-
				Pa	-	-	-	-
Fan Motor	Type			-	BLDC	BLDC	BLDC	BLDC
	Output x n			W	40 x 1	40 x 1	125 x 1	125 x 1

2. Specification

2-1. Outdoor units

Type					FREE JOINT MULTI	FREE JOINT MULTI	FREE JOINT MULTI	FREE JOINT MULTI
Model Name					AJ040TXJ2KH/EA	AJ050TXJ2KH/EA	AJ068TXJ3KH/EA	AJ080TXJ4KH/EA
Power Supply				Φ, #, V, Hz	1,2,220~240,50/60	1,2,220~240,50/60	1,2,220~240,50/60	1,2,220~240,50/60
Mode				-	HEAT PUMP	HEAT PUMP	HEAT PUMP	HEAT PUMP
Piping Connections	Liquid Pipe			Type	Flare connection	Flare connection	Flare connection	Flare connection
				Φ, mm x EA	6.35 x 2	6.35 x 2	6.35 x 3	6.35 x 3
				Φ, inch x EA	1/4 x 2	1/4 x 2	1/4 x 3	1/4 x 3
	Gas Pipe			Type	Flare connection	Flare connection	Flare connection	Flare connection
				Φ, mm x EA	9.52 x 2	9.52 x 2	9.52 + 12.70 x 2	9.52 x 2 + 12.70 x 2
				Φ, inch x EA	3/8 + 1/2	3/8 + 1/2	3/8 + 1/2 x 2	3/8 x 2 + 1/2 x 2
	Heat insulation				Both Liquid & Gas pipes	Both Liquid & Gas pipes	Both Liquid & Gas pipes	Both Liquid & Gas pipes
	Installation Limitation	Length	Total Piping Length	m	30	30	50	70
			Max. Length (OD~ID)	m	25	25	25	25
		Height	Max. Height (OD~ID)	m	15	15	15	15
			Max. Height (ID~ID)	m	7.5	7.5	7.5	7.5
Wiring Connections	Communication	Min.		mm²	0.75	0.75	0.75	0.75
		Remark		-	F1, F2	F1, F2	F1, F2	F1, F2
Refrigerant	Type			-	R410A	R410A	R410A	R410A
	Factory Charging			kg	1.6	1.6	2.2	2.8
				tCO_2e	3.34	3.34	4.59	5.85
Sound	Sound Pressure	Cooling		dB(A)	45	46	48	48
		Heating			47	48	50	50
	Sound Power				60	61	64	64
External Dimension	Net Weight			kg	35.5	36.0	53.5	57.5
	Shipping Weight			kg	38.0	38.5	57.5	62.0
	Net Dimensions (WxHxD)			mm	790 x 548 x 285	790 x 548 x 285	880 x 798 x 310	880 x 798 x 310
	Shipping Dimensions (WxHxD)			mm	913 x 622 x 371	913 x 622 x 371	1,023 x 896 x 413	1,023 x 896 x 413
Operating Temp. Range	Cooling			°C	-10.0 ~ 46.0	-10.0 ~ 46.0	-10.0 ~ 46.0	-10.0 ~ 46.0
	Heating			°C	-15.0 ~ 24.0	-15.0 ~ 24.0	-15.0 ~ 24.0	-15.0 ~ 24.0

NOTE

- Specifications may be subject to change without prior notice.
- 1)* Capacities are based on (Equivalent refrigerant piping : 5m, Level differences : 0m)
  - Cooling : Indoor temperature : 27°C DB, 19°C WB / Outdoor temperature : 35°C DB, 24°C WB
  - Heating : Indoor temperature : 20°C DB, 15°C WB / Outdoor temperature : 7°C DB, 6°C WB
- 2)* Select wire size based on the value of MCA
- 3)* Sound pressure level is obtained in an anechoic room.
  - Sound pressure level is a relative value, depending on the distance and acoustic environment.
  - Sound pressure level may differ depending on operation condition.
  - dBA = A-weighted sound pressure level
  - Reference acoustic pressure 0 dB = 20uPa
- 4)* Sound power level is an absolute value that a sound source generates.
  - dBA = A-weighted sound power level
  - Reference power : 1pW
  - Measured according to ISO 3741
- 5)* These products contain R410A (GWP=2,088) which is fluorinated greenhouse gas.

2. Specification

2-1. Outdoor units

Type					FREE JOINT MULTI	FREE JOINT MULTI	FREE JOINT MULTI
Model Name					AJ100TXJ5KH/EA	AJ125TXJ5KH/EA	AJ140TXJ5KH/EA
Power Supply				Φ, #, V, Hz	1,2,220~240,50/60	1,2,220~240,50/60	1,2,220~240,50/60
Mode				-	HEAT PUMP	HEAT PUMP	HEAT PUMP
Performance	Capacity	Cooling		kW	10.0	12.5	14.0
				Btu/h	34,100	42,600	47.700
		Heating		kW	12.0	13.5	15.0
				Btu/h	40,900	46,000	51,100
Maximum number of connectable Indoor Units				EA	5	5	5
Power	Power Input (Nominal)	Cooling		kW	2.90	3.95	4.84
		Heating			2.93	3.46	4.28
	Current Input (Nominal)	Cooling		A	13.3	18.1	22.1
		Heating			13.4	15.8	19.6
	Current	MCA		A	25.0	34.0	34.0
		MFA		A	28.8	40.0	40.0
Efficiency	EER	Cooling		W/W	3.45	3.16	2.89
	COP	Heating		W/W	4.10	3.90	3.50
	SEER (Grade)			W/W	6.60(A++)	-	6.60(A++)
	SCOP (Grade)			W/W	4.10(A+)	-	4.33(A+)
Casing	Material	Body		-	GI steel plate	GI steel plate	GI steel plate
		Base		-	GI steel plate	GI steel plate	GI steel plate
Heat Exchanger	Type			-	Fin & Tube	Fin & Tube	Fin & Tube
	Material	Fin		-	Al	Al	Al
		Tube		-	Cu	Cu	Cu
	Fin Treatment			-	Anti-Corrosion	Anti-Corrosion	Anti-Corrosion
Compressor	Type			-	Twin BLDC Rotary	Twin BLDC Rotary	Twin BLDC Rotary
	Output			kW x n	9.17 x 1	10.01 x 1	10.01 x 1
	Model Name			-	UG8T300FUBJU	KTF310D43UMT	KTF310D43UMT
	Oil	Type		-	PVE	ESTER OIL VG74	ESTER OIL VG74
		Initial Charge		cc	1200	1000	1000
Fan	Type			-	Propeller Fan	Propeller Fan	Propeller Fan
	Discharge direction			-	Front (Horizontal)	Front (Horizontal)	Front (Horizontal)
	Quantity			EA	1	2	2
	Air Flow Rate			m^3/min	72.7	94.0	94.0
				l/s	1,212	1,567	1,567
	External Static Pressure		Max.	mmAq	-	-	-
				Pa	-	-	-
Fan Motor	Type			-	BLDC	BLDC	BLDC
	Output x n			W	125 x 1	125 x 1	125 x 1

2. Specification

2-1. Outdoor units

Type					FREE JOINT MULTI	FREE JOINT MULTI	FREE JOINT MULTI
Model Name					AJ100TXJ5KH/EA	AJ125TXJ5KH/EA	AJ140TXJ5KH/EA
Power Supply				Φ, #, V, Hz	1,2,220~240,50/60	1,2,220~240,50/60	1,2,220~240,50/60
Mode				-	HEAT PUMP	HEAT PUMP	HEAT PUMP
Piping Connections	Liquid Pipe			Type	Flare connection	Flare connection	Flare connection
				Φ, mm x EA	6.35 x 4	6.35 x 5	6.35 x 5
				Φ, inch x EA	1/4 x 4	1/4 x 5	1/4 x 5
	Gas Pipe			Type	Flare connection	Flare connection	Flare connection
				Φ, mm x EA	9.52 x 2 + 12.70 x 3	9.52 x 2 + 12.70 x 3	9.52 x 2 + 12.70 x 3
				Φ, inch x EA	3/8 x 2 + 1/2 x 3	3/8 x 2 + 1/2 x 3	3/8 x 2 + 1/2 x 3
	Heat insulation				Both Liquid & Gas pipes	Both Liquid & Gas pipes	Both Liquid & Gas pipes
	Installation Limitation	Length	Total Piping Length	m	70	70	70
			Max. Length (OD~ID)	m	25	25	25
		Height	Max. Height (OD~ID)	m	15	15	15
			Max. Height (ID~ID)	m	7.5	7.5	7.5
Wiring Connections	Communication	Min.		mm²	0.75	0.75	0.75
		Remark		-	F1, F2	F1, F2	F1, F2
Refrigerant	Type			-	R410A	R410A	R410A
	Factory Charging			kg	3.3	3.8	3.8
				tCO_2e	6.89	7.93	7.93
Sound	Sound Pressure	Cooling		dB(A)	54	52	52
		Heating			55	54	54
	Sound Power				70	70	70
External Dimension	Net Weight			kg	76.5	87.5	87.5
	Shipping Weight			kg	82.0	99.0	99.0
	Net Dimensions (WxHxD)			mm	940 x 998 x 330	940 x 1,210 x 330	940 x 1,210 x 330
	Shipping Dimensions (WxHxD)			mm	995 x 1,096 x 426	1,093 x 1,388 x 426	1,093 x 1,388 x 426
Operating Temp. Range	Cooling			°C	-10.0 ~ 46.0	-10.0 ~ 46.0	-10.0 ~ 46.0
	Heating			°C	-15.0 ~ 24.0	-15.0 ~ 24.0	-15.0 ~ 24.0

NOTE

- Specifications may be subject to change without prior notice.
- 1)* Capacities are based on (Equivalent refrigerant piping : 5m, Level differences : 0m)
  - Cooling : Indoor temperature : 27°C DB, 19°C WB / Outdoor temperature : 35°C DB, 24°C WB
  - Heating : Indoor temperature : 20°C DB, 15°C WB / Outdoor temperature : 7°C DB, 6°C WB
- 2)* Select wire size based on the value of MCA
- 3)* Sound pressure level is obtained in an anechoic room.
  - Sound pressure level is a relative value, depending on the distance and acoustic environment.
  - Sound pressure level may differ depending on operation condition.
  - dBA = A-weighted sound pressure level
  - Reference acoustic pressure 0 dB = 20uPa
- 4)* Sound power level is an absolute value that a sound source generates.
  - dBA = A-weighted sound power level
  - Reference power : 1pW
  - Measured according to ISO 3741
- 5)* These products contain R410A (GWP=2,088) which is fluorinated greenhouse gas.

2. Specification

2-2. Indoor units

AR9500

Type				AR9500	AR9500	AR9500
Model Name				AJ020TNAPKH/EA	AJ025TNAPKH/EA	AJ035TNAPKH/EA
Power Supply			Ø, #, V, Hz	1,2,220-240,50/60	1,2,220-240,50/60	1,2,220-240,50/60
Mode			-	HP	HP	HP
Performance	Capacity	Cooling	kW	2.0	2.5	3.5
			Btu/h	6,800	8,500	11,900
		Heating	kW	2.2	3.2	4.0
			Btu/h	7,500	10,900	13,600
Power	Power Input	Cooling	W	40	40	40
		Heating	W	40	40	40
	Current Input	Cooling	A	0.4	0.4	0.4
		Heating	A	0.4	0.4	0.4
Heat Exchanger	Type		-	Fin & Tube	Fin & Tube	Fin & Tube
	Material	Fin	-	Al	Al	Al
		Tube	-	Cu	Cu	Cu
	Fin Treatment		-	Green Hydrophile	Green Hydrophile	Green Hydrophile
Fan	Type		-	Cross Flow	Cross Flow	Cross Flow
	Quantity		EA	1	1	1
	Air Flow Rate	Cooling (T/H/M/L)	m^3/min	9.9 / 9.2 / 8.4 / 7.3	10.3 / 9.6 / 8.4 / 7.3	10.7 / 9.6 / 8.5 / 7.1
			l/s	165 / 153 / 140 / 122	172 / 160 / 140 / 122	178 / 160 / 142 / 118
		Heating (T/H/M/L)	m^3/min	10.8 / 10.0 / 9.3 / 8.2	11.2 / 10.4 / 9.3 / 8.2	11.7 / 10.6 / 9.5 / 8.0
			l/s	180 / 167 / 155 / 137	187 / 173 / 155 / 137	195 / 177 / 158 / 133
Fan Motor	Type		-	BLDC	BLDC	BLDC
	Output		W x n	27 x 1	27 x 1	27 x 1
Piping Connections	Liquid Pipe		Type	Flare connection	Flare connection	Flare connection
			Φ, mm (inch)	6.35 (1/4)	6.35 (1/4)	6.35 (1/4)
	Gas Pipe		Type	Flare connection	Flare connection	Flare connection
			Φ, mm (inch)	9.52 (3/8)	9.52 (3/8)	9.52 (3/8)
	Heat Insulation		-	Both liquid and gas pipes	Both liquid and gas pipes	Both liquid and gas pipes
	Drain Pipe		Φ, mm	16.3, 550	16.3, 550	16.3, 550
Wiring connections	Communication	Min.	mm^2	0.75	0.75	0.75
		Remark	-	F1, F2	F1, F2	F1, F2

2. Specification

2-2. Indoor units

Type				AR9500	AR9500	AR9500
Model Name				AJ020TNAPKH/EA	AJ025TNAPKH/EA	AJ035TNAPKH/EA
Refrigerant	Type		-	R410A	R410A	R410A
	Electronic Expansion Valve		-	EEV NOT INCLUDED	EEV NOT INCLUDED	EEV NOT INCLUDED
Sound	Sound Pressure Level	H / Silent	dB(A)	38 / 23	38 / 23	39 / 23
	Sound Power Level		dB(A)	54	54	56
External Dimension	Net Weight		kg	10.6	10.6	10.6
	Shipping Weight		kg	12.0	12.0	12.0
	Net Dimensions (WxHxD)		mm	889 x 299 x 215	889 x 299 x 215	889 x 299 x 215
	Shipping Dimensions (WxHxD)		mm	950 x 290 x 375	950 x 290 x 375	950 x 290 x 375
Casing	Material		-	HIPS	HIPS	HIPS

NOTE

- Specifications may be subject to change without prior notice.
- 1)* Capacities are based on (Equivalent refrigerant piping : 5m, Level differences : 0m)
  - Cooling : Indoor temperature : 27°C DB, 19°C WB / Outdoor temperature : 35°C DB, 24°C WB
  - Heating : Indoor temperature : 20°C DB, 15°C WB / Outdoor temperature : 7°C DB, 6°C WB
- 2)* Select wire size based on the value of MCA
- 3)* Sound pressure level is obtained in an anechoic room.
  - Sound pressure level is a relative value, depending on the distance and acoustic environment.
  - Sound pressure level may differ depending on operation condition.
  - dBA = A-weighted sound pressure level
  - Reference acoustic pressure 0 dB = 20uPa
- 4)* Sound power level is an absolute value that a sound source generates.
  - dBA = A-weighted sound power level
  - Reference power : 1pW
  - Measured according to ISO 3741
- 5)* These products contain R410A (GWP=2,088) which is fluorinated greenhouse gas.

2. Specification

2-2. Indoor units

AR9500

Type				AR9500	AR9500
Model Name				AJ050TNAPKH/EA	AJ068TNAPKH/EA
Power Supply			Ø, #, V, Hz	1,2,220-240,50/60	1,2,220-240,50/60
Mode			-	HP	HP
Performance	Capacity	Cooling	kW	5.0	6.2
			Btu/h	17,100	21,200
		Heating	kW	6.0	8.0
			Btu/h	20,500	27,300
Power	Power Input	Cooling	W	50	50
		Heating	W	50	50
	Current Input	Cooling	A	0.5	0.5
		Heating	A	0.5	0.5
Heat Exchanger	Type		-	Fin & Tube	Fin & Tube
	Material	Fin	-	Al	Al
		Tube	-	Cu	Cu
	Fin Treatment		-	Green Hydrophile	Green Hydrophile
Fan	Type		-	Cross Flow	Cross Flow
	Quantity		EA	1	1
	Air Flow Rate	Cooling (T/H/M/L)	m^3/min	16.2 / 15.2 / 13.6 / 12.1	20.1 / 18.0 / 15.9 / 13.7
			l/s	270 / 253 / 227 / 202	335 / 300 / 265 / 228
		Heating (T/H/M/L)	m^3/min	16.8 / 15.7 / 14.2 / 12.7	20.4 / 18.2 / 16.0 / 13.9
			l/s	280 / 262 / 237 / 212	340 / 303 / 267 / 232
Fan Motor	Type		-	BLDC	BLDC
	Output		W x n	27 x 1	27 x 1
Piping Connections	Liquid Pipe		Type	Flare connection	Flare connection
			Φ, mm (inch)	6.35 (1/4)	6.35 (1/4)
	Gas Pipe		Type	Flare connection	Flare connection
			Φ, mm (inch)	12.7 (1/2)	15.88 (5/8)
	Heat Insulation		-	Both liquid and gas pipes	Both liquid and gas pipes
	Drain Pipe		Φ, mm	16.3, 550	16.3, 550
Wiring connections	Communication	Min.	mm^2	0.75	0.75
		Remark	-	F1, F2	F1, F2

2. Specification

2-2. Indoor units

Type				AR9500	AR9500
Model Name				AJ050TNAPKH/EA	AJ068TNAPKH/EA
Refrigerant	Type		-	R410A	R410A
	Electronic Expansion Valve		-	EEV NOT INCLUDED	EEV NOT INCLUDED
Sound	Sound Pressure Level	H / Silent	dB(A)	42 / 30	47 / 30
	Sound Power Level		dB(A)	58	64
External Dimension	Net Weight		kg	12.5	12.5
	Shipping Weight		kg	14.3	14.3
	Net Dimensions (WxHxD)		mm	1,055 x 299 x 215	1,055 x 299 x 215
	Shipping Dimensions (WxHxD)		mm	1,115 x 290 x 375	1,115 x 290 x 375
Casing	Material		-	HIPS	HIPS

NOTE

- Specifications may be subject to change without prior notice.
- 1)* Capacities are based on (Equivalent refrigerant piping : 5m, Level differences : 0m)
  - Cooling : Indoor temperature : 27°C DB, 19°C WB / Outdoor temperature : 35°C DB, 24°C WB
  - Heating : Indoor temperature : 20°C DB, 15°C WB / Outdoor temperature : 7°C DB, 6°C WB
- 2)* Select wire size based on the value of MCA
- 3)* Sound pressure level is obtained in an anechoic room.
  - Sound pressure level is a relative value, depending on the distance and acoustic environment.
  - Sound pressure level may differ depending on operation condition.
  - dBA = A-weighted sound pressure level
  - Reference acoustic pressure 0 dB = 20uPa
- 4)* Sound power level is an absolute value that a sound source generates.
  - dBA = A-weighted sound power level
  - Reference power : 1pW
  - Measured according to ISO 3741
- 5)* These products contain R410A (GWP=2,088) which is fluorinated greenhouse gas.

2. Specification

2-2. Indoor units

AR9500

Type				AR9500	AR9500	AR9500
Model Name				AJ020TNAPKH/TK	AJ025TNAPKH/TK	AJ035TNAPKH/TK
Power Supply			Ø, #, V, Hz	1,2,220-240,50/60	1,2,220-240,50/60	1,2,220-240,50/60
Mode			-	HP	HP	HP
Performance	Capacity	Cooling	kW	2.0	2.5	3.5
			Btu/h	6,800	8,500	11,900
		Heating	kW	2.2	3.2	4.0
			Btu/h	7,500	10,900	13,600
Power	Power Input	Cooling	W	40	40	40
		Heating	W	40	40	40
	Current Input	Cooling	A	0.4	0.4	0.4
		Heating	A	0.4	0.4	0.4
Heat Exchanger	Type		-	Fin & Tube	Fin & Tube	Fin & Tube
	Material	Fin	-	Al	Al	Al
		Tube	-	Cu	Cu	Cu
	Fin Treatment		-	Green Hydrophile	Green Hydrophile	Green Hydrophile
Fan	Type		-	Cross Flow	Cross Flow	Cross Flow
	Quantity		EA	1	1	1
	Air Flow Rate	Cooling (T/H/M/L)	m^3/min	9.9 / 9.2 / 8.4 / 7.3	10.3 / 9.6 / 8.4 / 7.3	10.7 / 9.6 / 8.5 / 7.1
			l/s	165 / 153 / 140 / 122	172 / 160 / 140 / 122	178 / 160 / 142 / 118
		Heating (T/H/M/L)	m^3/min	10.8 / 10.0 / 9.3 / 8.2	11.2 / 10.4 / 9.3 / 8.2	11.7 / 10.6 / 9.5 / 8.0
			l/s	180 / 167 / 155 / 137	187 / 173 / 155 / 137	195 / 177 / 158 / 133
Fan Motor	Type		-	BLDC	BLDC	BLDC
	Output		W x n	27 x 1	27 x 1	27 x 1
Piping Connections	Liquid Pipe		Type	Flare connection	Flare connection	Flare connection
			Φ, mm (inch)	6.35 (1/4)	6.35 (1/4)	6.35 (1/4)
	Gas Pipe		Type	Flare connection	Flare connection	Flare connection
			Φ, mm (inch)	9.52 (3/8)	9.52 (3/8)	9.52 (3/8)
	Heat Insulation		-	Both liquid and gas pipes	Both liquid and gas pipes	Both liquid and gas pipes
	Drain Pipe		Φ, mm	16.3, 550	16.3, 550	16.3, 550

2. Specification

2-2. Indoor units

Type				AR9500	AR9500	AR9500
Model Name				AJ020TNAPKH/TK	AJ025TNAPKH/TK	AJ035TNAPKH/TK
Wiring connections	Communication	Min.	mm²	0.75	0.75	0.75
		Remark	-	F1, F2	F1, F2	F1, F2
Refrigerant	Type		-	R410A	R410A	R410A
	Electronic Expansion Valve		-	EEV NOT INCLUDED	EEV NOT INCLUDED	EEV NOT INCLUDED
Sound	Sound Pressure Level	H / Silent	dB(A)	38 / 23	38 / 23	39 / 23
	Sound Power Level		dB(A)	54	54	56
External Dimension	Net Weight		kg	10.6	10.6	10.6
	Shipping Weight		kg	12.0	12.0	12.0
	Net Dimensions (WxHxD)		mm	889 x 299 x 215	889 x 299 x 215	889 x 299 x 215
	Shipping Dimensions (WxHxD)		mm	950 x 290 x 375	950 x 290 x 375	950 x 290 x 375
Casing	Material		-	HIPS	HIPS	HIPS

NOTE

- Specifications may be subject to change without prior notice.
- 1)* Capacities are based on (Equivalent refrigerant piping : 5m, Level differences : 0m)
  - Cooling : Indoor temperature : 27°C DB, 19°C WB / Outdoor temperature : 35°C DB, 24°C WB
  - Heating : Indoor temperature : 20°C DB, 15°C WB / Outdoor temperature : 7°C DB, 6°C WB
- 2)* Select wire size based on the value of MCA
- 3)* Sound pressure level is obtained in an anechoic room.
  - Sound pressure level is a relative value, depending on the distance and acoustic environment.
  - Sound pressure level may differ depending on operation condition.
  - dBA = A-weighted sound pressure level
  - Reference acoustic pressure 0 dB = 20uPa
- 4)* Sound power level is an absolute value that a sound source generates.
  - dBA = A-weighted sound power level
  - Reference power : 1pW
  - Measured according to ISO 3741
- 5)* These products contain R410A (GWP=2,088) which is fluorinated greenhouse gas.

2. Specification

2-2. Indoor units

AR9500

Type				AR9500	AR9500
Model Name				AJ050TNAPKH/TK	AJ068TNAPKH/TK
Power Supply			Ø, #, V, Hz	1,2,220-240,50/60	1,2,220-240,50/60
Mode			-	HP	HP
Performance	Capacity	Cooling	kW	5.0	6.2
			Btu/h	17,100	21,200
		Heating	kW	6.0	8.0
			Btu/h	20,500	27,300
Power	Power Input	Cooling	W	50	50
		Heating	W	50	50
	Current Input	Cooling	A	0.5	0.5
		Heating	A	0.5	0.5
Heat Exchanger	Type		-	Fin & Tube	Fin & Tube
	Material	Fin	-	Al	Al
		Tube	-	Cu	Cu
	Fin Treatment		-	Green Hydrophile	Green Hydrophile
Fan	Type		-	Cross Flow	Cross Flow
	Quantity		EA	1	1
	Air Flow Rate	Cooling (T/H/M/L)	m^3/min	16.2 / 15.2 / 13.6 / 12.1	20.1 / 18.0 / 15.9 / 13.7
			l/s	270 / 253 / 227 / 202	335 / 300 / 265 / 228
		Heating (T/H/M/L)	m^3/min	16.8 / 15.7 / 14.2 / 12.7	20.4 / 18.2 / 16.0 / 13.9
			l/s	280 / 262 / 237 / 212	340 / 303 / 267 / 232
Fan Motor	Type		-	BLDC	BLDC
	Output		W x n	27 x 1	27 x 1
Piping Connections	Liquid Pipe		Type	Flare connection	Flare connection
			Φ, mm (inch)	6.35 (1/4)	6.35 (1/4)
	Gas Pipe		Type	Flare connection	Flare connection
			Φ, mm (inch)	12.7 (1/2)	15.88 (5/8)
	Heat Insulation		-	Both liquid and gas pipes	Both liquid and gas pipes
	Drain Pipe		Φ, mm	16.3, 550	16.3, 550

2. Specification

2-2. Indoor units

Type				AR9500	AR9500
Model Name				AJ050TNAPKH/TK	AJ068TNAPKH/TK
Wiring connections	Communication	Min.	mm²	0.75	0.75
		Remark	-	F1, F2	F1, F2
Refrigerant	Type		-	R410A	R410A
	Electronic Expansion Valve		-	EEV NOT INCLUDED	EEV NOT INCLUDED
Sound	Sound Pressure Level	H / Silent	dB(A)	42 / 30	47 / 30
	Sound Power Level		dB(A)	58	64
External Dimension	Net Weight		kg	12.5	12.5
	Shipping Weight		kg	14.3	14.3
	Net Dimensions (WxHxD)		mm	1,055 x 299 x 215	1,055 x 299 x 215
	Shipping Dimensions (WxHxD)		mm	1,115 x 290 x 375	1,115 x 290 x 375
Casing	Material		-	HIPS	HIPS

NOTE

- Specifications may be subject to change without prior notice.
- 1)* Capacities are based on (Equivalent refrigerant piping : 5m, Level differences : 0m)
  - Cooling : Indoor temperature : 27°C DB, 19°C WB / Outdoor temperature : 35°C DB, 24°C WB
  - Heating : Indoor temperature : 20°C DB, 15°C WB / Outdoor temperature : 7°C DB, 6°C WB
- 2)* Select wire size based on the value of MCA
- 3)* Sound pressure level is obtained in an anechoic room.
  - Sound pressure level is a relative value, depending on the distance and acoustic environment.
  - Sound pressure level may differ depending on operation condition.
  - dBA = A-weighted sound pressure level
  - Reference acoustic pressure 0 dB = 20uPa
- 4)* Sound power level is an absolute value that a sound source generates.
  - dBA = A-weighted sound power level
  - Reference power : 1pW
  - Measured according to ISO 3741
- 5)* These products contain R410A (GWP=2,088) which is fluorinated greenhouse gas.

2. Specification

2-2. Indoor units

AR5500

Type				AR5500	AR5500	AR5500
Model Name				AJ020TNTDKH/EA	AJ025TNTDKH/EA	AJ035TNTDKH/EA
Power Supply			Ø, #, V, Hz	1,2,220-240,50/60	1,2,220-240,50/60	1,2,220-240,50/60
Mode			-	HP	HP	HP
Performance	Capacity	Cooling	kW	2.0	2.5	3.5
			Btu/h	6,800	8,500	11,900
		Heating	kW	2.2	3.2	4.0
			Btu/h	7,500	10,900	13,600
Power	Power Input	Cooling	W	30	30	30
		Heating	W	30	30	30
	Current Input	Cooling	A	0.3	0.3	0.3
		Heating	A	0.3	0.3	0.3
Heat Exchanger	Type		-	Fin & Tube	Fin & Tube	Fin & Tube
	Material	Fin	-	Al	Al	Al
		Tube	-	Cu	Cu	Cu
	Fin Treatment		-	Green Hydrophile	Green Hydrophile	Green Hydrophile
Fan	Type		-	Cross Flow	Cross Flow	Cross Flow
	Quantity		EA	1	1	1
	Air Flow Rate	Cooling (T/H/M/L)	m^3/min	9.9 / 9.4 / 9.3 / 8.4	10.3 / 9.8 / 9.3 / 8.4	10.7 / 10.3 / 9.3 / 8.4
			l/s	177 / 168 / 158 / 142	185 / 177 / 158 / 142	195 / 177 / 158 / 142
		Heating (T/H/M/L)	m^3/min	11.7 / 11.1 / 10.6 / 9.5	12.2 / 11.7 / 10.6 / 9.5	12.7 / 11.7 / 10.6 / 9.5
			l/s	195 / 185 / 177 / 158	203 / 195 / 177 / 158	212 / 195 / 177 / 158
Fan Motor	Type		-	BLDC	BLDC	BLDC
	Output		W x n	27 x 1	27 x 1	27 x 1
Piping Connections	Liquid Pipe		Type	Flare connection	Flare connection	Flare connection
			Φ, mm (inch)	6.35 (1/4)	6.35 (1/4)	6.35 (1/4)
	Gas Pipe		Type	Flare connection	Flare connection	Flare connection
			Φ, mm (inch)	9.52 (3/8)	9.52 (3/8)	9.52 (3/8)
	Heat Insulation		-	Both liquid and gas pipes	Both liquid and gas pipes	Both liquid and gas pipes
	Drain Pipe		Φ, mm	16.3, 550	16.3, 550	16.3, 550

2. Specification

2-2. Indoor units

Type				AR5500	AR5500	AR5500
Model Name				AJ020TNTDKH/EA	AJ025TNTDKH/EA	AJ035TNTDKH/EA
Wiring connections	Communication	Min.	mm²	0.75	0.75	0.75
		Remark	-	F1, F2	F1, F2	F1, F2
Refrigerant	Type		-	R410A	R410A	R410A
	Electronic Expansion Valve		-	EEV NOT INCLUDED	EEV NOT INCLUDED	EEV NOT INCLUDED
Sound	Sound Pressure Level	H / Silent	dB(A)	37 / 23	37 / 23	38 / 23
	Sound Power Level		dB(A)	54	54	56
External Dimension	Net Weight		kg	9.1	9.1	9.1
	Shipping Weight		kg	10.4	10.4	10.4
	Net Dimensions (WxHxD)		mm	820 x 299 x 215	820 x 299 x 215	820 x 299 x 215
	Shipping Dimensions (WxHxD)		mm	880 x 290 x 375	880 x 290 x 375	880 x 290 x 375
Casing	Material		-	HIPS	HIPS	HIPS

NOTE

- Specifications may be subject to change without prior notice.
- 1)* Capacities are based on (Equivalent refrigerant piping : 5m, Level differences : 0m)
  - Cooling : Indoor temperature : 27°C DB, 19°C WB / Outdoor temperature : 35°C DB, 24°C WB
  - Heating : Indoor temperature : 20°C DB, 15°C WB / Outdoor temperature : 7°C DB, 6°C WB
- 2)* Select wire size based on the value of MCA
- 3)* Sound pressure level is obtained in an anechoic room.
  - Sound pressure level is a relative value, depending on the distance and acoustic environment.
  - Sound pressure level may differ depending on operation condition.
  - dBA = A-weighted sound pressure level
  - Reference acoustic pressure 0 dB = 20uPa
- 4)* Sound power level is an absolute value that a sound source generates.
  - dBA = A-weighted sound power level
  - Reference power : 1pW
  - Measured according to ISO 3741
- 5)* These products contain R410A (GWP=2,088) which is fluorinated greenhouse gas.

2. Specification

2-2. Indoor units

AR5500

Type				AR5500	AR5500	AR5500
Model Name				AJ050TNTDKH/EA	AJ068TNTDKH/EA	AJ025TNTDKH/AR
Power Supply			Ø, #, V, Hz	1,2,220-240,50/60	1,2,220-240,50/60	1,2,220-240,50/60
Mode			-	HP	HP	HP
Performance	Capacity	Cooling	kW	5.0	6.5	2.5
			Btu/h	17,100	22,200	8,500
		Heating	kW	6.0	7.0	3.2
			Btu/h	20,500	23,900	10,900
Power	Power Input	Cooling	W	50	50	30
		Heating	W	50	50	30
	Current Input	Cooling	A	0.5	0.5	0.3
		Heating	A	0.5	0.5	0.3
Heat Exchanger	Type		-	Fin & Tube	Fin & Tube	Fin & Tube
	Material	Fin	-	Al	Al	Al
		Tube	-	Cu	Cu	Cu
	Fin Treatment		-	Green Hydrophile	Green Hydrophile	Green Hydrophile
Fan	Type		-	Cross Flow	Cross Flow	Cross Flow
	Quantity		EA	1	1	1
	Air Flow Rate	Cooling (T/H/M/L)	m^3/min	15.3 / 14.8 / 13.7 / 12.7	16.4 / 15.3 / 14.2 / 13.1	10.3 / 9.8 / 9.3 / 8.4
			l/s	265 / 253 / 232 / 207	298 / 277 / 242 / 207	185 / 177 / 158 / 142
		Heating (T/H/M/L)	m^3/min	17.2 / 16.6 / 15.2 / 13.9	19.3 / 17.9 / 15.9 / 13.9	12.2 / 11.7 / 10.6 / 9.5
			l/s	287 / 277 / 253 / 232	322 / 298 / 265 / 232	203 / 195 / 177 / 158
Fan Motor	Type		-	BLDC	BLDC	BLDC
	Output		W x n	27 x 1	27 x 1	27 x 1
Piping Connections	Liquid Pipe		Type	Flare connection	Flare connection	Flare connection
			Φ, mm (inch)	6.35 (1/4)	6.35 (1/4)	6.35 (1/4)
	Gas Pipe		Type	Flare connection	Flare connection	Flare connection
			Φ, mm (inch)	12.7 (1/2)	15.88 (5/8)	9.52 (3/8)
	Heat Insulation		-	Both liquid and gas pipes	Both liquid and gas pipes	Both liquid and gas pipes
	Drain Pipe		Φ, mm	16.3, 550	16.3, 550	16.3, 550

2. Specification

2-2. Indoor units

Type				AR5500	AR5500	AR5500
Model Name				AJ050TNTDKH/EA	AJ068TNTDKH/EA	AJ025TNTDKH/AR
Wiring connections	Communication	Min.	mm²	0.75	0.75	0.75
		Remark	-	F1, F2	F1, F2	F1, F2
Refrigerant	Type		-	R410A	R410A	R410A
	Electronic Expansion Valve		-	EEV NOT INCLUDED	EEV NOT INCLUDED	EEV NOT INCLUDED
Sound	Sound Pressure Level	H / Silent	dB(A)	41 / 30	45 / 30	37 / 23
	Sound Power Level		dB(A)	58	62	54
External Dimension	Net Weight		kg	11.5	11.5	9.1
	Shipping Weight		kg	13.1	13.1	10.4
	Net Dimensions (WxHxD)		mm	1,055 x 299 x 215	1,055 x 299 x 215	820 x 299 x 215
	Shipping Dimensions (WxHxD)		mm	1,115 x 290 x 375	1,115 x 290 x 375	880 x 290 x 375
Casing	Material		-	HIPS	HIPS	HIPS

NOTE

- Specifications may be subject to change without prior notice.
- 1)* Capacities are based on (Equivalent refrigerant piping : 5m, Level differences : 0m)
  - Cooling : Indoor temperature : 27°C DB, 19°C WB / Outdoor temperature : 35°C DB, 24°C WB
  - Heating : Indoor temperature : 20°C DB, 15°C WB / Outdoor temperature : 7°C DB, 6°C WB
- 2)* Select wire size based on the value of MCA
- 3)* Sound pressure level is obtained in an anechoic room.
  - Sound pressure level is a relative value, depending on the distance and acoustic environment.
  - Sound pressure level may differ depending on operation condition.
  - dBA = A-weighted sound pressure level
  - Reference acoustic pressure 0 dB = 20uPa
- 4)* Sound power level is an absolute value that a sound source generates.
  - dBA = A-weighted sound power level
  - Reference power : 1pW
  - Measured according to ISO 3741
- 5)* These products contain R410A (GWP=2,088) which is fluorinated greenhouse gas.

2. Specification

2-2. Indoor units

AR5500

Type				AR5500	AR5500	AR5500
Model Name				AJ035TNTDKH/AR	AJ050TNTDKH/AR	AJ068TNTDKH/AR
Power Supply			Ø, #, V, Hz	1,2,220-240,50/60	1,2,220-240,50/60	1,2,220-240,50/60
Mode			-	HP	HP	HP
Performance	Capacity	Cooling	kW	3.5	5.0	6.5
			Btu/h	11,900	17,100	22,200
		Heating	kW	4.0	6.0	7.0
			Btu/h	13,600	20,500	23,900
Power	Power Input	Cooling	W	30	50	50
		Heating	W	30	50	50
	Current Input	Cooling	A	0.3	0.5	0.5
		Heating	A	0.3	0.5	0.5
Heat Exchanger	Type		-	Fin & Tube	Fin & Tube	Fin & Tube
	Material	Fin	-	Al	Al	Al
		Tube	-	Cu	Cu	Cu
	Fin Treatment		-	Green Hydrophile	Green Hydrophile	Green Hydrophile
Fan	Type		-	Cross Flow	Cross Flow	Cross Flow
	Quantity		EA	1	1	1
	Air Flow Rate	Cooling (T/H/M/L)	m^3/min	10.7 / 10.3 / 9.3 / 8.4	15.3 / 14.8 / 13.7 / 12.7	16.4 / 15.3 / 14.2 / 13.1
			l/s	195 / 177 / 158 / 142	265 / 253 / 232 / 207	298 / 277 / 242 / 207
		Heating (T/H/M/L)	m^3/min	12.7 / 11.7 / 10.6 / 9.5	17.2 / 16.6 / 15.2 / 13.9	19.3 / 17.9 / 15.9 / 13.9
			l/s	212 / 195 / 177 / 158	287 / 277 / 253 / 232	322 / 298 / 265 / 232
Fan Motor	Type		-	BLDC	BLDC	BLDC
	Output		W x n	27 x 1	27 x 1	27 x 1
Piping Connections	Liquid Pipe		Type	Flare connection	Flare connection	Flare connection
			Φ, mm (inch)	6.35 (1/4)	6.35 (1/4)	6.35 (1/4)
	Gas Pipe		Type	Flare connection	Flare connection	Flare connection
			Φ, mm (inch)	9.52 (3/8)	12.7 (1/2)	15.88 (5/8)
	Heat Insulation		-	Both liquid and gas pipes	Both liquid and gas pipes	Both liquid and gas pipes
	Drain Pipe		Φ, mm	16.3, 550	16.3, 550	16.3, 550
Wiring connections	Communication	Min.	mm^2	0.75	0.75	0.75
		Remark	-	F1, F2	F1, F2	F1, F2

2. Specification

2-2. Indoor units

Type				AR5500	AR5500	AR5500
Model Name				AJ035TNTDKH/AR	AJ050TNTDKH/AR	AJ068TNTDKH/AR
Refrigerant	Type		-	R410A	R410A	R410A
	Electronic Expansion Valve		-	EEV NOT INCLUDED	EEV NOT INCLUDED	EEV NOT INCLUDED
Sound	Sound Pressure Level	H / Silent	dB(A)	38 / 23	41 / 30	45 / 30
	Sound Power Level		dB(A)	56	58	62
External Dimension	Net Weight		kg	9.1	11.5	11.5
	Shipping Weight		kg	10.4	13.5	13.5
	Net Dimensions (WxHxD)		mm	820 x 299 x 215	1,055 x 299 x 215	1,055 x 299 x 215
	Shipping Dimensions (WxHxD)		mm	880 x 290 x 375	1,115 x 290 x 375	1,115 x 290 x 375
Casing	Material		-	HIPS	HIPS	HIPS

NOTE

- Specifications may be subject to change without prior notice.
- 1)* Capacities are based on (Equivalent refrigerant piping : 5m, Level differences : 0m)
  - Cooling : Indoor temperature : 27°C DB, 19°C WB / Outdoor temperature : 35°C DB, 24°C WB
  - Heating : Indoor temperature : 20°C DB, 15°C WB / Outdoor temperature : 7°C DB, 6°C WB
- 2)* Select wire size based on the value of MCA
- 3)* Sound pressure level is obtained in an anechoic room.
  - Sound pressure level is a relative value, depending on the distance and acoustic environment.
  - Sound pressure level may differ depending on operation condition.
  - dBA = A-weighted sound pressure level
  - Reference acoustic pressure 0 dB = 20uPa
- 4)* Sound power level is an absolute value that a sound source generates.
  - dBA = A-weighted sound power level
  - Reference power : 1pW
  - Measured according to ISO 3741
- 5)* These products contain R410A (GWP=2,088) which is fluorinated greenhouse gas.

2. Specification

2-2. Indoor units

(Wind-Free) 1Way Cassette

Type				(Wind-Free) 1 Way Cassette	(Wind-Free) 1 Way Cassette
Model Name				AJ026TN1DKH/EA	AJ035TN1DKH/EA
Power Supply			Ø, #, V, Hz	1,2,220-240,50/60	1,2,220-240,50/60
Mode			-	HP	HP
Performance	Capacity (Nominal)	Cooling	kW	2.6	3.5
			Btu/h	8,900	11,900
		Heating	kW	2.9	3.8
			Btu/h	9,900	13,000
Power	Power Input (Nominal)	Cooling	W	30	30
		Heating	W	30	30
	Current Input (Nominal)	Cooling	A	0.3	0.3
		Heating	A	0.3	0.3
Heat Exchanger	Type		-	Fin & Tube	Fin & Tube
	Material	Fin	-	Al	Al
		Tube	-	Cu	Cu
	Fin Treatment		-	Green Hydrophile	Green Hydrophile
Fan	Type		-	Crossflow Fan	Crossflow Fan
	Quantity		EA	1	1
	Air Flow Rate		m³/min	7.3 / 6.5 / 5.8	9.0 / 8.2 / 7.2
			l/s	122 / 108 / 97	150 / 137 / 120
	External Static Pressure	Max. (Min/Std/Max)	mmAq	-	-
			Pa	-	-
Fan Motor	Type		-	BLDC	BLDC
	Output		W x n	27 x 1	27 x 1
Piping Connections	Liquid Pipe		Type	Flare connection	Flare connection
			Φ, mm (inch)	6.35 (1/4)	6.35 (1/4)
	Gas Pipe		Type	Flare connection	Flare connection
			Φ, mm (inch)	9.52 (3/8)	9.52 (3/8)
	Heat Insulation		-	Both liquid and gas pipes	Both liquid and gas pipes
	Drain Pipe		Φ, mm	VP20 (OD 25,ID 20)	VP20 (OD 25,ID 20)
Wiring connections	Communication	Min.	mm²	0.75	0.75
		Remark	-	F1, F2	F1, F2
Refrigerant	Type		-	R410A	R410A
	Electronic Expansion Valve		-	EEV NOT INCLUDED	EEV NOT INCLUDED
Sound	Sound Pressure Level	H / Silent	dB(A)	32 / 29 / 26	37 / 35 / 30
	Sound Power Level		dB(A)	50	55
External Dimension	Net Weight		kg	9.5	9.5
	Shipping Weight		kg	12.5	12.5
	Net Dimensions (WxHxD)		mm	970 x 135 x 410	970 x 135 x 410
	Shipping Dimensions (WxHxD)		mm	1,173 x 231 x 487	1,173 x 231 x 487
Casing	Material		-	ABS	ABS

2. Specification

2-2. Indoor units

Type				(Wind-Free) 1 Way Cassette	(Wind-Free) 1 Way Cassette
Model Name				AJ026TN1DKH/EA	AJ035TN1DKH/EA
Panel 1	Model Name		-	PC1NWFMAN	PC1NWFMAN
	Type		-	Wind-Free	Wind-Free
	Material		-	HIPS	HIPS
	Color		-	White	White
	Net Weight		kg	4.3	4.3
	Shipping Weight		kg	6.3	6.3
	Net Dimensions (W×H×D)		mm	1,198 x 35 x 500	1,198 x 35 x 500
	Shipping Dimensions (W×H×D)		mm	1,262 x 122 x 566	1,262 x 122 x 566
Panel 2	Model Name		-	PC1NUSMAN	PC1NUSMAN
	Type		-	Normal	Normal
	Material		-	HIPS	HIPS
	Color		-	White	White
	Net Weight		kg	4.2	4.2
	Shipping Weight		kg	6.1	6.1
	Net Dimensions (W×H×D)		mm	1,180 x 25 x 460	1,180 x 25 x 460
	Shipping Dimensions (W×H×D)		mm	1,250 x 126 x 530	1,250 x 126 x 530
Additional Accessories	Drain pump			Built in	Built in
		Max. lifting Height / Displacement	mm / liter/h	750 / 24	750 / 24
	Air Filter		-	Option (Removable / Washable)	Option (Removable / Washable)

NOTE

- Specifications may be subject to change without prior notice.
- 1)* Capacities are based on (Equivalent refrigerant piping : 5m, Level differences : 0m)
  - Cooling : Indoor temperature : 27°C DB, 19°C WB / Outdoor temperature : 35°C DB, 24°C WB
  - Heating : Indoor temperature : 20°C DB, 15°C WB / Outdoor temperature : 7°C DB, 6°C WB
- 2)* Select wire size based on the value of MCA
- 3)* Sound pressure level is obtained in an anechoic room.
  - Sound pressure level is a relative value, depending on the distance and acoustic environment.
  - Sound pressure level may differ depending on operation condition.
  - dBA = A-weighted sound pressure level
  - Reference acoustic pressure 0 dB = 20uPa
- 4)* Sound power level is an absolute value that a sound source generates.
  - dBA = A-weighted sound power level
  - Reference power : 1pW
  - Measured according to ISO 3741
- 5)* These products contain R410A (GWP=2,088) which is fluorinated greenhouse gas.

2. Specification

2-2. Indoor units

(Wind-Free) 4Way Cassette (600x600)

Type				(Wind-Free) 4Way Cassette (600x600)	(Wind-Free) 4Way Cassette (600x600)	(Wind-Free) 4Way Cassette (600x600)	(Wind-Free) 4Way Cassette (600x600)
Model Name				AJ020TNNDKH/EA	AJ026TNNDKH/EA	AJ035TNNDKH/EA	AJ052TNNDKH/EA
Power Supply			Φ, #, V, Hz	1,2,220-240,50/60	1,2,220-240,50/60	1,2,220-240,50/60	1,2,220-240,50/60
Mode			-	HP	HP	HP	HP
Performance	Capacity	Cooling	kW	2.0	2.6	3.5	5.2
			Btu/h	6,800	8,900	11,900	17,700
		Heating	kW	2.2	2.9	3.8	5.6
			Btu/h	7,500	9,900	13,000	19,100
Power	Power Input	Cooling	W	19	19	22	28
		Heating		19	19	22	28
	Current Input	Cooling	A	0.51	0.51	0.52	0.53
		Heating		0.51	0.51	0.52	0.53
Heat exchanger	Type		-	Fin & Tube	Fin & Tube	Fin & Tube	Fin & Tube
	Material	Fin	-	Al	Al	Al	Al
		Tube	-	Cu	Cu	Cu	Cu
	Fin Treatment		-	Green Hydrophile	Green Hydrophile	Green Hydrophile	Green Hydrophile
Fan	Type		-	Turbo Fan	Turbo Fan	Turbo Fan	Turbo Fan
	Quantity		EA	1	1	1	1
	Air Flow Rate		m^3/min	9.0 / 8.2 / 6.9	9.0 / 8.2 / 6.9	10.5 / 9.0 / 7.4	10.5 / 9.0 / 7.4
			l/s	150 / 137 / 115	150 / 137 / 115	175 / 150 / 123	175 / 150 / 123
	External Static pressure	Max. (Min/Std/Max)	mmAq	-	-	-	-
			Pa	-	-	-	-
Fan Motor	Type		-	BLDC Motor	BLDC Motor	BLDC Motor	BLDC Motor
	Output x n		W	65 x 1	65 x 1	65 x 1	65 x 1
Piping Connections	Liquid Pipe		Type	Flare connection	Flare connection	Flare connection	Flare connection
			Φ, mm (inch)	6.35 (1/4)	6.35 (1/4)	6.35 (1/4)	6.35 (1/4)
	Gas Pipe		Type	Flare connection	Flare connection	Flare connection	Flare connection
			Φ, mm (inch)	9.52 (3/8)	9.52 (3/8)	9.52 (3/8)	12.7 (1/2)
	Heat Insulation		-	Both liquid and gas pipes	Both liquid and gas pipes	Both liquid and gas pipes	Both liquid and gas pipes
	Drain Pipe		Φ,mm	VP25 (OD 32,ID 25)	VP25 (OD 32,ID 25)	VP25 (OD 32,ID 25)	VP25 (OD 32,ID 25)
Wiring connections	Communication	Min.	mm²	0.75	0.75	0.75	0.75
		Remark	-	F1, F2	F1, F2	F1, F2	F1, F2
Refrigerant	Type		-	R410A	R410A	R410A	R410A
	Electronic Expansion Valve		-	EEV NOT INCLUDED	EEV NOT INCLUDED	EEV NOT INCLUDED	EEV NOT INCLUDED
Sound	Sound Pressure	H/M/L	dB(A)	33 / 29 / 24	33 / 29 / 24	35 / 31 / 27	39 / 36 / 32
	Sound Power	Cooling		49	49	53	55
External Dimension	Net Weight		kg	11.5	11.5	11.5	11.8
	Shipping Weight		kg	13.5	13.5	13.5	13.8
	Net Dimensions (W×H×D)		mm	575 x 250 x 575	575 x 250 x 575	575 x 250 x 575	575 x 250 x 575
	Shipping Dimensions (W×H×D)		mm	623 x 298 x 653	623 x 298 x 653	623 x 298 x 653	623 x 298 x 653
Casing	Material		-	Polypropylene	Polypropylene	Polypropylene	Polypropylene

2. Specification

2-2. Indoor units

Type				(Wind-Free) 4Way Cassette (600x600)	(Wind-Free) 4Way Cassette (600x600)	(Wind-Free) 4Way Cassette (600x600)	(Wind-Free) 4Way Cassette (600x600)
Model Name				AJ020TNNDKH/EA	AJ026TNNDKH/EA	AJ035TNNDKH/EA	AJ052TNNDKH/EA
Panel 1	Model Name		-	PC4SUFMAN	PC4SUFMAN	PC4SUFMAN	PC4SUFMAN
	Type		-	Wind-Free	Wind-Free	Wind-Free	Wind-Free
	Material		-	HIPS	HIPS	HIPS	HIPS
	Color		-	DA White	DA White	DA White	DA White
	Net Weight		kg	2.7	2.7	2.7	2.7
	Shipping Weight		kg	3.9	3.9	3.9	3.9
	Net Dimensions (W×H×D)		mm	620 x 57 x 620	620 x 57 x 620	620 x 57 x 620	620 x 57 x 620
	Shipping Dimensions (W×H×D)		mm	670 x 120 x 655	670 x 120 x 655	670 x 120 x 655	670 x 120 x 655
Panel 2	Model Name		-	PC4SUSMBN	PC4SUSMBN	PC4SUSMBN	PC4SUSMBN
	Type		-	Normal (Waffle Type)	Normal (Waffle Type)	Normal (Waffle Type)	Normal (Waffle Type)
	Material		-	HIPS	HIPS	HIPS	HIPS
	Color		-	White	White	White	White
	Net Weight		kg	2.7	2.7	2.7	2.7
	Shipping Weight		kg	3.5	3.5	3.5	3.5
	Net Dimensions (W×H×D)		mm	620 x 45 x 620	620 x 45 x 620	620 x 45 x 620	620 x 45 x 620
	Shipping Dimensions (W×H×D)		mm	667 x 102 x 655	667 x 102 x 655	667 x 102 x 655	667 x 102 x 655
Drain pump	Drain pump		-	Built in	Built in	Built in	Built in
	Max. lifting Height / Displacement		mm / Liter/h	750 / 24	750 / 24	750 / 24	750 / 24
Additional Accessories	Drain pump	External Model	-	-	-	-	-
		Internal Model	-	-	-	-	-
		Max. lifting Height / Displacement	mm / liter/h	-	-	-	-
	Air Filter		-	Option (Removable / Washable)	Option (Removable / Washable)	Option (Removable / Washable)	Option (Removable / Washable)

NOTE

- Specifications may be subject to change without prior notice.
- 1)* Capacities are based on (Equivalent refrigerant piping : 5m, Level differences : 0m)
  - Cooling : Indoor temperature : 27°C DB, 19°C WB / Outdoor temperature : 35°C DB, 24°C WB
  - Heating : Indoor temperature : 20°C DB, 15°C WB / Outdoor temperature : 7°C DB, 6°C WB
- 2)* Select wire size based on the value of MCA
- 3)* Sound pressure level is obtained in an anechoic room.
  - Sound pressure level is a relative value, depending on the distance and acoustic environment.
  - Sound pressure level may differ depending on operation condition.
  - dBA = A-weighted sound pressure level
  - Reference acoustic pressure 0 dB = 20uPa
- 4)* Sound power level is an absolute value that a sound source generates.
  - dBA = A-weighted sound power level
  - Reference power : 1pW
  - Measured according to ISO 3741
- 5)* These products contain R410A (GWP=2,088) which is fluorinated greenhouse gas.

2. Specification

2-2. Indoor units

Home Duct

Type				Home Duct	Home Duct	Home Duct	Home Duct
Model				AJ026TNLDKH/EA	AJ035TNLDKH/EA	AJ052TNLDKH/EA	AJ071TNLDKH/EA
Power Supply			Φ, #, V, Hz	1,2,220-240,50	1,2,220-240,50	1,2,220-240,50	1,2,220-240,50
Mode			-	HP	HP	HP	HP
Performance	Capacity (Nominal)	Cooling 2)	kW	2.6	3.5	5.2	7.1
			Btu/h	8,900	11,900	17,700	24,200
		Heating 2)	kW	2.9	3.8	5.6	8.0
			Btu/h	9,900	13,000	19,100	27,300
Power	Power Input (Nominal)	Cooling 1)	W	40	40	50	115
		Heating 2)		40	40	50	115
	Current Input (Nominal)	Cooling 1)	A	0.4	0.4	0.45	1.1
		Heating 2)		0.4	0.4	0.45	1.1
Fan	Motor	Type	-	Sirroco Fan / BLDC	Sirroco Fan / BLDC	Sirroco Fan / BLDC	Sirroco Fan / BLDC
		Output x n	W	69 x 1	69 x 1	84 x 1	84 x 1
	Air Flow Rate	H/M/L (UL)	CMM	9.1 / 7.7 / 5.7	9.5 / 7.9 / 6.2	14.0 / 9.8 / 5.4	20.5 / 17.0 / 14.0
			l/s	152 / 128 / 95	158 / 130 / 103	233 / 163 / 90	342 / 283 / 233
	External Pressure	Min / Std / Max	mmAq	0 / 1 / 3	0 / 1 / 3	0 / 2 / 5.1	0 / 2 / 5.1
			Pa	0 / 19.6 / 39.2	0 / 19.6 / 39.2	0 / 19.6 / 50.0	0 / 19.6 / 50.0
Piping Connections	Liquid Pipe		Φ,mm	6.35	6.35	6.35	6.35
			Φ, inch	1/4	1/4	1/4	1/4
	Gas Pipe		Φ,mm	9.52	9.52	12.7	15.88
			Φ, inch	3/8	3/8	1/2	5/8
	Drain Pipe		Φ,mm	VP25 (OD 32, ID 25)	VP25 (OD 32, ID 25)	VP25 (OD 32, ID 25)	VP25 (OD 32, ID 25)
Field Wiring	Power Source Wire		mm²	1.5 ~ 2.5	1.5 ~ 2.5	1.5 ~ 2.5	1.5 ~ 2.5
	Transmission Cable		mm²	0.75 ~ 1.50	0.75 ~ 1.50	0.75 ~ 1.50	0.75 ~ 1.50
Refrigerant	Type		-	R410A	R410A	R410A	R410A
	Control Method		-	EEV NOT INCLUDED	EEV NOT INCLUDED	EEV NOT INCLUDED	EEV NOT INCLUDED
Sound	Sound Pressure	H/M/L	dB(A)	32 / 27 / 22	33 / 28 / 23	33 / 29 / 23	39 / 36 / 32
	Sound Power	Cooling		50	50	50	56
Dimensions	Net Weight		kg	14.8	14.8	18.9	22.0
	Shipping Weight		kg	17.7	17.7	21.8	25.5
	Net Dimensions (W×H×D)		mm	700 x 199 x 440	700 x 199 x 440	900 x 260 x 480	1,100 x 199 x 440
	Shipping Dimensions (W×H×D)		mm	949 x 280 x 544	949 x 280 x 544	1,170 x 340 x 595	1,351 x 280 x 544
Casing	Material		-	HIPS	HIPS	HIPS	HIPS
Drain pump	Drain pump		-	NOT INCLUDED	NOT INCLUDED	NOT INCLUDED	NOT INCLUDED
	Max. lifting Height / Displacement		mm / Liter/h	-	-	-	-

2. Specification

2-2. Indoor units

Type				Home Duct	Home Duct	Home Duct	Home Duct
Model				AJ026TNLDKH/EA	AJ035TNLDKH/EA	AJ052TNLDKH/EA	AJ071TNLDKH/EA
Additional Accessories	Drain pump	External Model	-	-	-	-	-
		Internal Model	-	-	-	-	-
		Max. lifting Height / Displacement	mm / liter/h	-	-	-	-
	Air Filter		-	Removable / Washable	Removable / Washable	Removable / Washable	Removable / Washable

NOTE

- Specifications may be subject to change without prior notice.
- 1)* Capacities are based on (Equivalent refrigerant piping : 5m, Level differences : 0m)
  - Cooling : Indoor temperature : 27°C DB, 19°C WB / Outdoor temperature : 35°C DB, 24°C WB
  - Heating : Indoor temperature : 20°C DB, 15°C WB / Outdoor temperature : 7°C DB, 6°C WB
- 2)* Select wire size based on the value of MCA
- 3)* Sound pressure level is obtained in an anechoic room.
  - Sound pressure level is a relative value, depending on the distance and acoustic environment.
  - Sound pressure level may differ depending on operation condition.
  - dBA = A-weighted sound pressure level
  - Reference acoustic pressure 0 dB = 20uPa
- 4)* Sound power level is an absolute value that a sound source generates.
  - dBA = A-weighted sound power level
  - Reference power : 1pW
  - Measured according to ISO 3741
- 5)* These products contain R410A (GWP=2,088) which is fluorinated greenhouse gas.

2. Specification

2-2. Indoor units

Home Duct

Type				Home Duct	Home Duct	Home Duct	Home Duct
Model				AJ026TNLPKH/EA	AJ035TNLPKH/EA	AJ052TNLPKH/EA	AJ071TNLPKH/EA
Power Supply			Φ, #, V, Hz	1,2,220-240,50	1,2,220-240,50	1,2,220-240,50	1,2,220-240,50
Mode			-	HP	HP	HP	HP
Performance	Capacity (Nominal)	Cooling 2)	kW	2.6	3.5	5.2	7.1
			Btu/h	8,900	11,900	17,700	24,200
		Heating 2)	kW	2.9	3.8	5.6	8.0
			Btu/h	9,900	13,000	19,100	27,300
Power	Power Input (Nominal)	Cooling 1)	W	40	40	50	115
		Heating 2)		40	40	50	115
	Current Input (Nominal)	Cooling 1)	A	0.4	0.4	0.45	1.1
		Heating 2)		0.4	0.4	0.45	1.1
Fan	Motor	Type	-	Sirroco Fan / BLDC	Sirroco Fan / BLDC	Sirroco Fan / BLDC	Sirroco Fan / BLDC
		Output x n	W	69 x 1	69 x 1	84 x 1	84 x 1
	Air Flow Rate	H/M/L (UL)	CMM	9.1 / 7.7 / 5.7	9.5 / 7.9 / 6.2	14.0 / 9.8 / 5.4	20.5 / 17.0 / 14.0
			l/s	152 / 128 / 95	158 / 130 / 103	233 / 163 / 90	342 / 283 / 233
	External Pressure	Min / Std / Max	mmAq	0 / 1 / 3	0 / 1 / 3	0 / 2 / 5.1	0 / 2 / 5.1
			Pa	0 / 19.6 / 39.2	0 / 19.6 / 39.2	0 / 19.6 / 50.0	0 / 19.6 / 50.0
Piping Connections	Liquid Pipe		Φ,mm	6.35	6.35	6.35	6.35
			Φ, inch	1/4	1/4	1/4	1/4
	Gas Pipe		Φ,mm	9.52	9.52	12.7	15.88
			Φ, inch	3/8	3/8	1/2	5/8
	Drain Pipe		Φ,mm	VP25 (OD 32, ID 25)	VP25 (OD 32, ID 25)	VP25 (OD 32, ID 25)	VP25 (OD 32, ID 25)
Field Wiring	Power Source Wire		mm²	1.5 ~ 2.5	1.5 ~ 2.5	1.5 ~ 2.5	1.5 ~ 2.5
	Transmission Cable		mm²	0.75 ~ 1.50	0.75 ~ 1.50	0.75 ~ 1.50	0.75 ~ 1.50
Refrigerant	Type		-	R410A	R410A	R410A	R410A
	Control Method		-	EEV NOT INCLUDED	EEV NOT INCLUDED	EEV NOT INCLUDED	EEV NOT INCLUDED
Sound	Sound Pressure	H/M/L	dB(A)	32 / 27 / 22	33 / 28 / 23	33 / 29 / 23	39 / 36 / 32
	Sound Power	Cooling		50	50	50	56
Dimensions	Net Weight		kg	15.0	15.0	19.0	22.0
	Shipping Weight		kg	18.0	18.0	22.0	25.5
	Net Dimensions (W×H×D)		mm	700 x 199 x 440	700 x 199 x 440	900 x 199 x 440	1,100 x 199 x 440
	Shipping Dimensions (W×H×D)		mm	949 x 280 x 544	949 x 280 x 544	1,151 x 280 x 544	1,351 x 280 x 544
Casing	Material		-	HIPS	HIPS	HIPS	HIPS
Drain pump	Drain pump		-	INCLUDED	INCLUDED	INCLUDED	INCLUDED
	Max. lifting Height / Displacement		mm / Liter/h	1200/24	1200/24	1200/24	1200/24

2. Specification

2-2. Indoor units

Type				Home Duct	Home Duct	Home Duct	Home Duct
Model				AJ026TNLPKH/EA	AJ035TNLPKH/EA	AJ052TNLPKH/EA	AJ071TNLPKH/EA
Additional Accessories	Drain pump	External Model	-	X	X	X	X
		Internal Model	-	X	X	X	X
		Max. lifting Height / Displacement	mm / liter/h	-	-	-	-
	Air Filter		-	Removable / Washable	Removable / Washable	Removable / Washable	Removable / Washable

NOTE

- Specifications may be subject to change without prior notice.
- 1)* Capacities are based on (Equivalent refrigerant piping : 5m, Level differences : 0m)
  - Cooling : Indoor temperature : 27°C DB, 19°C WB / Outdoor temperature : 35°C DB, 24°C WB
  - Heating : Indoor temperature : 20°C DB, 15°C WB / Outdoor temperature : 7°C DB, 6°C WB
- 2)* Select wire size based on the value of MCA
- 3)* Sound pressure level is obtained in an anechoic room.
  - Sound pressure level is a relative value, depending on the distance and acoustic environment.
  - Sound pressure level may differ depending on operation condition.
  - dBA = A-weighted sound pressure level
  - Reference acoustic pressure 0 dB = 20uPa
- 4)* Sound power level is an absolute value that a sound source generates.
  - dBA = A-weighted sound power level
  - Reference power : 1pW
  - Measured according to ISO 3741
- 5)* These products contain R410A (GWP=2,088) which is fluorinated greenhouse gas.

3. Electric Characteristics

Capacity	Model	Power Supply		Voltage Range		Nominal Running Current [A]		Current [A]		Fan Motor
kW		Hz	Voltage	Min. (-15%)	Max. (+15%)	Cooling	Heating	MCA	MFA	kW
4.0	AJ040TXJ2KH/EA	50/60	220~240	198	264	4.7	4.5	9.3	10.6	0.04
5.0	AJ050TXJ2KH/EA	50/60	220~240	198	264	6.0	6.2	11.9	13.8	0.04
6.8	AJ068TXJ3KH/EA	50/60	220~240	198	264	9.2	8.7	15.2	17.5	0.125
8.0	AJ080TXJ4KH/EA	50/60	220~240	198	264	10.9	9.7	18.2	20.8	0.125
10.0	AJ100TXJ5KH/EA	50/60	220~240	198	264	13.3	13.4	25.0	28.8	0.125
12.5	AJ125TXJ5KH/EA	50/60	220~240	198	264	18.1	15.8	34.0	40.0	0.125
14.0	AJ140TXJ5KH/EA	50/60	220~240	198	264	22.1	19.6	34.0	40.0	0.125

NOTE

- MCA : Minimum circuit amperes
- MFA : Maximum fuse amperes
- Select wire size based on the value of MCA

4. Combination Table

4-1 AJ040TXJ2KH/EA

COOLING

Unit	Indoor Unit		Cooling Capacity (W)		Capacity			Power Consumption			Current			EER
	A	B	A	B	W			W			A			W/W
					MIN	Rated	MAX	MIN	Rated	MAX	MIN	Rated	MAX	Rated
1	020		2,000		1,250	2,000	2,880	300	730	880	1.4	3.3	4.0	2.74
	025		2,500		1,250	2,500	3,120	300	800	960	1.4	3.7	4.4	3.13
	035		3,500		1,250	3,500	4,200	300	1,090	1,310	1.4	5.0	6.0	3.21
2	020	020	2,000	2,000	1,250	4,000	4,500	300	1,180	1,330	1.4	5.4	6.1	3.39
	020	020	2,000	2,000	1,300	4,000	4,500	350	1,180	1,330	1.6	5.4	6.1	3.39
	020	035	1,470	2,530	1,300	4,000	4,500	350	1,180	1,330	1.6	5.4	6.1	3.39
	025	025	2,000	2,000	1,300	4,000	4,500	350	1,180	1,330	1.6	5.4	6.1	3.39
	025	035	1,710	2,290	1,300	4,000	4,500	350	1,020	1,330	1.6	4.7	6.1	3.92

HEATING

Unit	Indoor Unit		Heating Capacity (W)		Capacity			Power Consumption			Current			COP
	A	B	A	B	W			W			A			W/W
					MIN	Rated	MAX	MIN	Rated	MAX	MIN	Rated	MAX	Rated
1	020		2,200		1,000	2,200	2,990	260	880	1,010	1.2	4.0	4.6	2.50
	025		3,200		1,000	3,200	3,340	260	1,050	1,290	1.2	4.8	5.9	3.05
	035		4,000		1,000	4,000	4,370	260	1,300	1,620	1.2	5.9	7.4	3.08
2	020	020	2,200	2,200	1,000	4,400	4,700	280	1,160	1,390	1.3	5.3	6.4	3.79
	020	020	2,200	2,200	1,000	4,400	4,700	280	1,160	1,400	1.3	5.3	6.4	3.79
	020	035	1,620	2,780	1,000	4,400	4,700	280	1,160	1,400	1.3	5.3	6.4	3.79
	025	025	2,200	2,200	1,000	4,400	4,700	280	1,160	1,400	1.3	5.3	6.4	3.79
	025	035	1,890	2,510	1,000	4,400	4,700	280	990	1,400	1.3	4.5	6.4	4.44

NOTE

1. Cooling capacity is based on 27°CDB / 19°CWB (indoor temperature), 35°CDB (outdoor temperature).
2. Heating capacity is based on 20°CDB (indoor temperature), 7°CDB/6°CWB (outdoor temperature).
3. The above is the value for connecting with the following indoor units.
   - AJ***TNAPKH : Premium Wind Free
4. You can not connect a single unit.
5. Power consumption include indoor unit power.

4. Combination Table

4-2 AJ050TXJ2KH/EA

COOLING

Unit	Indoor Unit		Cooling Capacity (W)		Capacity			Power Consumption			Current			EER
	A	B	A	B	W			W			A			W/W
					MIN	Rated	MAX	MIN	Rated	MAX	MIN	Rated	MAX	Rated
1	020		2,000		1,250	2,000	2,880	300	730	880	1.4	3.3	4.0	2.74
	025		2,500		1,250	2,500	3,120	300	800	960	1.4	3.7	4.4	3.13
	035		3,500		1,250	3,500	4,200	300	1,090	1,310	1.4	5.0	6.0	3.21
	050		5,000		1,250	5,000	5,200	300	1,600	1,740	1.4	7.3	8.0	3.13
2	020	020	2,000	2,000	1,300	4,000	4,800	350	1,245	1,490	1.6	5.7	6.8	3.21
	020	025	2,010	2,590	1,300	4,600	5,200	350	1,430	1,720	1.6	6.5	7.9	3.22
	020	035	1,840	3,160	1,400	5,000	5,400	350	1,490	1,780	1.6	6.8	8.1	3.36
	020	050	1,400	3,600	1,400	5,000	5,400	350	1,450	1,800	1.6	6.6	8.2	3.45
	025	025	2,500	2,500	1,400	5,000	5,400	350	1,500	1,780	1.6	6.9	8.1	3.33
	025	035	2,140	2,860	1,400	5,000	5,400	350	1,500	1,780	1.6	6.9	8.1	3.33
	025	050	1,670	3,330	1,400	5,000	5,400	350	1,450	1,700	1.6	6.6	7.8	3.45
	035	035	2,500	2,500	1,400	5,000	5,400	350	1,500	1,780	1.6	6.9	8.1	3.33
	035	050	2,000	3,000	1,400	5,000	5,400	350	1,320	1,700	1.6	6.0	7.8	3.79

HEATING

Unit	Indoor Unit		Heating Capacity (W)		Capacity			Power Consumption			Current			COP
	A	B	A	B	W			W			A			W/W
					MIN	Rated	MAX	MIN	Rated	MAX	MIN	Rated	MAX	Rated
1	020		2,200		1,050	2,200	2,990	260	880	1,010	1.2	4.0	4.6	2.50
	025		3,200		1,050	3,200	3,340	260	1,050	1,290	1.2	4.8	5.9	3.05
	035		4,000		1,050	4,000	4,370	260	1,300	1,620	1.2	5.9	7.4	3.08
	050		5,400		1,050	5,400	5,600	260	1,650	2,060	1.2	7.6	9.4	3.27
2	020	020	2,200	2,200	1,100	4,400	4,750	280	1,220	1,390	1.3	5.6	6.4	3.61
	020	025	2,230	2,870	1,100	5,100	5,460	280	1,410	1,610	1.3	6.5	7.4	3.62
	020	035	2,100	3,600	1,100	5,700	6,300	280	1,520	1,900	1.3	7.0	8.7	3.75
	020	050	1,600	4,100	1,100	5,700	6,400	280	1,440	1,800	1.3	6.6	8.2	3.96
	025	025	2,850	2,850	1,100	5,700	6,300	208	1,550	1,940	1.0	7.1	8.9	3.68
	025	035	2,440	3,260	1,100	5,700	6,300	280	1,550	1,850	1.3	7.1	8.5	3.68
	025	050	1,900	3,800	1,100	5,700	6,400	280	1,440	1,750	1.3	6.6	8.0	3.96
	035	035	2,850	2,850	1,100	5,700	6,300	280	1,470	1,840	1.3	6.7	8.4	3.88
	035	050	2,280	3,420	1,100	5,700	6,400	280	1,350	1,750	1.3	6.2	8.0	4.22

NOTE

1 Cooling capacity is based on 27°CDB / 19°CWB (indoor temperature), 35°CDB (outdoor temperature).

2 Heating capacity is based on 20°CDB (indoor temperature), 7°CDB/6°CWB (outdoor temperature).

3 The above is the value for connecting with the following indoor units.
- AJ***TNAPKH : Premium Wind Free

4 You can not connect a single unit.

5 Power consumption include indoor unit power.

4. Combination Table

4-3 AJ068TXJ3KH/EA

COOLING

Unit	Indoor Unit			Cooling Capacity (W)			Capacity			Power Consumption			Current			EER
	A	B	B	A	B	B	W			W			A			W/W
							MIN	Rated	MAX	MIN	Rated	MAX	MIN	Rated	MAX	Rated
1	020			2,000			1,280	2,000	2,880	400	630	930	1.8	2.9	4.3	3.17
	025			2,500			1,280	2,500	3,120	400	790	1,010	1.8	3.6	4.6	3.16
	035			3,500			1,280	3,500	4,200	400	1,070	1,370	1.8	4.9	6.3	3.27
	050			5,000			1,300	5,000	5,800	400	1,620	1,900	1.8	7.4	8.7	3.09
2	020	020		2,000	2,000		1,300	4,000	4,800	420	1,240	1,480	1.9	5.7	6.8	3.23
	020	025		1,970	2,530		1,300	4,500	5,520	420	1,410	1,680	1.9	6.5	7.7	3.19
	020	035		2,030	3,470		1,300	5,500	6,550	420	1,830	2,470	1.9	8.4	11.3	3.01
	020	050		1,820	4,680		1,300	6,500	7,740	420	2,000	2,690	1.9	9.2	12.3	3.25
	025	025		2,500	2,500		1,300	5,000	5,950	420	1,660	2,260	1.9	7.6	10.3	3.01
	025	035		2,570	3,430		1,300	6,000	7,140	420	1,980	2,670	1.9	9.1	12.2	3.03
	025	050		2,270	4,530		1,380	6,800	8,090	430	2,090	2,660	2.0	9.6	12.2	3.25
	035	035		3,250	3,250		1,300	6,500	7,740	420	2,010	2,700	1.9	9.2	12.4	3.23
	035	050		2,720	4,080		1,380	6,800	8,090	430	2,100	2,670	2.0	9.6	12.2	3.24
	050	050		3,400	3,400		1,380	6,800	8,090	430	2,060	2,660	2.0	9.4	12.2	3.30
3	020	020	020	2,000	2,000	2,000	1,800	6,000	7,400	440	1,970	2,650	2.0	9.0	12.1	3.05
	020	020	025	1,980	1,980	2,540	1,800	6,500	8,000	440	2,000	2,690	2.0	9.2	12.3	3.25
	020	020	035	1,830	1,830	3,140	1,800	6,800	8,400	440	2,070	2,700	2.0	9.5	12.4	3.29
	020	020	050	1,490	1,490	3,830	1,800	6,800	8,400	440	2,000	2,690	2.0	9.2	12.3	3.40
	020	025	025	1,820	2,340	2,340	1,800	6,500	8,000	440	2,030	2,690	2.0	9.3	12.3	3.20
	020	025	035	1,700	2,190	2,910	1,800	6,800	8,400	440	2,090	2,690	2.0	9.6	12.3	3.25
	020	025	050	1,400	1,800	3,600	1,800	6,800	8,400	440	2,010	2,690	2.0	9.2	12.3	3.38
	020	035	035	1,540	2,630	2,630	1,800	6,800	8,400	440	2,010	2,700	2.0	9.2	12.4	3.38
	020	035	050	1,290	2,210	3,310	1,800	6,800	8,400	440	2,050	2,700	2.0	9.4	12.4	3.32
	025	025	025	2,270	2,270	2,270	1,800	6,800	8,400	440	2,060	2,690	2.0	9.4	12.3	3.30
	025	025	035	2,040	2,040	2,720	1,800	6,800	8,400	440	2,130	2,700	2.0	9.7	12.4	3.19
	025	025	050	1,700	1,700	3,400	1,800	6,800	8,400	440	2,030	2,690	2.0	9.3	12.3	3.35
	025	035	035	1,850	2,470	2,470	1,800	6,800	8,400	440	2,020	2,700	2.0	9.2	12.4	3.37
	025	035	050	1,570	2,090	3,140	1,800	6,800	8,400	440	2,070	2,700	2.0	9.5	12.4	3.29
	035	035	035	2,270	2,270	2,270	1,800	6,800	8,400	440	2,000	2,710	2.0	9.2	12.4	3.40

4. Combination Table

4-3 AJ068TXJ3KH/EA

HEATING

Unit	Indoor Unit			Heating Capacity (W)			Capacity			Power Consumption			Current			EER
							W			W			A			W/W
	A	B	B	A	B	B	MIN	Rated	MAX	MIN	Rated	MAX	MIN	Rated	MAX	Rated
1	020			2,000			1,300	2,000	2,990	380	950	1,190	1.7	4.3	5.4	2.11
	025			3,200			1,300	3,200	3,340	380	1,150	1,360	1.7	5.3	6.2	2.78
	035			4,000			1,300	4,000	4,370	380	1,350	1,780	1.7	6.2	8.1	2.96
	050			6,000			1,350	6,000	6,300	380	1,820	2,050	1.7	8.3	9.4	3.30
2	020	020		2,200	2,200		1,400	4,400	5,060	380	1,220	1,600	1.7	5.6	7.3	3.61
	020	025		2,410	3,090		1,400	5,500	6,330	380	1,490	2,000	1.7	6.8	9.2	3.69
	020	035		2,280	3,920		1,400	6,200	7,130	380	1,670	2,300	1.7	7.6	10.5	3.71
	020	050		2,180	5,620		1,400	7,800	8,970	380	1,990	2,700	1.7	9.1	12.4	3.92
	025	025		3,300	3,300		1,400	6,600	7,590	380	1,890	2,600	1.7	8.6	11.9	3.49
	025	035		3,130	4,170		1,400	7,300	8,400	380	1,950	2,600	1.7	8.9	11.9	3.74
	025	050		2,600	5,200		1,400	7,800	8,970	380	2,040	2,800	1.7	9.3	12.8	3.82
	035	035		3,900	3,900		1,400	7,800	8,970	380	1,990	2,700	1.7	9.1	12.4	3.92
	035	050		3,200	4,800		1,400	8,000	9,200	380	2,090	2,800	1.7	9.6	12.8	3.83
	050	050		4,000	4,000		1,400	8,000	9,200	380	2,080	2,800	1.7	9.5	12.8	3.85
3	020	020	020	2,200	2,200	2,200	1,400	6,600	8,100	380	1,760	2,400	1.7	8.1	11.0	3.75
	020	020	025	2,340	2,340	3,010	1,400	7,700	9,500	380	1,830	2,500	1.7	8.4	11.4	4.21
	020	020	035	2,150	2,150	3,690	1,400	8,000	9,800	380	1,920	2,600	1.7	8.8	11.9	4.17
	020	020	050	1,750	1,750	4,500	1,400	8,000	9,800	380	1,960	2,600	1.7	9.0	11.9	4.08
	020	025	025	2,240	2,880	2,880	1,400	8,000	9,800	380	1,880	2,500	1.7	8.6	11.4	4.26
	020	025	035	2,000	2,570	3,430	1,400	8,000	9,800	380	1,910	2,600	1.7	8.7	11.9	4.19
	020	025	050	1,650	2,120	4,240	1,400	8,000	9,800	380	1,920	2,600	1.7	8.8	11.9	4.17
	020	035	035	1,810	3,100	3,100	1,400	8,000	9,800	380	1,960	2,600	1.7	9.0	11.9	4.08
	020	035	050	1,510	2,590	3,890	1,400	8,000	9,800	380	1,950	2,600	1.7	8.9	11.9	4.10
	025	025	025	2,670	2,670	2,670	1,400	8,000	9,800	380	1,930	2,600	1.7	8.8	11.9	4.15
	025	025	035	2,400	2,400	3,200	1,400	8,000	9,800	380	1,910	2,600	1.7	8.7	11.9	4.19
	025	025	050	2,000	2,000	4,000	1,400	8,000	9,800	380	1,950	2,600	1.7	8.9	11.9	4.10
	025	035	035	2,180	2,910	2,910	1,400	8,000	9,800	380	1,930	2,600	1.7	8.8	11.9	4.15
	025	035	050	1,850	2,460	3,690	1,400	8,000	9,800	380	1,980	2,700	1.7	9.1	12.4	4.04
	035	035	035	2,670	2,670	2,670	1,400	8,000	9,800	380	1,910	2,600	1.7	8.7	11.9	4.19

NOTE

1. Cooling capacity is based on 27°CDB / 19°CWB (indoor temperature), 35°CDB (outdoor temperature).
2. Heating capacity is based on 20°CDB (indoor temperature), 7°CDB/6°CWB (outdoor temperature).
3. The above is the value for connecting with the following indoor units.
   - AJ***TNAPKH : Premium Wind Free
4. You can not connect a single unit.
5. Power consumption include indoor unit power.

4. Combination Table

4-4 AJ080TXJ4KH/EA

COOLING

Unit	Indoor Unit				Cooling Capacity (W)				Capacity			Power Consumption			Current			EER
									W			W			A			W/W
	A	B	C	D	A	B	C	D	MIN	Rated	MAX	MIN	Rated	MAX	MIN	Rated	MAX	Rated
1	020				2,000				1,470	2,000	2,900	380	970	1,050	1.7	4.4	4.8	2.06
	025				2,500				1,520	2,500	3,300	390	1,180	1,280	1.8	5.4	5.9	2.12
	035				3,500				1,600	3,500	3,700	400	1,470	1,590	1.8	6.7	7.3	2.38
	050				5,000				1,750	5,000	6,300	420	2,120	2,300	1.9	9.7	10.5	2.36
	068				6,200				1,900	6,200	7,000	580	2,300	2,820	2.7	10.5	12.9	2.70
2	020	020			2,000	2,000			1,640	4,000	4,800	410	1,240	1,490	1.9	5.7	6.8	3.23
	020	025			2,010	2,590			1,690	4,600	5,520	420	1,430	1,720	1.9	6.5	7.9	3.22
	020	035			2,030	3,470			1,770	5,500	6,600	430	1,710	2,050	2.0	7.8	9.4	3.22
	020	050			2,020	5,180			1,900	7,200	8,640	580	2,240	2,690	2.7	10.3	12.3	3.21
	020	068			1,680	5,770			1,900	7,450	8,640	580	2,350	2,730	2.7	10.8	12.5	3.17
	025	025			2,600	2,600			1,750	5,200	6,240	420	1,660	2,000	1.9	7.6	9.2	3.13
	025	035			2,610	3,490			1,820	6,100	7,320	440	1,900	2,260	2.0	8.7	10.3	3.21
	025	050			2,400	4,800			1,900	7,200	8,640	580	2,240	2,690	2.7	10.3	12.3	3.21
	025	068			2,060	5,490			1,900	7,550	8,760	580	2,380	2,760	2.7	10.9	12.6	3.17
	035	035			3,500	3,500			1,900	7,000	8,000	580	2,490	2,620	2.7	11.4	12.0	2.81
	035	050			2,940	4,410			1,900	7,350	8,820	580	2,290	2,750	2.7	10.5	12.6	3.21
	035	068			2,570	5,130			1,900	7,700	8,930	580	2,400	2,780	2.7	11.0	12.7	3.21
	050	050			3,830	3,830			1,900	7,660	9,180	580	2,380	2,860	2.7	10.9	13.1	3.22
	050	068			3,340	4,460			1,900	7,800	8,970	580	2,430	2,820	2.7	11.1	12.9	3.21
3	020	020	020		2,000	2,000	2,000		1,810	6,000	7,200	440	1,850	2,310	2.0	8.5	10.6	3.24
	020	020	025		2,010	2,010	2,580		1,870	6,600	7,920	440	2,000	2,500	2.0	9.2	11.4	3.30
	020	020	035		1,940	1,940	3,320		1,900	7,200	9,000	580	2,290	2,780	2.7	10.5	12.7	3.14
	020	020	050		1,650	1,650	4,250		1,900	7,550	9,180	580	2,260	2,730	2.7	10.3	12.5	3.34
	020	020	068		1,470	1,470	5,050		1,900	8,000	9,300	580	2,340	2,870	2.7	10.7	13.1	3.42
	020	025	025		1,960	2,520	2,520		1,900	7,000	8,640	580	2,220	2,680	2.7	10.2	12.3	3.15
	020	025	035		1,830	2,350	3,130		1,900	7,310	9,060	580	2,220	2,690	2.7	10.2	12.3	3.29
	020	025	050		1,580	2,030	4,050		1,900	7,650	9,250	580	2,260	2,730	2.7	10.3	12.5	3.38
	020	025	068		1,400	1,800	4,800		1,900	8,000	9,300	580	2,340	2,870	2.7	10.7	13.1	3.42
	020	035	035		1,700	2,920	2,920		1,900	7,540	9,160	580	2,260	2,730	2.7	10.3	12.5	3.34
	020	035	050		1,490	2,560	3,830		1,900	7,880	9,300	580	2,330	2,820	2.7	10.7	12.9	3.38
	020	050	050		1,300	3,350	3,350		1,900	8,000	9,300	580	2,370	2,910	2.7	10.8	13.3	3.38
	025	025	025		2,400	2,400	2,400		1,900	7,200	9,030	580	2,180	2,640	2.7	10.0	12.1	3.30
	025	025	035		2,230	2,230	2,970		1,900	7,420	9,130	580	2,210	2,690	2.7	10.1	12.3	3.36
	025	025	050		1,940	1,940	3,890		1,900	7,770	9,300	580	2,280	2,780	2.7	10.4	12.7	3.41
	025	025	068		1,710	1,710	4,570		1,900	8,000	9,300	580	2,370	2,910	2.7	10.8	13.3	3.38
	025	035	035		2,090	2,780	2,780		1,900	7,650	9,230	580	2,250	2,730	2.7	10.3	12.5	3.40
	025	035	050		1,850	2,460	3,690		1,900	8,000	9,300	580	2,330	2,870	2.7	10.7	13.1	3.43
	035	035	035		2,630	2,630	2,630		1,900	7,890	9,300	580	2,330	2,820	2.7	10.7	12.9	3.39
	035	035	050		2,290	2,290	3,430		1,900	8,000	9,300	580	2,370	2,910	2.7	10.8	13.3	3.38

4. Combination Table

4-4 AJ080TXJ4KH/EA

COOLING

Unit	Indoor Unit				Cooling Capacity (W)				Capacity			Power Consumption			Current			EER
									W			W			A			W/W
	A	B	C	D	A	B	C	D	MIN	Rated	MAX	MIN	Rated	MAX	MIN	Rated	MAX	Rated
4	020	020	020	020	1,830	1,830	1,830	1,830	1,900	7,320	9,050	580	2,210	2,690	2.7	10.1	12.3	3.31
	020	020	020	025	1,740	1,740	1,740	2,230	1,900	7,440	9,120	580	2,210	2,690	2.7	10.1	12.3	3.37
	020	020	020	035	1,620	1,620	1,620	2,780	1,900	7,650	9,220	580	2,250	2,730	2.7	10.3	12.5	3.40
	020	020	020	050	1,440	1,440	1,440	3,690	1,900	8,000	9,300	580	2,380	2,870	2.7	10.9	13.1	3.36
	020	020	025	025	1,650	1,650	2,120	2,120	1,900	7,540	9,180	580	2,260	2,730	2.7	10.3	12.5	3.34
	020	020	025	035	1,550	1,550	2,000	2,660	1,900	7,760	9,280	580	2,270	2,780	2.7	10.4	12.7	3.42
	020	020	025	050	1,370	1,370	1,760	3,510	1,900	8,000	9,300	580	2,380	2,870	2.7	10.9	13.1	3.36
	020	020	035	035	1,470	1,470	2,530	2,530	1,900	8,000	9,300	580	2,350	2,870	2.7	10.8	13.1	3.40
	020	025	025	025	1,580	2,030	2,030	2,030	1,900	7,650	9,250	580	2,260	2,730	2.7	10.3	12.5	3.38
	020	025	025	035	1,490	1,920	1,920	2,560	1,900	7,890	9,300	580	2,330	2,820	2.7	10.7	12.9	3.39
	020	025	025	050	1,300	1,670	1,670	3,350	1,900	8,000	9,300	580	2,380	2,910	2.7	10.9	13.3	3.36
	020	025	035	035	1,400	1,800	2,400	2,400	1,900	8,000	9,300	580	2,380	2,870	2.7	10.9	13.1	3.36
	025	025	025	025	1,940	1,940	1,940	1,940	1,900	7,760	9,300	580	2,290	2,780	2.7	10.5	12.7	3.39
	025	025	025	035	1,850	1,850	1,850	2,460	1,900	8,000	9,300	580	2,380	2,870	2.7	10.9	13.1	3.36
	025	025	035	035	1,710	1,710	2,290	2,290	1,900	8,000	9,300	580	2,380	2,910	2.7	10.9	13.3	3.36

HEATING

Unit	Indoor Unit				Heating Capacity (W)				Capacity			Power Consumption			Current			EER
									W			W			A			W/W
	A	B	C	D	A	B	C	D	MIN	Rated	MAX	MIN	Rated	MAX	MIN	Rated	MAX	Rated
1	020				2,200				1,790	2,200	2,500	580	1,220	1,320	2.7	5.6	6.0	1.80
	025				3,200				1,820	3,200	3,500	590	1,360	1,480	2.7	6.2	6.8	2.35
	035				4,000				1,930	4,000	4,300	600	1,570	1,700	2.7	7.2	7.8	2.55
	050				6,000				2,080	6,000	6,400	610	2,270	2,460	2.8	10.4	11.3	2.64
	068				8,000				2,200	8,000	8,200	620	2,760	2,820	2.8	12.6	12.9	2.90
2	020	020			2,200	2,200			1,980	4,400	5,060	600	1,220	1,530	2.7	5.6	7.0	3.61
	020	025			2,230	2,870			2,040	5,100	5,870	610	1,410	1,700	2.8	6.5	7.8	3.62
	020	035			2,210	3,790			2,110	6,000	6,900	610	1,760	2,110	2.8	8.1	9.7	3.41
	020	050			2,180	5,620			2,200	7,800	9,130	620	2,160	2,580	2.8	9.9	11.8	3.61
	020	068			1,830	6,290			2,200	8,120	9,300	620	2,250	2,600	2.8	10.3	11.9	3.61
	025	025			2,900	2,900			2,100	5,800	6,670	610	1,600	1,930	2.8	7.3	8.8	3.63
	025	035			2,870	3,830			2,170	6,700	7,710	610	1,940	2,330	2.8	8.9	10.7	3.45
	025	050			2,600	5,200			2,200	7,800	9,360	620	2,160	2,600	2.8	9.9	11.9	3.61
	025	068			2,280	6,070			2,200	8,350	9,600	620	2,340	2,700	2.8	10.7	12.4	3.57
	035	035			3,800	3,800			2,200	7,600	8,740	620	2,180	2,510	2.8	10.0	11.5	3.49
	035	050			3,250	4,870			2,200	8,120	9,500	620	2,250	2,650	2.8	10.3	12.1	3.61
	035	068			2,820	5,630			2,200	8,450	9,700	620	2,380	2,700	2.8	10.9	12.4	3.55
	050	050			4,250	4,250			2,200	8,500	9,950	620	2,340	2,750	2.8	10.7	12.6	3.63
	050	068			3,710	4,940			2,200	8,650	9,900	620	2,420	2,800	2.8	11.1	12.8	3.57

4. Combination Table

4-4 AJ080TXJ4KH/EA

HEATING

Unit	Indoor Unit				Heating Capacity (W)				Capacity			Power Consumption			Current			EER
	A	B	C	D	A	B	C	D	W			W			A			W/W
									MIN	Rated	MAX	MIN	Rated	MAX	MIN	Rated	MAX	Rated
3	020	020	020		2,200	2,200	2,200		2,170	6,600	7,590	610	1,830	2,220	2.8	8.4	10.2	3.61
	020	020	025		2,220	2,220	2,860		2,200	7,300	8,400	620	1,950	2,340	2.8	8.9	10.7	3.74
	020	020	035		2,210	2,210	3,780		2,200	8,200	9,590	620	2,150	2,570	2.8	9.8	11.8	3.81
	020	020	050		1,890	1,890	4,850		2,200	8,620	10,090	620	2,140	2,610	2.8	9.8	11.9	4.03
	020	020	068		1,610	1,610	5,530		2,200	8,750	10,500	620	2,150	2,750	2.8	9.8	12.6	4.07
	020	025	025		2,240	2,880	2,880		2,200	8,000	9,360	620	2,080	2,500	2.8	9.5	11.4	3.85
	020	025	035		2,130	2,740	3,660		2,200	8,530	9,980	620	2,100	2,690	2.8	9.6	12.3	4.06
	020	025	050		1,790	2,300	4,600		2,200	8,680	10,150	620	2,140	2,740	2.8	9.8	12.5	4.06
	020	025	068		1,580	2,030	5,400		2,200	9,000	10,900	620	2,250	2,820	2.8	10.3	12.9	4.00
	020	035	035		1,940	3,330	3,330		2,200	8,600	10,070	620	2,140	2,740	2.8	9.8	12.5	4.02
	020	035	050		1,660	2,840	4,260		2,200	8,750	10,500	620	2,150	2,750	2.8	9.8	12.6	4.07
	020	050	050		1,470	3,770	3,770		2,200	9,000	10,900	620	2,250	2,820	2.8	10.3	12.9	4.00
	025	025	025		2,840	2,840	2,840		2,200	8,520	9,960	620	2,090	2,680	2.8	9.6	12.3	4.08
	025	025	035		2,580	2,580	3,440		2,200	8,590	10,050	620	2,100	2,690	2.8	9.6	12.3	4.09
	025	025	050		2,190	2,190	4,380		2,200	8,750	10,500	620	2,140	2,740	2.8	9.8	12.5	4.09
	025	025	068		1,930	1,930	5,140		2,200	9,000	10,900	620	2,250	2,820	2.8	10.3	12.9	4.00
	025	035	035		2,360	3,150	3,150		2,200	8,660	10,130	620	2,140	2,740	2.8	9.8	12.5	4.05
	025	035	050		2,080	2,770	4,150		2,200	9,000	10,500	620	2,150	2,750	2.8	9.8	12.6	4.19
	035	035	035		2,910	2,910	2,910		2,200	8,730	10,220	620	2,150	2,750	2.8	9.8	12.6	4.06
	035	035	050		2,570	2,570	3,860		2,200	9,000	10,900	620	2,180	2,790	2.8	10.0	12.8	4.13
4	020	020	020	020	2,130	2,130	2,130	2,130	2,200	8,520	9,970	620	2,100	2,690	2.8	9.6	12.3	4.06
	020	020	020	025	2,000	2,000	2,000	2,570	2,200	8,580	10,040	620	2,100	2,690	2.8	9.6	12.3	4.09
	020	020	020	035	1,830	1,830	1,830	3,150	2,200	8,650	10,120	620	2,140	2,740	2.8	9.8	12.5	4.04
	020	020	020	050	1,620	1,620	1,620	4,150	2,200	9,000	10,900	620	2,130	2,820	2.8	9.7	12.9	4.23
	020	020	025	025	1,890	1,890	2,430	2,430	2,200	8,640	10,100	620	2,140	2,740	2.8	9.8	12.5	4.04
	020	020	025	035	1,740	1,740	2,240	2,990	2,200	8,710	10,190	620	2,140	2,740	2.8	9.8	12.5	4.07
	020	020	025	050	1,540	1,540	1,980	3,950	2,200	9,000	10,900	620	2,130	2,820	2.8	9.7	12.9	4.23
	020	020	035	035	1,620	1,620	2,770	2,770	2,200	8,780	10,270	620	2,180	2,790	2.8	10.0	12.8	4.03
	020	025	025	025	1,790	2,300	2,300	2,300	2,200	8,690	10,170	620	2,140	2,740	2.8	9.8	12.5	4.06
	020	025	025	035	1,660	2,130	2,130	2,840	2,200	8,760	10,250	620	2,180	2,790	2.8	10.0	12.8	4.02
	020	025	025	050	1,470	1,880	1,880	3,770	2,200	9,000	10,900	620	2,130	2,820	2.8	9.7	12.9	4.23
	020	025	035	035	1,580	2,030	2,700	2,700	2,200	9,000	10,900	620	2,130	2,820	2.8	9.7	12.9	4.23
	025	025	025	025	2,190	2,190	2,190	2,190	2,200	8,760	10,240	620	2,140	2,740	2.8	9.8	12.5	4.09
	025	025	025	035	2,080	2,080	2,080	2,770	2,200	9,000	10,900	620	2,130	2,790	2.8	9.7	12.8	4.23
	025	025	035	035	1,930	1,930	2,570	2,570	2,200	9,000	10,900	620	2,130	2,820	2.8	9.7	12.9	4.23

NOTE

1 Cooling capacity is based on 27°CDB / 19°CWB (indoor temperature), 35°CDB (outdoor temperature).

2 Heating capacity is based on 20°CDB (indoor temperature), 7°CDB/6°CWB (outdoor temperature).

3 The above is the value for connecting with the following indoor units.
- AJ***TNAPKH : Premium Wind Free

4 You can not connect a single unit.

5 Power consumption include indoor unit power.

4. Combination Table

4-5 AJ100TXJ5KH/EA

COOLING

Unit	Indoor Unit					Cooling Capacity (W)					Capacity			Power Consumption			Current			EER
	A	B	C	D	E	A	B	C	D	E	W			W			A			W/W
											MIN	Rated	MAX	MIN	Rated	MAX	MIN	Rated	MAX	Rated
1	020					2,000					1,600	2,000	2,600	580	960	1,050	2.7	4.4	4.8	2.08
	025					2,500					1,600	2,500	3,200	580	1,100	1,190	2.7	5.0	5.4	2.27
	035					3,500					1,620	3,500	3,800	590	1,360	1,480	2.7	6.2	6.8	2.57
	050					5,000					1,650	5,000	6,300	600	1,970	2,140	2.7	9.0	9.8	2.54
	068					6,200					1,710	6,200	7,600	620	2,380	2,580	2.8	10.9	11.8	2.61
2	020	020				2,000	2,000				1,680	4,000	4,900	610	1,260	1,650	2.8	5.8	7.6	3.17
	020	025				1,970	2,530				1,680	4,500	5,530	610	1,400	1,860	2.8	6.4	8.5	3.21
	020	035				2,030	3,470				1,710	5,500	6,950	620	1,750	2,330	2.8	8.0	10.7	3.14
	020	050				1,960	5,040				2,210	7,000	8,690	630	2,190	2,910	2.9	10.0	13.3	3.20
	020	068				1,820	6,250				2,280	8,070	10,110	650	2,550	3,390	3.0	11.7	15.5	3.16
	025	025				2,500	2,500				1,680	5,000	6,320	610	1,600	2,120	2.8	7.3	9.7	3.13
	025	035				2,570	3,430				1,710	6,000	7,270	620	1,840	2,430	2.8	8.4	11.1	3.26
	025	050				2,500	5,000				2,210	7,500	9,320	630	2,340	3,120	2.9	10.7	14.3	3.21
	025	068				2,220	5,930				2,280	8,150	10,110	650	2,550	3,390	3.0	11.7	15.5	3.20
	035	035				3,500	3,500				2,170	7,000	8,530	620	2,130	2,850	2.8	9.7	13.0	3.29
	035	050				3,210	4,810				2,240	8,020	9,950	640	2,490	3,330	2.9	11.4	15.2	3.22
	035	068				2,860	5,730				2,480	8,590	10,740	660	2,700	3,600	3.0	12.4	16.5	3.18
	050	050				4,280	4,280				2,440	8,560	10,430	650	2,650	3,500	3.0	12.1	16.0	3.23
	050	068				3,780	5,040				2,510	8,820	10,900	670	2,760	3,670	3.1	12.6	16.8	3.20
	068	068				4,550	4,550				3,110	9,100	11,000	690	2,830	3,740	3.2	13.0	17.1	3.22
3	020	020	020			2,000	2,000	2,000			1,760	6,000	7,270	640	1,870	2,460	2.9	8.6	11.3	3.21
	020	020	025			1,980	1,980	2,540			1,760	6,500	7,900	640	2,010	2,660	2.9	9.2	12.2	3.23
	020	020	035			2,020	2,020	3,460			2,280	7,500	8,850	650	2,260	2,980	3.0	10.3	13.6	3.32
	020	020	050			1,900	1,900	4,890			2,310	8,690	10,270	660	2,610	3,450	3.0	11.9	15.8	3.33
	020	020	068			1,650	1,650	5,670			2,550	8,970	10,430	680	2,680	3,530	3.1	12.3	16.2	3.35
	020	025	025			1,960	2,520	2,520			2,240	7,000	8,370	640	2,110	2,820	2.9	9.7	12.9	3.32
	020	025	035			2,000	2,570	3,430			2,280	8,000	9,320	650	2,350	3,130	3.0	10.8	14.3	3.40
	020	025	050			1,810	2,320	4,650			2,310	8,780	10,270	660	2,610	3,450	3.0	11.9	15.8	3.36
	020	025	068			1,530	1,970	5,260			2,550	8,760	10,430	680	2,680	3,530	3.1	12.3	16.2	3.27
	020	035	035			1,960	3,360	3,360			2,280	8,690	10,270	650	2,600	3,440	3.0	11.9	15.7	3.34
	020	035	050			1,690	2,900	4,340			2,510	8,930	10,430	670	2,660	3,510	3.1	12.2	16.1	3.36
	020	035	068			1,460	2,500	5,000			2,760	8,960	10,740	690	2,730	3,630	3.2	12.5	16.6	3.28
	020	050	050			1,450	3,730	3,730			2,720	8,900	10,740	680	2,720	3,630	3.1	12.4	16.6	3.27
	020	050	068			1,320	3,400	4,540			3,150	9,260	11,000	700	2,840	3,750	3.2	13.0	17.2	3.26
	020	068	068			1,250	4,280	4,280			3,240	9,800	11,000	720	2,860	3,770	3.3	13.1	17.3	3.43
	025	025	025			2,500	2,500	2,500			2,240	7,500	8,850	640	2,250	2,970	2.9	10.3	13.6	3.33
	025	025	035			2,550	2,550	3,400			2,280	8,500	9,950	650	2,500	3,340	3.0	11.4	15.3	3.40
	025	025	050			2,210	2,210	4,430			2,480	8,850	10,270	660	2,610	3,450	3.0	11.9	15.8	3.39
	025	025	068			1,900	1,900	5,070			2,550	8,870	10,740	680	2,720	3,630	3.1	12.4	16.6	3.26
	025	035	035			2,390	3,190	3,190			2,280	8,770	10,270	650	2,600	3,440	3.0	11.9	15.7	3.37
	025	035	050			2,010	2,680	4,020			2,510	8,700	10,430	670	2,660	3,510	3.1	12.2	16.1	3.27
	025	035	068			1,810	2,420	4,830			2,760	9,060	10,900	690	2,780	3,690	3.2	12.7	16.9	3.26
	025	050	050			1,800	3,600	3,600			2,720	9,000	10,900	680	2,770	3,680	3.1	12.7	16.8	3.25
	025	050	068			1,650	3,300	4,400			3,150	9,360	11,000	700	2,740	3,750	3.2	12.5	17.2	3.42
	025	068	068			1,550	4,130	4,130			3,240	9,800	11,000	720	2,860	3,770	3.3	13.1	17.3	3.43
	035	035	035			2,980	2,980	2,980			2,480	8,940	10,430	660	2,650	3,500	3.0	12.1	16.0	3.37

4. Combination Table

4-5 AJ100TXJ5KH/EA

COOLING

Unit	Indoor Unit					Cooling Capacity (W)					Capacity			Power Consumption			Current			EER
	A	B	C	D	E	A	B	C	D	E	W			W			A			W/W
											MIN	Rated	MAX	MIN	Rated	MAX	MIN	Rated	MAX	Rated
3	035	035	050			2,550	2,550	3,820			2,680	8,910	10,740	670	2,710	3,620	3.1	12.4	16.6	3.29
	035	035	068			2,320	2,320	4,630			3,110	9,260	11,000	690	2,830	3,740	3.2	13.0	17.1	3.27
	035	050	050			2,300	3,450	3,450			3,110	9,210	11,000	690	2,820	3,740	3.2	12.9	17.1	3.27
	035	050	068			2,180	3,270	4,360			3,200	9,800	11,000	710	2,800	3,760	3.2	12.8	17.2	3.50
	035	068	068			1,960	3,920	3,920			3,290	9,800	11,000	730	2,910	3,780	3.3	13.3	17.3	3.37
	050	050	050			3,270	3,270	3,270			3,150	9,800	11,000	700	2,790	3,750	3.2	12.8	17.2	3.51
	050	050	068			2,940	2,940	3,920			3,240	9,800	11,000	720	2,910	3,770	3.3	13.3	17.3	3.37
4	020	020	020	020		2,000	2,000	2,000	2,000		2,350	8,000	9,320	670	2,380	3,160	3.1	10.9	14.5	3.36
	020	020	020	025		1,980	1,980	1,980	2,550		2,350	8,500	9,950	670	2,520	3,360	3.1	11.5	15.4	3.37
	020	020	020	035		1,860	1,860	1,860	3,190		2,380	8,780	10,270	680	2,620	3,470	3.1	12.0	15.9	3.35
	020	020	020	050		1,560	1,560	1,560	4,010		2,590	8,690	10,430	690	2,690	3,540	3.2	12.3	16.2	3.23
	020	020	020	068		1,410	1,410	1,410	4,840		2,840	9,080	10,900	710	2,800	3,710	3.2	12.8	17.0	3.24
	020	020	025	025		1,900	1,900	2,450	2,450		2,350	8,700	10,270	670	2,620	3,460	3.1	12.0	15.8	3.32
	020	020	025	035		1,770	1,770	2,280	3,030		2,550	8,850	10,270	680	2,620	3,470	3.1	12.0	15.9	3.38
	020	020	025	050		1,500	1,500	1,930	3,860		2,590	8,800	10,740	690	2,730	3,640	3.2	12.5	16.7	3.22
	020	020	025	068		1,360	1,360	1,750	4,680		3,200	9,160	10,900	710	2,800	3,710	3.2	12.8	17.0	3.27
	020	020	035	035		1,600	1,600	2,750	2,750		2,550	8,700	10,430	680	2,680	3,530	3.1	12.3	16.2	3.25
	020	020	035	050		1,430	1,430	2,450	3,680		2,800	9,000	10,900	700	2,790	3,700	3.2	12.8	16.9	3.23
	020	020	035	068		1,310	1,310	2,250	4,490		3,240	9,360	11,000	720	2,760	3,770	3.3	12.6	17.3	3.39
	020	020	050	050		1,300	1,300	3,350	3,350		3,200	9,300	11,000	710	2,850	3,760	3.2	13.0	17.2	3.26
	020	020	050	068		1,230	1,230	3,150	4,200		3,290	9,800	11,000	730	2,870	3,780	3.3	13.1	17.3	3.41
	020	025	025	025		1,810	2,320	2,320	2,320		2,350	8,780	10,270	670	2,620	3,460	3.1	12.0	15.8	3.35
	020	025	025	035		1,690	2,170	2,170	2,900		2,550	8,940	10,430	680	2,670	3,520	3.1	12.2	16.1	3.35
	020	025	025	050		1,450	1,860	1,860	3,720		2,760	8,880	10,740	690	2,730	3,640	3.2	12.5	16.7	3.25
	020	025	025	068		1,320	1,700	1,700	4,540		3,200	9,260	11,000	710	2,850	3,760	3.2	13.0	17.2	3.25
	020	025	035	035		1,540	1,980	2,640	2,640		2,550	8,800	10,740	680	2,720	3,630	3.1	12.4	16.6	3.24
	020	025	035	050		1,380	1,780	2,370	3,560		3,150	9,100	10,900	700	2,790	3,700	3.2	12.8	16.9	3.26
	020	025	035	068		1,270	1,640	2,190	4,370		3,240	9,470	11,000	720	2,810	3,770	3.3	12.9	17.3	3.37
	020	025	050	050		1,270	1,630	3,250	3,250		3,200	9,400	11,000	710	2,800	3,760	3.2	12.8	17.2	3.36
	020	025	050	068		1,180	1,520	3,040	4,060		3,290	9,800	11,000	730	2,870	3,780	3.3	13.1	17.3	3.41
	020	035	035	035		1,470	2,510	2,510	2,510		2,760	9,000	10,900	690	2,780	3,690	3.2	12.7	16.9	3.24
	020	035	035	050		1,330	2,280	2,280	3,420		3,150	9,320	11,000	700	2,840	3,750	3.2	13.0	17.2	3.28
	020	035	035	068		1,250	2,140	2,140	4,280		3,240	9,800	11,000	720	2,860	3,770	3.3	13.1	17.3	3.43
	020	035	050	050		1,250	2,140	3,210	3,210		3,240	9,800	11,000	720	2,850	3,770	3.3	13.0	17.3	3.44
	020	035	050	068		1,120	1,930	2,890	3,860		3,330	9,800	11,000	740	2,920	3,790	3.4	13.4	17.3	3.36
	020	050	050	050		1,120	2,890	2,890	2,890		3,290	9,800	11,000	730	2,920	3,780	3.3	13.4	17.3	3.36
	025	025	025	025		2,210	2,210	2,210	2,210		2,510	8,840	10,270	670	2,620	3,460	3.1	12.0	15.8	3.37
	025	025	025	035		2,010	2,010	2,010	2,680		2,550	8,710	10,430	680	2,670	3,520	3.1	12.2	16.1	3.26
	025	025	025	050		1,800	1,800	1,800	3,600		2,760	9,000	10,900	690	2,780	3,690	3.2	12.7	16.9	3.24
	025	025	025	068		1,660	1,660	1,660	4,410		3,200	9,380	11,000	710	2,750	3,760	3.2	12.6	17.2	3.41
	025	025	035	035		1,910	1,910	2,540	2,540		2,720	8,900	10,740	680	2,720	3,630	3.1	12.4	16.6	3.27
	025	025	035	050		1,730	1,730	2,300	3,450		3,150	9,200	11,000	700	2,830	3,750	3.2	13.0	17.2	3.25
	025	025	035	068		1,630	1,630	2,180	4,360		3,240	9,800	11,000	720	2,810	3,770	3.3	12.9	17.3	3.49
	025	025	050	050		1,630	1,630	3,270	3,270		3,200	9,800	11,000	710	2,800	3,760	3.2	12.8	17.2	3.50

4. Combination Table

4-5 AJ100TXJ5KH/EA

COOLING

Unit	Indoor Unit					Cooling Capacity (W)					Capacity			Power Consumption			Current			EER
	A	B	C	D	E	A	B	C	D	E	W			W			A			W/W
											MIN	Rated	MAX	MIN	Rated	MAX	MIN	Rated	MAX	Rated
4	025	025	050	068		1,470	1,470	2,940	3,920		3,290	9,800	11,000	730	2,920	3,780	3.3	13.4	17.3	3.36
	025	035	035	035		1,820	2,430	2,430	2,430		3,110	9,100	10,900	690	2,780	3,690	3.2	12.7	16.9	3.27
	025	035	035	050		1,660	2,210	2,210	3,320		3,150	9,400	11,000	700	2,790	3,750	3.2	12.8	17.2	3.37
	025	035	035	068		1,550	2,060	2,060	4,130		3,240	9,800	11,000	720	2,860	3,770	3.3	13.1	17.3	3.43
	025	035	050	050		1,550	2,060	3,090	3,090		3,240	9,800	11,000	720	2,850	3,770	3.3	13.0	17.3	3.44
	035	035	035	035		2,330	2,330	2,330	2,330		3,110	9,320	11,000	690	2,830	3,740	3.2	13.0	17.1	3.29
	035	035	035	050		2,180	2,180	2,180	3,270		3,200	9,800	11,000	710	2,840	3,760	3.2	13.0	17.2	3.45
	035	035	035	068		1,960	1,960	1,960	3,920		3,290	9,800	11,000	730	2,910	3,780	3.3	13.3	17.3	3.37
	035	035	050	050		1,960	1,960	2,940	2,940		3,240	9,800	11,000	720	2,910	3,770	3.3	13.3	17.3	3.37
5	020	020	020	020	020	1,900	1,900	1,900	1,900	1,900	2,630	9,500	10,270	700	2,650	3,490	3.2	12.1	16.0	3.58
	020	020	020	020	025	1,810	1,810	1,810	1,810	2,320	2,630	9,550	10,430	700	2,700	3,550	3.2	12.4	16.2	3.54
	020	020	020	020	035	1,690	1,690	1,690	1,690	2,900	2,660	9,660	10,740	710	2,750	3,650	3.2	12.6	16.7	3.51
	020	020	020	020	050	1,520	1,520	1,520	1,520	3,910	3,240	10,000	10,900	720	2,810	3,720	3.3	12.9	17.0	3.56
	020	020	020	020	068	1,350	1,350	1,350	1,350	4,620	3,330	10,000	11,000	740	2,830	3,790	3.4	13.0	17.3	3.53
	020	020	020	025	025	1,720	1,720	1,720	2,220	2,220	2,630	9,610	10,430	700	2,700	3,550	3.2	12.4	16.2	3.56
	020	020	020	025	035	1,620	1,620	1,620	2,080	2,770	2,840	9,710	10,740	710	2,750	3,650	3.2	12.6	16.7	3.53
	020	020	020	025	050	1,460	1,460	1,460	1,880	3,750	3,240	10,000	11,000	720	2,860	3,770	3.3	13.1	17.3	3.50
	020	020	020	025	068	1,300	1,300	1,300	1,670	4,440	3,330	10,000	11,000	740	2,830	3,790	3.4	13.0	17.3	3.53
	020	020	020	035	035	1,560	1,560	1,560	2,670	2,670	3,200	10,000	10,900	710	2,800	3,710	3.2	12.8	17.0	3.57
	020	020	020	035	050	1,370	1,370	1,370	2,350	3,530	3,290	10,000	11,000	730	2,820	3,780	3.3	12.9	17.3	3.55
	020	020	020	035	068	1,230	1,230	1,230	2,110	4,210	3,380	10,000	11,000	750	2,880	3,800	3.4	13.2	17.4	3.47
	020	020	020	050	050	1,230	1,230	1,230	3,160	3,160	3,330	10,000	11,000	740	2,880	3,790	3.4	13.2	17.3	3.47
	020	020	025	025	025	1,650	1,650	2,120	2,120	2,120	2,630	9,660	10,740	700	2,740	3,650	3.2	12.5	16.7	3.53
	020	020	025	025	035	1,590	1,590	2,050	2,050	2,730	2,840	10,000	10,900	710	2,800	3,710	3.2	12.8	17.0	3.57
	020	020	025	025	050	1,400	1,400	1,800	1,800	3,600	3,240	10,000	11,000	720	2,860	3,770	3.3	13.1	17.3	3.50
	020	020	025	025	068	1,250	1,250	1,610	1,610	4,290	3,330	10,000	11,000	740	2,880	3,790	3.4	13.2	17.3	3.47
	020	020	025	035	035	1,490	1,490	1,910	2,550	2,550	3,200	10,000	11,000	710	2,850	3,760	3.2	13.0	17.2	3.51
	020	020	025	035	050	1,320	1,320	1,700	2,260	3,400	3,290	10,000	11,000	730	2,820	3,780	3.3	12.9	17.3	3.55
	020	020	025	035	068	1,190	1,190	1,530	2,030	4,070	3,380	10,000	11,000	750	2,930	3,800	3.4	13.4	17.4	3.41
	020	020	025	050	050	1,190	1,190	1,530	3,050	3,050	3,330	10,000	11,000	740	2,930	3,790	3.4	13.4	17.3	3.41
	020	020	035	035	035	1,400	1,400	2,400	2,400	2,400	3,240	10,000	11,000	720	2,810	3,770	3.3	12.9	17.3	3.56
	020	020	035	035	050	1,250	1,250	2,140	2,140	3,210	3,290	10,000	11,000	730	2,870	3,780	3.3	13.1	17.3	3.48
	020	025	025	025	025	1,580	2,030	2,030	2,030	2,030	2,800	9,700	10,740	700	2,740	3,650	3.2	12.5	16.7	3.54
	020	025	025	025	035	1,520	1,960	1,960	1,960	2,610	3,200	10,000	10,900	710	2,800	3,710	3.2	12.8	17.0	3.57
	020	025	025	025	050	1,350	1,730	1,730	1,730	3,460	3,240	10,000	11,000	720	2,810	3,770	3.3	12.9	17.3	3.56
	020	025	025	025	068	1,210	1,550	1,550	1,550	4,140	3,330	10,000	11,000	740	2,880	3,790	3.4	13.2	17.3	3.47
	020	025	025	035	035	1,430	1,840	1,840	2,450	2,450	3,200	10,000	11,000	710	2,850	3,760	3.2	13.0	17.2	3.51
	020	025	025	035	050	1,270	1,640	1,640	2,180	3,270	3,290	10,000	11,000	730	2,860	3,780	3.3	13.1	17.3	3.50
	020	025	025	035	068	1,150	1,480	1,480	1,970	3,930	3,380	10,000	11,000	750	2,930	3,800	3.4	13.4	17.4	3.41

4. Combination Table

4-5 AJ100TXJ5KH/EA

COOLING

Unit	Indoor Unit					Cooling Capacity (W)					Capacity			Power Consumption			Current			EER
	A	B	C	D	E	A	B	C	D	E	W			W			A			W/W
											MIN	Rated	MAX	MIN	Rated	MAX	MIN	Rated	MAX	Rated
5	020	025	025	050	050	1,150	1,480	1,480	2,950	2,950	3,330	10,000	11,000	740	2,930	3,790	3.4	13.4	17.3	3.41
	020	025	035	035	035	1,350	1,730	2,310	2,310	2,310	3,240	10,000	11,000	720	2,810	3,770	3.3	12.9	17.3	3.56
	020	025	035	035	050	1,210	1,550	2,070	2,070	3,100	3,290	10,000	11,000	730	2,920	3,780	3.3	13.4	17.3	3.42
	020	035	035	035	035	1,270	2,180	2,180	2,180	2,180	3,240	10,000	11,000	720	2,860	3,770	3.3	13.1	17.3	3.50
	025	025	025	025	025	2,000	2,000	2,000	2,000	2,000	3,000	10,000	11,000	700	2,900	3,700	3.2	13.3	16.9	3.45
	025	025	025	025	035	1,880	1,880	1,880	1,880	2,500	3,200	10,000	11,000	710	2,840	3,760	3.2	13.0	17.2	3.52
	025	025	025	025	050	1,670	1,670	1,670	1,670	3,330	3,240	10,000	11,000	720	2,810	3,770	3.3	12.9	17.3	3.56
	025	025	025	025	068	1,500	1,500	1,500	1,500	4,000	3,330	10,000	11,000	740	2,930	3,790	3.4	13.4	17.3	3.41
	025	025	025	035	035	1,760	1,760	1,760	2,350	2,350	3,200	10,000	11,000	710	2,800	3,760	3.2	12.8	17.2	3.57
	025	025	025	035	050	1,580	1,580	1,580	2,110	3,160	3,290	10,000	11,000	730	2,860	3,780	3.3	13.1	17.3	3.50
	025	025	035	035	035	1,670	1,670	2,220	2,220	2,220	3,240	10,000	11,000	720	2,850	3,770	3.3	13.0	17.3	3.51
	025	025	035	035	050	1,500	1,500	2,000	2,000	3,000	3,290	10,000	11,000	730	2,920	3,780	3.3	13.4	17.3	3.42
	025	035	035	035	035	1,580	2,110	2,110	2,110	2,110	3,240	10,000	11,000	720	2,910	3,770	3.3	13.3	17.3	3.44

HEATING

Unit	Indoor Unit					Heating Capacity (W)					Capacity			Power Consumption			Current			EER
	A	B	C	D	E	A	B	C	D	E	W			W			A			W/W
											MIN	Rated	MAX	MIN	Rated	MAX	MIN	Rated	MAX	Rated
1	020					2,200					1,160	2,200	2,500	430	1,690	1,840	2.0	7.7	8.4	1.30
	025					3,200					1,160	3,200	3,500	430	1,880	2,030	2.0	8.6	9.3	1.70
	035					4,000					1,190	4,000	4,400	440	2,180	2,360	2.0	10.0	10.8	1.83
	050					6,000					1,220	6,000	6,400	450	2,820	3,060	2.1	12.9	14.0	2.13
	068					8,000					1,270	8,000	8,400	470	3,250	3,520	2.2	14.9	16.1	2.46
2	020	020				2,200	2,200				1,240	4,400	5,530	460	1,250	1,520	2.1	5.7	7.0	3.52
	020	025				2,410	3,090				1,240	5,500	6,790	460	1,520	1,850	2.1	7.0	8.5	3.62
	020	035				2,280	3,920				1,270	6,200	7,580	470	1,700	2,060	2.2	7.8	9.4	3.65
	020	050				2,300	5,900				1,300	8,200	10,110	480	2,240	2,750	2.2	10.3	12.6	3.66
	020	068				2,260	7,740				1,500	10,000	12,480	500	2,790	3,390	2.3	12.8	15.5	3.58
	025	025				3,300	3,300				1,240	6,600	8,220	460	1,820	2,230	2.1	8.3	10.2	3.63
	025	035				3,130	4,170				1,270	7,300	9,010	470	2,010	2,440	2.2	9.2	11.2	3.63
	025	050				3,100	6,200				1,300	9,300	11,690	480	2,590	3,160	2.2	11.9	14.5	3.59
	025	068				2,890	7,710				1,500	10,600	13,110	500	2,920	3,560	2.3	13.4	16.3	3.63
	035	035				4,000	4,000				1,270	8,000	9,800	470	2,190	2,650	2.2	10.0	12.1	3.65
	035	050				4,000	6,000				1,470	10,000	12,320	490	2,730	3,330	2.2	12.5	15.2	3.66
	035	068				3,530	7,070				1,530	10,600	13,110	510	2,930	3,560	2.3	13.4	16.3	3.62
	050	050				5,300	5,300				1,650	10,600	13,110	500	2,920	3,560	2.3	13.4	16.3	3.63
	050	068				4,540	6,060				1,820	10,600	13,110	520	2,940	3,580	2.4	13.5	16.4	3.61
	068	068				5,300	5,300				2,160	10,600	12,960	540	2,920	3,560	2.5	13.4	16.3	3.63

4. Combination Table

4-5 AJ100TXJ5KH/EA

HEATING

Unit	Indoor Unit					Heating Capacity (W)					Capacity			Power Consumption			Current			EER
	A	B	C	D	E	A	B	C	D	E	W			W			A			W/W
											MIN	Rated	MAX	MIN	Rated	MAX	MIN	Rated	MAX	Rated
3	020	020	020			2,200	2,200	2,200			1,320	6,600	7,580	490	1,720	2,090	2.2	7.9	9.6	3.84
	020	020	025			2,340	2,340	3,010			1,320	7,700	9,010	490	2,030	2,460	2.2	9.3	11.3	3.79
	020	020	035			2,260	2,260	3,880			1,350	8,400	9,800	500	2,210	2,680	2.3	10.1	12.3	3.80
	020	020	050			2,120	2,120	5,450			1,530	9,690	12,170	510	2,710	3,320	2.3	12.4	15.2	3.58
	020	020	068			1,820	1,820	6,230			1,750	9,860	12,170	530	2,730	3,340	2.4	12.5	15.3	3.61
	020	025	025			2,460	3,170	3,170			1,320	8,800	10,740	490	2,380	2,920	2.2	10.9	13.4	3.70
	020	025	035			2,380	3,050	4,070			1,350	9,500	11,380	500	2,520	3,090	2.3	11.5	14.1	3.77
	020	025	050			2,020	2,590	5,180			1,530	9,790	11,850	510	2,670	3,230	2.3	12.2	14.8	3.67
	020	025	068			1,740	2,240	5,980			1,860	9,970	12,170	530	2,730	3,340	2.4	12.5	15.3	3.65
	020	035	035			2,180	3,740	3,740			1,500	9,670	12,170	500	2,700	3,310	2.3	12.4	15.1	3.58
	020	035	050			1,870	3,200	4,800			1,720	9,860	12,170	520	2,720	3,320	2.4	12.4	15.2	3.63
	020	035	068			1,630	2,800	5,600			1,890	10,040	12,320	540	2,780	3,380	2.5	12.7	15.5	3.61
	020	050	050			1,640	4,210	4,210			1,860	10,060	12,320	530	2,780	3,380	2.4	12.7	15.5	3.62
	020	050	068			1,540	3,970	5,290			2,200	10,810	12,800	550	2,880	3,520	2.5	13.2	16.1	3.75
	020	068	068			1,400	4,800	4,800			2,280	11,000	12,960	570	2,950	3,590	2.6	13.5	16.4	3.73
	025	025	025			3,210	3,210	3,210			1,470	9,630	11,850	490	2,650	3,210	2.2	12.1	14.7	3.63
	025	025	035			2,910	2,910	3,880			1,500	9,700	11,530	500	2,560	3,140	2.3	11.7	14.4	3.79
	025	025	050			2,470	2,470	4,950			1,680	9,890	12,320	510	2,760	3,360	2.3	12.6	15.4	3.58
	025	025	068			2,280	2,280	6,090			1,860	10,650	12,480	530	2,820	3,420	2.4	12.9	15.7	3.78
	025	035	035			2,660	3,550	3,550			1,500	9,770	11,850	500	2,660	3,220	2.3	12.2	14.7	3.67
	025	035	050			2,300	3,070	4,600			1,820	9,970	12,170	520	2,720	3,320	2.4	12.4	15.2	3.67
	025	035	068			2,140	2,860	5,720			1,890	10,720	12,480	540	2,830	3,430	2.5	13.0	15.7	3.79
	025	050	050			2,150	4,300	4,300			1,860	10,740	12,480	530	2,820	3,420	2.4	12.9	15.7	3.81
	025	050	068			1,940	3,880	5,180			2,200	11,000	12,960	550	2,930	3,570	2.5	13.4	16.3	3.75
	025	068	068			1,740	4,630	4,630			2,280	11,000	13,110	570	2,990	3,630	2.6	13.7	16.6	3.68
	035	035	035			3,280	3,280	3,280			1,680	9,840	12,170	510	2,710	3,310	2.3	12.4	15.1	3.63
	035	035	050			2,870	2,870	4,300			1,820	10,040	12,320	520	2,770	3,370	2.4	12.7	15.4	3.62
	035	035	068			2,700	2,700	5,400			2,160	10,790	12,800	540	2,870	3,510	2.5	13.1	16.1	3.76
	035	050	050			2,700	4,050	4,050			2,160	10,800	12,800	540	2,870	3,510	2.5	13.1	16.1	3.76
	035	050	068			2,440	3,670	4,890			2,240	11,000	12,960	560	2,930	3,570	2.6	13.4	16.3	3.75
	035	068	068			2,200	4,400	4,400			2,320	11,000	13,430	580	3,040	3,720	2.7	13.9	17.0	3.62
	050	050	050			3,670	3,670	3,670			2,200	11,000	12,960	550	2,930	3,570	2.5	13.4	16.3	3.75
	050	050	068			3,300	3,300	4,400			2,280	11,000	13,430	570	3,040	3,710	2.6	13.9	17.0	3.62
4	020	020	020	020		2,200	2,200	2,200	2,200		1,400	8,800	9,800	520	2,240	2,700	2.4	10.3	12.4	3.93
	020	020	020	025		2,250	2,250	2,250	2,890		1,560	9,630	11,380	520	2,550	3,120	2.4	11.7	14.3	3.78
	020	020	020	035		2,060	2,060	2,060	3,520		1,590	9,690	12,170	530	2,730	3,330	2.4	12.5	15.2	3.55
	020	020	020	050		1,780	1,780	1,780	4,570		1,780	9,900	12,170	540	2,740	3,350	2.5	12.5	15.3	3.61
	020	020	020	068		1,660	1,660	1,660	5,690		1,960	10,660	12,320	560	2,810	3,410	2.6	12.9	15.6	3.79
	020	020	025	025		2,130	2,130	2,740	2,740		1,560	9,740	11,530	520	2,590	3,160	2.4	11.9	14.5	3.76
	020	020	025	035		1,960	1,960	2,520	3,360		1,590	9,790	11,850	530	2,680	3,250	2.4	12.3	14.9	3.65
	020	020	025	050		1,710	1,710	2,200	4,390		1,890	10,010	12,170	540	2,740	3,350	2.5	12.5	15.3	3.65
	020	020	025	068		1,600	1,600	2,060	5,490		1,960	10,760	12,480	560	2,850	3,450	2.6	13.0	15.8	3.78
	020	020	035	035		1,820	1,820	3,120	3,120		1,750	9,880	12,170	530	2,730	3,340	2.4	12.5	15.3	3.62
	020	020	035	050		1,700	1,700	2,910	4,360		1,930	10,660	12,320	550	2,790	3,390	2.5	12.8	15.5	3.82
	020	020	035	068		1,510	1,510	2,600	5,190		2,280	10,820	12,800	570	2,900	3,540	2.6	13.3	16.2	3.73
	020	020	050	050		1,520	1,520	3,910	3,910		2,240	10,860	12,800	560	2,890	3,530	2.6	13.2	16.2	3.76

4. Combination Table

4-5 AJ100TXJ5KH/EA

HEATING

Unit	Indoor Unit					Heating Capacity (W)					Capacity			Power Consumption			Current			EER
	A	B	C	D	E	A	B	C	D	E	W			W			A			W/W
											MIN	Rated	MAX	MIN	Rated	MAX	MIN	Rated	MAX	Rated
4	020	020	050	068		1,380	1,380	3,540	4,710		2,320	11,000	12,960	580	2,960	3,600	2.7	13.5	16.5	3.72
	020	025	025	025		2,030	2,610	2,610	2,610		1,720	9,860	12,170	520	2,720	3,330	2.4	12.4	15.2	3.63
	020	025	025	035		1,880	2,420	2,420	3,220		1,750	9,930	12,320	530	2,770	3,370	2.4	12.7	15.4	3.58
	020	025	025	050		1,740	2,240	2,240	4,470		1,890	10,680	12,480	540	2,830	3,430	2.5	13.0	15.7	3.77
	020	025	025	068		1,550	1,990	1,990	5,320		2,240	10,860	12,960	560	2,940	3,580	2.6	13.5	16.4	3.69
	020	025	035	035		1,750	2,250	3,000	3,000		1,860	9,990	12,170	530	2,730	3,340	2.4	12.5	15.3	3.66
	020	025	035	050		1,640	2,110	2,810	4,210		1,930	10,770	12,480	550	2,840	3,440	2.5	13.0	15.7	3.79
	020	025	035	068		1,480	1,900	2,540	5,080		2,280	11,000	12,960	570	2,940	3,580	2.6	13.5	16.4	3.74
	020	025	050	050		1,480	1,900	3,810	3,810		2,240	11,000	12,960	560	2,940	3,580	2.6	13.5	16.4	3.74
	020	025	050	068		1,330	1,710	3,410	4,550		2,320	11,000	13,110	580	3,000	3,640	2.7	13.7	16.7	3.67
	020	035	035	035		1,640	2,800	2,800	2,800		1,890	10,050	12,320	540	2,780	3,380	2.5	12.7	15.5	3.62
	020	035	035	050		1,550	2,650	2,650	3,970		2,200	10,820	12,800	550	2,880	3,520	2.5	13.2	16.1	3.76
	020	035	035	068		1,400	2,400	2,400	4,800		2,280	11,000	12,960	570	2,950	3,590	2.6	13.5	16.4	3.73
	020	035	050	050		1,400	2,400	3,600	3,600		2,280	11,000	12,960	570	2,940	3,580	2.6	13.5	16.4	3.74
	020	035	050	068		1,260	2,160	3,250	4,330		2,360	11,000	13,430	590	3,050	3,730	2.7	14.0	17.1	3.61
	020	050	050	050		1,260	3,250	3,250	3,250		2,320	11,000	13,430	580	3,050	3,720	2.7	14.0	17.0	3.61
	025	025	025	025		2,490	2,490	2,490	2,490		1,820	9,960	12,480	520	2,810	3,410	2.4	12.9	15.6	3.54
	025	025	025	035		2,310	2,310	2,310	3,080		1,860	10,020	12,320	530	2,770	3,370	2.4	12.7	15.4	3.62
	025	025	025	050		2,160	2,160	2,160	4,320		2,160	10,800	12,800	540	2,870	3,510	2.5	13.1	16.1	3.76
	025	025	025	068		1,940	1,940	1,940	5,180		2,240	11,000	12,960	560	2,940	3,580	2.6	13.5	16.4	3.74
	025	025	035	035		2,280	2,280	3,050	3,050		1,860	10,660	12,480	530	2,820	3,420	2.4	12.9	15.7	3.78
	025	025	035	050		2,040	2,040	2,720	4,080		2,200	10,870	12,960	550	2,920	3,560	2.5	13.4	16.3	3.72
	025	025	035	068		1,830	1,830	2,440	4,890		2,280	11,000	13,110	570	2,990	3,620	2.6	13.7	16.6	3.68
	025	025	050	050		1,830	1,830	3,670	3,670		2,240	11,000	13,110	560	2,980	3,620	2.6	13.6	16.6	3.69
	025	025	050	068		1,650	1,650	3,300	4,400		2,320	11,000	13,590	580	3,090	3,760	2.7	14.1	17.2	3.56
	025	035	035	035		2,150	2,870	2,870	2,870		1,890	10,750	12,480	540	2,830	3,430	2.5	13.0	15.7	3.80
	025	035	035	050		1,940	2,590	2,590	3,880		2,200	11,000	12,960	550	2,930	3,570	2.5	13.4	16.3	3.75
	025	035	035	068		1,740	2,320	2,320	4,630		2,280	11,000	13,110	570	2,990	3,630	2.6	13.7	16.6	3.68
	025	035	050	050		1,740	2,320	3,470	3,470		2,280	11,000	13,110	570	2,990	3,620	2.6	13.7	16.6	3.68
	035	035	035	035		2,700	2,700	2,700	2,700		2,160	10,800	12,800	540	2,870	3,510	2.5	13.1	16.1	3.76
	035	035	035	050		2,440	2,440	2,440	3,670		2,240	11,000	12,960	560	2,930	3,570	2.6	13.4	16.3	3.75
	035	035	035	068		2,200	2,200	2,200	4,400		2,320	11,000	13,430	580	3,040	3,720	2.7	13.9	17.0	3.62
	035	035	050	050		2,200	2,200	3,300	3,300		2,280	11,000	13,430	570	3,040	3,710	2.6	13.9	17.0	3.62
5	020	020	020	020	020	2,200	2,200	2,200	2,200	2,200	1,650	11,000	13,110	550	2,970	3,610	2.5	13.6	16.5	3.70
	020	020	020	020	025	2,160	2,160	2,160	2,160	2,780	1,820	11,440	12,960	550	2,930	3,570	2.5	13.4	16.3	3.90
	020	020	020	020	035	2,030	2,030	2,030	2,030	3,470	1,850	11,580	13,110	560	2,980	3,610	2.6	13.6	16.5	3.89
	020	020	020	020	050	1,750	1,750	1,750	1,750	4,500	2,000	11,500	13,430	570	3,040	3,710	2.6	13.9	17.0	3.78
	020	020	020	020	068	1,610	1,610	1,610	1,610	5,510	2,360	11,930	13,750	590	3,140	3,810	2.7	14.4	17.4	3.80
	020	020	020	025	025	2,100	2,100	2,100	2,700	2,700	1,930	11,710	13,430	550	3,020	3,690	2.5	13.8	16.9	3.88
	020	020	020	025	035	1,980	1,980	1,980	2,550	3,390	1,960	11,880	13,110	560	2,980	3,610	2.6	13.6	16.5	3.99
	020	020	020	025	050	1,720	1,720	1,720	2,210	4,420	2,280	11,780	13,590	570	3,080	3,750	2.6	14.1	17.2	3.82
	020	020	020	025	068	1,560	1,560	1,560	2,000	5,330	2,360	12,000	13,900	590	3,190	3,860	2.7	14.6	17.7	3.76
	020	020	020	035	035	1,780	1,780	1,780	3,060	3,060	1,960	11,470	13,430	560	3,030	3,700	2.6	13.9	16.9	3.79
	020	020	020	035	050	1,640	1,640	1,640	2,810	4,210	2,320	11,940	13,750	580	3,130	3,800	2.7	14.3	17.4	3.81

4. Combination Table

4-5 AJ100TXJ5KH/EA

HEATING

Unit	Indoor Unit					Heating Capacity (W)					Capacity			Power Consumption			Current			EER
	A	B	C	D	E	A	B	C	D	E	W			W			A			W/W
											MIN	Rated	MAX	MIN	Rated	MAX	MIN	Rated	MAX	Rated
5	020	020	020	035	068	1,470	1,470	1,470	2,530	5,050	2,400	12,000	14,000	600	3,240	3,940	2.7	14.8	18.0	3.70
	020	020	020	050	050	1,470	1,470	1,470	3,790	3,790	2,360	12,000	14,000	590	3,230	3,940	2.7	14.8	18.0	3.72
	020	020	025	025	025	2,040	2,040	2,630	2,630	2,630	1,930	11,960	13,430	550	3,020	3,690	2.5	13.8	16.9	3.96
	020	020	025	025	035	1,840	1,840	2,360	2,360	3,150	1,960	11,540	13,590	560	3,070	3,740	2.6	14.1	17.1	3.76
	020	020	025	025	050	1,680	1,680	2,160	2,160	4,320	2,280	12,000	13,900	570	3,170	3,840	2.6	14.5	17.6	3.79
	020	020	025	025	068	1,500	1,500	1,930	1,930	5,140	2,360	12,000	14,000	590	3,280	3,940	2.7	15.0	18.0	3.66
	020	020	025	035	035	1,750	1,750	2,250	2,990	2,990	2,240	11,730	13,590	560	3,070	3,740	2.6	14.1	17.1	3.82
	020	020	025	035	050	1,580	1,580	2,040	2,720	4,080	2,320	12,000	13,900	580	3,170	3,840	2.7	14.5	17.6	3.79
	020	020	025	035	068	1,420	1,420	1,830	2,440	4,880	2,400	12,000	14,000	600	3,280	3,940	2.7	15.0	18.0	3.66
	020	020	025	050	050	1,420	1,420	1,830	3,660	3,660	2,360	12,000	14,000	590	3,280	3,940	2.7	15.0	18.0	3.66
	020	020	035	035	035	1,670	1,670	2,860	2,860	2,860	2,280	11,900	13,750	570	3,120	3,790	2.6	14.3	17.3	3.81
	020	020	035	035	050	1,500	1,500	2,570	2,570	3,860	2,320	12,000	14,000	580	3,220	3,930	2.7	14.7	18.0	3.73
	020	025	025	025	025	1,900	2,440	2,440	2,440	2,440	1,930	11,670	13,590	550	3,060	3,730	2.5	14.0	17.1	3.81
	020	025	025	025	035	1,800	2,310	2,310	2,310	3,080	2,240	11,820	13,750	560	3,110	3,780	2.6	14.2	17.3	3.80
	020	025	025	025	050	1,620	2,080	2,080	2,080	4,150	2,280	12,000	14,000	570	3,210	3,920	2.6	14.7	17.9	3.74
	020	025	025	025	068	1,450	1,860	1,860	1,860	4,970	2,360	12,000	14,000	590	3,320	3,940	2.7	15.2	18.0	3.61
	020	025	025	035	035	1,710	2,200	2,200	2,940	2,940	2,240	12,000	13,900	560	3,160	3,830	2.6	14.5	17.5	3.80
	020	025	025	035	050	1,530	1,960	1,960	2,620	3,930	2,320	12,000	14,000	580	3,260	3,920	2.7	14.9	17.9	3.68
	020	025	025	035	068	1,380	1,770	1,770	2,360	4,720	2,400	12,000	14,000	600	3,370	3,940	2.7	15.4	18.0	3.56
	020	025	025	050	050	1,380	1,770	1,770	3,540	3,540	2,360	12,000	14,000	590	3,370	3,940	2.7	15.4	18.0	3.56
	020	025	035	035	035	1,620	2,080	2,770	2,770	2,770	2,280	12,000	13,900	570	3,160	3,830	2.6	14.5	17.5	3.80
	020	025	035	035	050	1,450	1,860	2,480	2,480	3,720	2,320	12,000	14,000	580	3,270	3,930	2.7	15.0	18.0	3.67
	020	035	035	035	035	1,530	2,620	2,620	2,620	2,620	2,280	12,000	14,000	570	3,210	3,920	2.6	14.7	17.9	3.74
	025	025	025	025	025	2,400	2,400	2,400	2,400	2,400	3,400	12,000	14,000	550	2,930	3,900	2.5	13.4	17.8	4.10
	025	025	025	025	035	2,250	2,250	2,250	2,250	3,000	2,240	12,000	13,900	560	3,150	3,820	2.6	14.4	17.5	3.81
	025	025	025	025	050	2,000	2,000	2,000	2,000	4,000	2,280	12,000	14,000	570	3,260	3,920	2.6	14.9	17.9	3.68
	025	025	025	025	068	1,800	1,800	1,800	1,800	4,800	2,360	12,000	14,000	590	3,370	3,940	2.7	15.4	18.0	3.56
	025	025	025	035	035	2,120	2,120	2,120	2,820	2,820	2,240	12,000	14,000	560	3,200	3,910	2.6	14.6	17.9	3.75
	025	025	025	035	050	1,890	1,890	1,890	2,530	3,790	2,320	12,000	14,000	580	3,310	3,920	2.7	15.1	17.9	3.63
	025	025	035	035	035	2,000	2,000	2,670	2,670	2,670	2,280	12,000	14,000	570	3,250	3,910	2.6	14.9	17.9	3.69
	025	025	035	035	050	1,800	1,800	2,400	2,400	3,600	3,400	12,000	14,000	580	3,360	3,930	2.7	15.4	18.0	3.57
	025	035	035	035	035	1,890	2,530	2,530	2,530	2,530	2,280	12,000	14,000	570	3,260	3,920	2.6	14.9	17.9	3.68

NOTE

1 Cooling capacity is based on 27°CDB / 19°CWB (indoor temperature), 35°CDB (outdoor temperature).

2 Heating capacity is based on 20°CDB (indoor temperature), 7°CDB/6°CWB (outdoor temperature).

3 The above is the value for connecting with the following indoor units.
- AJ***TNAPKH : Premium Wind Free

4 You can not connect a single unit.

5 Power consumption include indoor unit power.

4. Combination Table

4-6 AJ125TXJ5KH/EA

COOLING

Unit	Indoor Unit					Cooling Capacity (W)					Capacity			Power Consumption			Current			EER
	A	B	C	D	E	A	B	C	D	E	W			W			A			W/W
											MIN	Rated	MAX	MIN	Rated	MAX	MIN	Rated	MAX	Rated
1	020					2,000					2,490	2,000	2,600	660	730	790	3.0	3.3	3.6	2.74
	025					2,500					2,490	2,500	3,200	660	890	970	3.0	4.1	4.4	2.81
	035					3,500					2,490	3,500	3,800	660	1,160	1,250	3.0	5.3	5.7	3.02
	050					5,000					2,780	5,000	6,100	680	1,670	1,810	3.1	7.6	8.3	2.99
	068					6,200					2,780	6,200	7,600	680	2,120	2,300	3.1	9.7	10.5	2.92
2	020	020				2,050	2,050				2,640	4,100	4,310	650	1,140	1,250	3.0	5.2	5.7	3.60
	020	025				2,050	2,640				2,640	4,690	4,920	651	1,250	1,380	3.0	5.7	6.3	3.75
	020	035				2,050	3,520				2,640	5,570	5,850	652	1,460	1,610	3.0	6.7	7.4	3.82
	020	050				1,980	5,080				2,640	7,060	7,420	654	1,800	1,980	3.0	8.2	9.1	3.92
	020	068				1,920	6,580				2,640	8,500	8,920	655	2,720	2,990	3.0	12.4	13.7	3.13
	025	025				2,640	2,640				2,640	5,280	5,540	656	1,350	1,490	3.0	6.2	6.8	3.91
	025	035				2,640	3,510				2,640	6,150	6,460	657	1,560	1,720	3.0	7.1	7.9	3.94
	025	050				2,550	5,100				2,640	7,650	8,030	659	2,260	2,490	3.0	10.3	11.4	3.38
	025	068				2,480	6,610				2,640	9,090	9,540	660	2,880	3,170	3.0	13.2	14.5	3.16
	035	035				3,520	3,520				2,640	7,030	7,390	661	1,770	1,950	3.0	8.1	8.9	3.97
	035	050				3,410	5,120				2,640	8,530	8,960	663	2,560	2,820	3.0	11.7	12.9	3.33
	035	068				3,320	6,640				2,640	9,960	10,460	664	3,420	3,760	3.0	15.7	17.2	2.91
	050	050				5,010	5,010				2,640	10,020	10,520	668	3,100	3,410	3.1	14.2	15.6	3.23
	050	068				4,910	6,550				2,640	11,460	12,030	669	3,520	3,870	3.1	16.1	17.7	3.26
	068	068				5,800	5,800				2,640	11,600	13,100	670	3,870	4,670	3.1	17.7	21.4	3.00
3	020	020	020			2,050	2,050	2,050			2,780	6,150	6,460	600	1,860	2,050	2.7	8.5	9.4	3.31
	020	020	025			2,050	2,050	2,640			2,780	6,740	7,080	600	2,000	2,200	2.7	9.2	10.1	3.37
	020	020	035			2,050	2,050	3,520			2,780	7,620	8,000	600	2,220	2,440	2.7	10.2	11.2	3.43
	020	020	050			2,050	2,050	5,280			2,780	9,380	9,850	600	2,750	3,030	2.7	12.6	13.9	3.41
	020	020	068			2,050	2,050	7,040			2,780	11,140	11,690	600	3,660	4,590	2.7	16.8	21.0	3.04
	020	025	025			2,050	2,640	2,640			2,780	7,330	7,690	600	2,120	2,330	2.7	9.7	10.7	3.46
	020	025	035			2,050	2,640	3,520			2,780	8,210	8,620	600	2,370	2,610	2.7	10.8	11.9	3.46
	020	025	050			2,050	2,640	5,270			2,780	9,960	10,460	600	2,890	3,180	2.7	13.2	14.6	3.45
	020	025	068			2,030	2,610	6,960			2,780	11,600	12,310	600	3,740	4,610	2.7	17.1	21.1	3.10
	020	035	035			2,050	3,520	3,520			2,780	9,090	9,540	600	2,730	3,000	2.7	12.5	13.7	3.33
	020	035	050			2,050	3,520	5,270			2,780	10,840	11,390	600	3,390	3,730	2.7	15.5	17.1	3.20
	020	035	068			1,890	3,240	6,470			2,780	11,600	13,100	600	3,870	4,670	2.7	17.7	21.4	3.00
	020	050	050			1,890	4,860	4,860			2,780	11,600	13,100	600	3,870	4,670	2.7	17.7	21.4	3.00
	020	050	068			1,660	4,260	5,680			2,780	11,600	13,100	600	3,870	4,670	2.7	17.7	21.4	3.00
	020	068	068			1,540	5,280	5,280			2,780	12,100	13,700	600	3,910	4,710	2.7	17.9	21.6	3.09
	025	025	025			2,640	2,640	2,640			2,780	7,910	8,310	600	2,220	2,440	2.7	10.2	11.2	3.56
	025	025	035			2,640	2,640	3,520			2,780	8,790	9,230	600	2,520	2,770	2.7	11.5	12.7	3.49
	025	025	050			2,640	2,640	5,280			2,780	10,550	11,080	600	3,050	3,360	2.7	14.0	15.4	3.46
	025	025	068			2,490	2,490	6,630			2,780	11,600	12,920	600	3,780	4,640	2.7	17.3	21.2	3.07
	025	035	035			2,640	3,520	3,520			2,780	9,670	10,160	600	2,870	3,160	2.7	13.1	14.5	3.37
	025	035	050			2,640	3,520	5,280			2,780	11,430	12,000	600	3,700	4,590	2.7	16.9	21.0	3.09
	025	035	068			2,320	3,090	6,190			2,780	11,600	13,100	600	3,870	4,670	2.7	17.7	21.4	3.00
	025	050	050			2,320	4,640	4,640			2,780	11,600	13,100	600	3,870	4,670	2.7	17.7	21.4	3.00
	025	050	068			2,140	4,270	5,690			2,780	12,100	13,700	600	3,910	4,710	2.7	17.9	21.6	3.09
	025	068	068			1,910	5,090	5,090			2,780	12,100	13,700	600	3,910	4,710	2.7	17.9	21.6	3.09
	035	035	035			3,520	3,520	3,520			2,780	10,550	11,080	600	3,370	3,710	2.7	15.4	17.0	3.13

4. Combination Table

4-6 AJ125TXJ5KH/EA

COOLING

Unit	Indoor Unit					Cooling Capacity (W)					Capacity			Power Consumption			Current			EER
	A	B	C	D	E	A	B	C	D	E	W			W			A			W/W
											MIN	Rated	MAX	MIN	Rated	MAX	MIN	Rated	MAX	Rated
3	035	035	050			3,310	3,310	4,970			2,780	11,600	12,920	600	3,820	4,640	2.7	17.5	21.2	3.04
	035	035	068			2,900	2,900	5,800			2,780	11,600	13,100	600	3,870	4,670	2.7	17.7	21.4	3.00
	035	050	050			2,900	4,350	4,350			2,780	11,600	13,100	600	3,870	4,670	2.7	17.7	21.4	3.00
	035	050	068			2,690	4,030	5,380			2,780	12,100	13,700	600	3,910	4,710	2.7	17.9	21.6	3.09
	035	068	068			2,420	4,840	4,840			2,780	12,100	13,700	600	3,910	4,710	2.7	17.9	21.6	3.09
	050	050	050			4,030	4,030	4,030			2,780	12,100	13,700	600	3,910	4,710	2.7	17.9	21.6	3.09
	050	050	068			3,630	3,630	4,840			2,780	12,100	13,700	600	3,910	4,710	2.7	17.9	21.6	3.09
4	020	020	020	020		2,050	2,050	2,050	2,050		3,000	8,210	9,030	700	2,600	2,860	3.2	11.9	13.1	3.16
	020	020	020	025		2,050	2,050	2,050	2,640		3,000	8,790	9,670	700	2,760	3,040	3.2	12.6	13.9	3.18
	020	020	020	035		2,050	2,050	2,050	3,520		3,000	9,670	10,640	700	3,140	3,450	3.2	14.4	15.8	3.08
	020	020	020	050		2,050	2,050	2,050	5,280		3,000	11,430	12,570	700	4,080	4,490	3.2	18.7	20.5	2.80
	020	020	020	068		1,880	1,880	1,880	6,450		3,000	12,100	13,700	700	3,910	4,710	3.2	17.9	21.6	3.09
	020	020	025	025		2,050	2,050	2,640	2,640		3,000	9,380	10,320	700	2,980	3,280	3.2	13.6	15.0	3.15
	020	020	025	035		2,050	2,050	2,640	3,520		3,000	10,260	11,280	700	3,300	3,630	3.2	15.1	16.6	3.11
	020	020	025	050		2,050	2,050	2,640	5,280		3,000	12,020	13,220	700	4,100	4,510	3.2	18.8	20.6	2.93
	020	020	025	068		1,800	1,800	2,320	6,180		3,000	12,100	13,700	700	3,910	4,710	3.2	17.9	21.6	3.09
	020	020	035	035		2,050	2,050	3,520	3,520		3,000	11,140	12,250	700	4,060	4,470	3.2	18.6	20.5	2.74
	020	020	035	050		1,930	1,930	3,300	4,950		3,000	12,100	13,700	700	3,910	4,710	3.2	17.9	21.6	3.09
	020	020	035	068		1,690	1,690	2,900	5,810		3,000	12,100	13,700	700	3,910	4,710	3.2	17.9	21.6	3.09
	020	020	050	050		1,690	1,690	4,360	4,360		3,000	12,100	13,700	700	3,910	4,710	3.2	17.9	21.6	3.09
	020	020	050	068		1,560	1,560	4,020	5,360		3,000	12,500	14,100	700	3,950	4,750	3.2	18.1	21.7	3.16
	020	025	025	025		2,050	2,640	2,640	2,640		3,000	9,960	10,960	700	3,140	3,450	3.2	14.4	15.8	3.17
	020	025	025	035		2,050	2,640	2,640	3,520		3,000	10,840	11,930	700	4,030	4,430	3.2	18.4	20.3	2.69
	020	025	025	050		1,970	2,530	2,530	5,070		3,000	12,100	13,700	700	3,910	4,710	3.2	17.9	21.6	3.09
	020	025	025	068		1,730	2,220	2,220	5,930		3,000	12,100	13,700	700	3,910	4,710	3.2	17.9	21.6	3.09
	020	025	035	035		2,050	2,640	3,520	3,520		3,000	11,720	12,900	700	4,080	4,490	3.2	18.7	20.5	2.87
	020	025	035	050		1,840	2,370	3,160	4,730		3,000	12,100	13,700	700	3,910	4,710	3.2	17.9	21.6	3.09
	020	025	035	068		1,680	2,160	2,880	5,770		3,000	12,500	14,100	700	3,950	4,750	3.2	18.1	21.7	3.16
	020	025	050	050		1,680	2,160	4,330	4,330		3,000	12,500	14,100	700	3,950	4,750	3.2	18.1	21.7	3.16
	020	025	050	068		1,510	1,940	3,880	5,170		3,000	12,500	14,100	700	3,950	4,750	3.2	18.1	21.7	3.16
	020	035	035	035		1,970	3,380	3,380	3,380		3,000	12,100	13,700	700	3,910	4,710	3.2	17.9	21.6	3.09
	020	035	035	050		1,730	2,960	2,960	4,440		3,000	12,100	13,700	700	3,910	4,710	3.2	17.9	21.6	3.09
	020	035	035	068		1,590	2,730	2,730	5,450		3,000	12,500	14,100	700	3,950	4,750	3.2	18.1	21.7	3.16
	020	035	050	050		1,590	2,730	4,090	4,090		3,000	12,500	14,100	700	3,950	4,750	3.2	18.1	21.7	3.16
	020	035	050	068		1,430	2,460	3,690	4,920		3,000	12,500	14,100	700	3,950	4,750	3.2	18.1	21.7	3.16
	020	050	050	050		1,430	3,690	3,690	3,690		3,000	12,500	14,100	700	3,950	4,750	3.2	18.1	21.7	3.16
	025	025	025	025		2,640	2,640	2,640	2,640		3,000	10,550	11,610	700	3,300	3,630	3.2	15.1	16.6	3.20
	025	025	025	035		2,640	2,640	2,640	3,520		3,000	11,430	12,570	700	4,060	4,470	3.2	18.6	20.5	2.82
	025	025	025	050		2,420	2,420	2,420	4,840		3,000	12,100	13,700	700	3,910	4,710	3.2	17.9	21.6	3.09
	025	025	025	068		2,210	2,210	2,210	5,880		3,000	12,500	14,100	700	3,950	4,750	3.2	18.1	21.7	3.16
	025	025	035	035		2,590	2,590	3,460	3,460		3,000	12,100	13,540	700	3,910	4,520	3.2	17.9	20.7	3.09
	025	025	035	050		2,270	2,270	3,030	4,540		3,000	12,100	13,700	700	3,910	4,710	3.2	17.9	21.6	3.09
	025	025	035	068		2,080	2,080	2,780	5,560		3,000	12,500	14,100	700	3,950	4,750	3.2	18.1	21.7	3.16
	025	025	050	050		2,080	2,080	4,170	4,170		3,000	12,500	14,100	700	3,950	4,750	3.2	18.1	21.7	3.16
	025	025	050	068		1,880	1,880	3,750	5,000		3,000	12,500	14,100	700	3,950	4,750	3.2	18.1	21.7	3.16

4. Combination Table

4-6 AJ125TXJ5KH/EA

COOLING

Unit	Indoor Unit					Cooling Capacity (W)					Capacity			Power Consumption			Current			EER
	A	B	C	D	E	A	B	C	D	E	W			W			A			W/W
											MIN	Rated	MAX	MIN	Rated	MAX	MIN	Rated	MAX	Rated
4	025	035	035	035		2,420	3,230	3,230	3,230		3,000	12,100	13,700	700	3,910	4,710	3.2	17.9	21.6	3.09
	025	035	035	050		2,210	2,940	2,940	4,410		3,000	12,500	14,100	700	3,950	4,750	3.2	18.1	21.7	3.16
	025	035	035	068		1,970	2,630	2,630	5,260		3,000	12,500	14,100	700	3,950	4,750	3.2	18.1	21.7	3.16
	025	035	050	050		1,970	2,630	3,950	3,950		3,000	12,500	14,100	700	3,950	4,750	3.2	18.1	21.7	3.16
	025	050	050	050		1,790	3,570	3,570	3,570		3,000	12,500	14,100	700	3,950	4,750	3.2	18.1	21.7	3.16
	035	035	035	035		3,030	3,030	3,030	3,030		3,000	12,100	13,700	700	3,910	4,710	3.2	17.9	21.6	3.09
	035	035	035	050		2,780	2,780	2,780	4,170		3,000	12,500	14,100	700	3,950	4,750	3.2	18.1	21.7	3.16
	035	035	035	068		2,500	2,500	2,500	5,000		3,000	12,500	14,100	700	3,950	4,750	3.2	18.1	21.7	3.16
	035	035	050	050		2,500	2,500	3,750	3,750		3,000	12,500	14,100	700	3,950	4,750	3.2	18.1	21.7	3.16
5	020	020	020	020	020	2,050	2,050	2,050	2,050	2,050	3,000	10,260	11,280	700	3,330	3,660	3.2	15.2	16.8	3.08
	020	020	020	020	025	2,050	2,050	2,050	2,050	2,640	3,000	10,840	11,930	700	4,060	4,470	3.2	18.6	20.5	2.67
	020	020	020	020	035	2,050	2,050	2,050	2,050	3,520	3,000	11,720	12,900	700	4,110	4,520	3.2	18.8	20.7	2.85
	020	020	020	020	050	1,900	1,900	1,900	1,900	4,890	3,000	12,500	14,500	700	3,950	4,870	3.2	18.1	22.3	3.16
	020	020	020	020	068	1,680	1,680	1,680	1,680	5,770	3,000	12,500	14,500	700	3,950	4,870	3.2	18.1	22.3	3.16
	020	020	020	025	025	2,050	2,050	2,050	2,640	2,640	3,000	11,430	12,570	700	4,090	4,500	3.2	18.7	20.6	2.79
	020	020	020	025	035	2,050	2,050	2,050	2,640	3,520	3,000	12,310	13,540	700	4,140	4,550	3.2	18.9	20.8	2.97
	020	020	020	025	050	1,820	1,820	1,820	2,340	4,690	3,000	12,500	14,500	700	3,950	4,870	3.2	18.1	22.3	3.16
	020	020	020	025	068	1,620	1,620	1,620	2,080	5,560	3,000	12,500	14,500	700	3,950	4,870	3.2	18.1	22.3	3.16
	020	020	020	035	035	1,940	1,940	1,940	3,330	3,330	3,000	12,500	14,100	700	3,950	4,750	3.2	18.1	21.7	3.16
	020	020	020	035	050	1,720	1,720	1,720	2,940	4,410	3,000	12,500	14,500	700	3,950	4,870	3.2	18.1	22.3	3.16
	020	020	020	035	068	1,540	1,540	1,540	2,630	5,260	3,000	12,500	14,500	700	3,950	4,870	3.2	18.1	22.3	3.16
	020	020	020	050	050	1,540	1,540	1,540	3,950	3,950	3,000	12,500	14,500	700	3,950	4,870	3.2	18.1	22.3	3.16
	020	020	025	025	025	2,050	2,050	2,640	2,640	2,640	3,000	12,020	13,220	700	4,110	4,520	3.2	18.8	20.7	2.92
	020	020	025	025	035	1,990	1,990	2,560	2,560	3,410	3,000	12,500	14,100	700	3,950	4,750	3.2	18.1	21.7	3.16
	020	020	025	025	050	1,750	1,750	2,250	2,250	4,500	3,000	12,500	14,500	700	3,950	4,870	3.2	18.1	22.3	3.16
	020	020	025	025	068	1,560	1,560	2,010	2,010	5,360	3,000	12,500	14,500	700	3,950	4,870	3.2	18.1	22.3	3.16
	020	020	025	035	035	1,860	1,860	2,390	3,190	3,190	3,000	12,500	14,500	700	3,950	4,870	3.2	18.1	22.3	3.16
	020	020	025	035	050	1,650	1,650	2,120	2,830	4,250	3,000	12,500	14,500	700	3,950	4,870	3.2	18.1	22.3	3.16
	020	020	025	035	068	1,480	1,480	1,910	2,540	5,080	3,000	12,500	14,500	700	3,950	4,870	3.2	18.1	22.3	3.16
	020	020	025	050	050	1,480	1,480	1,910	3,810	3,810	3,000	12,500	14,500	700	3,950	4,870	3.2	18.1	22.3	3.16
	020	020	035	035	035	1,750	1,750	3,000	3,000	3,000	3,000	12,500	14,500	700	3,950	4,870	3.2	18.1	22.3	3.16
	020	020	035	035	050	1,560	1,560	2,680	2,680	4,020	3,000	12,500	14,500	700	3,950	4,870	3.2	18.1	22.3	3.16
	020	020	035	050	050	1,410	1,410	2,420	3,630	3,630	3,000	12,500	14,500	700	3,950	4,870	3.2	18.1	22.3	3.16
	020	025	025	025	025	2,030	2,620	2,620	2,620	2,620	3,000	12,500	13,860	700	3,950	4,550	3.2	18.1	20.8	3.16
	020	025	025	025	035	1,900	2,450	2,450	2,450	3,260	3,000	12,500	14,500	700	3,950	4,870	3.2	18.1	22.3	3.16
	020	025	025	025	050	1,680	2,160	2,160	2,160	4,330	3,000	12,500	14,500	700	3,950	4,870	3.2	18.1	22.3	3.16
	020	025	025	025	068	1,510	1,940	1,940	1,940	5,170	3,000	12,500	14,500	700	3,950	4,870	3.2	18.1	22.3	3.16
	020	025	025	035	035	1,790	2,300	2,300	3,060	3,060	3,000	12,500	14,500	700	3,950	4,870	3.2	18.1	22.3	3.16
	020	025	025	035	050	1,590	2,050	2,050	2,730	4,090	3,000	12,500	14,500	700	3,950	4,870	3.2	18.1	22.3	3.16
	020	025	025	035	068	1,430	1,840	1,840	2,460	4,920	3,000	12,500	14,500	700	3,950	4,870	3.2	18.1	22.3	3.16
	020	025	025	050	050	1,430	1,840	1,840	3,690	3,690	3,000	12,500	14,500	700	3,950	4,870	3.2	18.1	22.3	3.16
	020	025	035	035	035	1,680	2,160	2,880	2,880	2,880	3,000	12,500	14,500	700	3,950	4,870	3.2	18.1	22.3	3.16
	020	025	035	035	050	1,510	1,940	2,590	2,590	3,880	3,000	12,500	14,500	700	3,950	4,870	3.2	18.1	22.3	3.16
	020	035	035	035	035	1,590	2,730	2,730	2,730	2,730	3,000	12,500	14,500	700	3,950	4,870	3.2	18.1	22.3	3.16
	020	035	035	035	050	1,430	2,460	2,460	2,460	3,690	3,000	12,500	14,500	700	3,950	4,870	3.2	18.1	22.3	3.16

4. Combination Table

4-6 AJ125TXJ5KH/EA

COOLING

Unit	Indoor Unit					Cooling Capacity (W)					Capacity			Power Consumption			Current			EER
	A	B	C	D	E	A	B	C	D	E	W			W			A			W/W
											MIN	Rated	MAX	MIN	Rated	MAX	MIN	Rated	MAX	Rated
5	025	025	025	025	025	2,500	2,500	2,500	2,500	2,500	3,000	12,500	14,500	700	3,950	4,870	3.2	18.1	22.3	3.16
	025	025	025	025	035	2,340	2,340	2,340	2,340	3,130	3,000	12,500	14,500	700	3,950	4,870	3.2	18.1	22.3	3.16
	025	025	025	025	050	2,080	2,080	2,080	2,080	4,170	3,000	12,500	14,500	700	3,950	4,870	3.2	18.1	22.3	3.16
	025	025	025	025	068	1,880	1,880	1,880	1,880	5,000	3,000	12,500	14,500	700	3,950	4,870	3.2	18.1	22.3	3.16
	025	025	025	035	035	2,210	2,210	2,210	2,940	2,940	3,000	12,500	14,500	700	3,950	4,870	3.2	18.1	22.3	3.16
	025	025	025	035	050	1,970	1,970	1,970	2,630	3,950	3,000	12,500	14,500	700	3,950	4,870	3.2	18.1	22.3	3.16
	025	025	025	050	050	1,790	1,790	1,790	3,570	3,570	3,000	12,500	14,500	700	3,950	4,870	3.2	18.1	22.3	3.16
	025	025	035	035	035	2,080	2,080	2,780	2,780	2,780	3,000	12,500	14,500	700	3,950	4,870	3.2	18.1	22.3	3.16
	025	025	035	035	050	1,880	1,880	2,500	2,500	3,750	3,000	12,500	14,500	700	3,950	4,870	3.2	18.1	22.3	3.16
	025	035	035	035	035	1,970	2,630	2,630	2,630	2,630	3,000	12,500	14,500	700	3,950	4,870	3.2	18.1	22.3	3.16
	035	035	035	035	035	2,500	2,500	2,500	2,500	2,500	3,000	12,500	14,500	700	3,950	4,870	3.2	18.1	22.3	3.16

HEATING

Unit	Indoor Unit					Heating Capacity (W)					Capacity			Power Consumption			Current			EER
	A	B	C	D	E	A	B	C	D	E	W			W			A			W/W
											MIN	Rated	MAX	MIN	Rated	MAX	MIN	Rated	MAX	Rated
1	020					2,200					2,200	2,200	2,500	690	1,150	1,250	3.2	5.3	5.7	1.91
	025					3,200					2,230	3,200	3,500	690	1,410	1,520	3.2	6.5	7.0	2.27
	035					4,000					2,230	4,000	4,400	690	1,660	1,800	3.2	7.6	8.2	2.41
	050					6,000					2,230	6,000	6,400	690	2,180	2,360	3.2	10.0	10.8	2.75
	068					8,000					2,230	8,000	8,400	690	3,200	3,470	3.2	14.6	15.9	2.50
2	020	020				2,200	2,200				2,230	4,400	5,890	450	1,400	2,300	2.1	6.4	10.5	3.14
	020	025				2,360	3,030				2,230	5,390	6,860	450	1,690	2,600	2.1	7.7	11.9	3.19
	020	035				2,320	3,980				2,230	6,300	7,620	450	1,850	2,900	2.1	8.5	13.3	3.41
	020	050				2,260	5,800				2,230	8,060	12,690	450	2,550	3,600	2.1	11.7	16.5	3.16
	020	068				2,180	7,490				2,230	9,670	15,040	450	3,050	4,200	2.1	14.0	19.2	3.17
	025	025				3,200	3,200				2,230	6,390	7,830	450	1,890	3,000	2.1	8.6	13.7	3.38
	025	035				3,130	4,170				2,230	7,300	8,590	450	2,060	3,300	2.1	9.4	15.1	3.54
	025	050				3,020	6,040				2,230	9,060	13,860	450	2,760	3,900	2.1	12.6	17.8	3.28
	025	068				2,910	7,760				2,230	10,670	14,100	450	3,260	4,250	2.1	14.9	19.5	3.27
	035	035				4,110	4,110				2,230	8,210	9,380	450	2,220	3,500	2.1	10.2	16.0	3.70
	035	050				3,980	5,980				2,230	9,960	14,800	450	2,990	4,200	2.1	13.7	19.2	3.33
	035	068				3,860	7,720				2,230	11,580	14,100	450	3,430	4,200	2.1	15.7	19.2	3.38
	050	050				5,860	5,860				2,230	11,720	14,100	450	3,440	4,200	2.1	15.7	19.2	3.41
	050	068				5,140	6,850				2,230	11,990	14,770	450	3,380	4,400	2.1	15.5	20.1	3.55
	068	068				6,500	6,500				2,230	13,000	15,060	450	3,410	4,650	2.1	15.6	21.3	3.81
3	020	020	020			2,150	2,150	2,150			2,230	6,450	9,730	450	2,030	2,900	2.1	9.3	13.3	3.18
	020	020	025			2,190	2,190	2,820			2,230	7,210	10,900	450	2,240	3,200	2.1	10.3	14.6	3.22
	020	020	035			2,300	2,300	3,950			2,230	8,560	12,920	450	2,600	3,700	2.1	11.9	16.9	3.29
	020	020	050			2,210	2,210	5,690			2,230	10,110	14,100	450	3,110	4,250	2.1	14.2	19.5	3.25
	020	020	068			2,060	2,060	7,050			2,230	11,170	14,500	450	3,410	4,250	2.1	15.6	19.5	3.28
	020	025	025			2,440	3,130	3,130			2,230	8,700	13,160	450	2,650	3,700	2.1	12.1	16.9	3.28
	020	025	035			2,330	3,000	3,990			2,230	9,320	14,100	450	2,810	4,000	2.1	12.9	18.3	3.32
	020	025	050			2,240	2,880	5,750			2,230	10,870	14,100	450	3,320	4,200	2.1	15.2	19.2	3.27
	020	025	068			2,070	2,660	7,100			2,230	11,840	14,600	450	3,340	4,300	2.1	15.3	19.7	3.54

4. Combination Table

4-6 AJ125TXJ5KH/EA

HEATING

Unit	Indoor Unit					Heating Capacity (W)					Capacity			Power Consumption			Current			EER
	A	B	C	D	E	A	B	C	D	E	W			W			A			W/W
											MIN	Rated	MAX	MIN	Rated	MAX	MIN	Rated	MAX	Rated
3	020	035	035			2,240	3,850	3,850			2,230	9,940	14,100	450	3,050	4,150	2.1	14.0	19.0	3.26
	020	035	050			2,270	3,900	5,850			2,230	12,020	14,500	450	3,370	4,250	2.1	15.4	19.5	3.57
	020	035	068			1,950	3,340	6,680			2,230	11,960	14,740	450	3,370	4,400	2.1	15.4	20.1	3.55
	020	050	050			1,940	4,980	4,980			2,230	11,900	14,650	450	3,360	4,400	2.1	15.4	20.1	3.54
	020	050	068			1,860	4,780	6,370			2,230	13,000	15,090	450	3,410	4,690	2.1	15.6	21.5	3.81
	020	068	068			1,650	5,670	5,670			2,230	13,000	15,500	450	3,410	4,810	2.1	15.6	22.0	3.81
	025	025	025			3,160	3,160	3,160			2,230	9,470	14,330	450	2,860	4,000	2.1	13.1	18.3	3.31
	025	025	035			3,030	3,030	4,040			2,230	10,110	14,100	450	3,090	4,150	2.1	14.1	19.0	3.27
	025	025	050			2,790	2,790	5,590			2,230	11,170	14,100	450	3,400	4,200	2.1	15.6	19.2	3.29
	025	025	068			2,570	2,570	6,850			2,230	11,990	14,770	450	3,380	4,400	2.1	15.5	20.1	3.55
	025	035	035			2,930	3,900	3,900			2,230	10,730	14,100	450	3,260	4,250	2.1	14.9	19.5	3.29
	025	035	050			2,730	3,630	5,450			2,230	11,810	14,540	450	3,320	4,300	2.1	15.2	19.7	3.56
	025	035	068			2,430	3,230	6,470			2,230	12,130	14,950	450	3,410	4,400	2.1	15.6	20.1	3.56
	025	050	050			2,430	4,850	4,850			2,230	12,130	14,950	450	3,420	4,500	2.1	15.7	20.6	3.55
	025	050	068			2,290	4,590	6,120			2,230	13,000	15,300	450	3,410	4,740	2.1	15.6	21.7	3.81
	025	068	068			2,050	5,470	5,470			2,230	13,000	15,710	450	3,410	4,860	2.1	15.6	22.2	3.81
	035	035	035			3,780	3,780	3,780			2,230	11,340	14,100	450	3,430	4,200	2.1	15.7	19.2	3.31
	035	035	050			3,410	3,410	5,110			2,230	11,930	14,710	450	3,350	4,400	2.1	15.3	20.1	3.56
	035	035	068			3,250	3,250	6,500			2,230	13,000	15,060	450	3,410	4,650	2.1	15.6	21.3	3.81
	035	050	050			3,250	4,880	4,880			2,230	13,000	15,060	450	3,410	4,660	2.1	15.6	21.3	3.81
	035	050	068			2,890	4,330	5,780			2,230	13,000	15,470	450	3,410	4,780	2.1	15.6	21.9	3.81
	035	068	068			2,600	5,200	5,200			2,230	13,000	15,800	450	3,410	4,860	2.1	15.6	22.2	3.81
	050	050	050			4,330	4,330	4,330			2,230	13,000	15,470	450	3,410	4,790	2.1	15.6	21.9	3.81
	050	050	068			3,900	3,900	5,200			2,230	13,000	15,800	450	3,410	4,860	2.1	15.6	22.2	3.81
4	020	020	020	020		2,320	2,320	2,320	2,320		3,400	9,260	11,400	550	2,630	3,500	2.5	12.0	16.0	3.52
	020	020	020	025		2,350	2,350	2,350	3,020		3,400	10,080	12,430	550	2,900	3,800	2.5	13.3	17.4	3.48
	020	020	020	035		2,280	2,280	2,280	3,900		3,400	10,730	13,220	550	3,060	4,000	2.5	14.0	18.3	3.51
	020	020	020	050		2,210	2,210	2,210	5,680		3,400	12,310	14,680	550	3,270	4,600	2.5	15.0	21.1	3.76
	020	020	020	068		1,960	1,960	1,960	6,740		3,400	12,630	15,090	550	3,360	4,700	2.5	15.4	21.5	3.76
	020	020	025	025		2,380	2,380	3,060	3,060		3,400	10,870	13,420	550	3,100	4,000	2.5	14.2	18.3	3.51
	020	020	025	035		2,310	2,310	2,970	3,960		3,400	11,550	14,210	550	3,270	4,200	2.5	15.0	19.2	3.53
	020	020	025	050		2,130	2,130	2,740	5,480		3,400	12,490	14,890	550	3,310	4,600	2.5	15.1	21.1	3.77
	020	020	025	068		1,910	1,910	2,450	6,540		3,400	12,810	15,300	550	3,400	4,700	2.5	15.6	21.5	3.77
	020	020	035	035		2,260	2,260	3,880	3,880		3,400	12,280	14,650	550	3,240	4,500	2.5	14.8	20.6	3.79
	020	020	035	050		2,000	2,000	3,440	5,150		3,400	12,600	15,060	550	3,340	4,700	2.5	15.3	21.5	3.77
	020	020	035	068		1,820	1,820	3,120	6,240		3,400	13,000	15,150	550	3,410	4,710	2.5	15.6	21.6	3.81
	020	020	050	050		1,820	1,820	4,680	4,680		3,400	13,000	15,150	550	3,410	4,720	2.5	15.6	21.6	3.81
	020	020	050	068		1,690	1,690	4,340	5,790		3,400	13,500	15,800	550	3,460	4,860	2.5	15.8	22.2	3.90
	020	025	025	025		2,410	3,090	3,090	3,090		3,400	11,690	14,420	550	3,310	4,300	2.5	15.1	19.7	3.53
	020	025	025	035		2,210	2,840	2,840	3,790		3,400	11,690	14,420	550	3,310	4,300	2.5	15.1	19.7	3.53
	020	025	025	050		2,060	2,640	2,640	5,290		3,400	12,630	15,090	550	3,350	4,700	2.5	15.3	21.5	3.77
	020	025	025	068		1,860	2,390	2,390	6,370		3,400	13,000	15,180	550	3,410	4,720	2.5	15.6	21.6	3.81
	020	025	035	035		2,180	2,800	3,730	3,730		3,400	12,430	14,860	550	3,290	4,600	2.5	15.1	21.1	3.78
	020	025	035	050		1,940	2,500	3,330	5,000		3,400	12,780	15,270	550	3,380	4,700	2.5	15.5	21.5	3.78
	020	025	035	068		1,820	2,340	3,120	6,230		3,400	13,500	15,800	550	3,460	4,860	2.5	15.8	22.2	3.90

4. Combination Table

4-6 AJ125TXJ5KH/EA

HEATING

Unit	Indoor Unit					Heating Capacity (W)					Capacity			Power Consumption			Current			EER
	A	B	C	D	E	A	B	C	D	E	W			W			A			W/W
											MIN	Rated	MAX	MIN	Rated	MAX	MIN	Rated	MAX	Rated
4	020	025	050	050		1,820	2,340	4,670	4,670		3,400	13,500	15,800	550	3,460	4,860	2.5	15.8	22.2	3.90
	020	025	050	068		1,630	2,090	4,190	5,590		3,400	13,500	15,800	550	3,460	4,860	2.5	15.8	22.2	3.90
	020	035	035	035		2,050	3,510	3,510	3,510		3,400	12,570	15,010	550	3,320	4,600	2.5	15.2	21.1	3.79
	020	035	035	050		1,860	3,180	3,180	4,780		3,400	13,000	15,090	550	3,410	4,690	2.5	15.6	21.5	3.81
	020	035	035	068		1,720	2,950	2,950	5,890		3,400	13,500	15,800	550	3,460	4,860	2.5	15.8	22.2	3.90
	020	035	050	050		1,720	2,950	4,420	4,420		3,400	13,500	15,800	550	3,460	4,860	2.5	15.8	22.2	3.90
	020	035	050	068		1,550	2,660	3,980	5,310		3,400	13,500	15,800	550	3,460	4,860	2.5	15.8	22.2	3.90
	020	050	050	050		1,550	3,980	3,980	3,980		3,400	13,500	15,800	550	3,460	4,860	2.5	15.8	22.2	3.90
	025	025	025	025		2,930	2,930	2,930	2,930		3,400	11,720	14,450	550	3,310	4,300	2.5	15.1	19.7	3.54
	025	025	025	035		2,880	2,880	2,880	3,840		3,400	12,490	14,890	550	3,290	4,600	2.5	15.1	21.1	3.80
	025	025	025	050		2,560	2,560	2,560	5,120		3,400	12,810	15,300	550	3,390	4,700	2.5	15.5	21.5	3.78
	025	025	025	068		2,380	2,380	2,380	6,350		3,400	13,500	15,800	550	3,460	4,860	2.5	15.8	22.2	3.90
	025	025	035	035		2,700	2,700	3,600	3,600		3,400	12,600	15,060	550	3,320	4,700	2.5	15.2	21.5	3.80
	025	025	035	050		2,440	2,440	3,250	4,880		3,400	13,000	15,150	550	3,410	4,700	2.5	15.6	21.5	3.81
	025	025	035	068		2,250	2,250	3,000	6,000		3,400	13,500	15,800	550	3,460	4,860	2.5	15.8	22.2	3.90
	025	025	050	050		2,250	2,250	4,500	4,500		3,400	13,500	15,800	550	3,460	4,860	2.5	15.8	22.2	3.90
	025	025	050	068		2,030	2,030	4,050	5,400		3,400	13,500	15,800	550	3,460	4,860	2.5	15.8	22.2	3.90
	025	035	035	035		2,550	3,400	3,400	3,400		3,400	12,750	15,210	550	3,350	4,700	2.5	15.3	21.5	3.81
	025	035	035	050		2,380	3,180	3,180	4,760		3,400	13,500	15,800	550	3,460	4,860	2.5	15.8	22.2	3.90
	025	035	035	068		2,130	2,840	2,840	5,680		3,400	13,500	15,800	550	3,460	4,860	2.5	15.8	22.2	3.90
	025	035	050	050		2,130	2,840	4,260	4,260		3,400	13,500	15,800	550	3,460	4,860	2.5	15.8	22.2	3.90
	025	050	050	050		1,930	3,860	3,860	3,860		3,400	13,500	15,800	550	3,460	4,860	2.5	15.8	22.2	3.90
	035	035	035	035		3,250	3,250	3,250	3,250		3,400	13,000	15,060	550	3,410	4,650	2.5	15.6	21.3	3.81
	035	035	035	050		3,000	3,000	3,000	4,500		3,400	13,500	15,800	550	3,460	4,860	2.5	15.8	22.2	3.90
	035	035	035	068		2,700	2,700	2,700	5,400		3,400	13,500	15,800	550	3,460	4,860	2.5	15.8	22.2	3.90
	035	035	050	050		2,700	2,700	4,050	4,050		3,400	13,500	15,800	550	3,460	4,860	2.5	15.8	22.2	3.90
5	020	020	020	020	020	2,200	2,200	2,200	2,200	2,200	3,400	11,000	13,630	550	3,170	4,100	2.5	14.5	18.8	3.47
	020	020	020	020	025	2,270	2,270	2,270	2,270	2,920	3,400	12,000	14,620	550	3,380	4,400	2.5	15.5	20.1	3.55
	020	020	020	020	035	2,240	2,240	2,240	2,240	3,840	3,400	12,800	14,450	550	3,340	4,300	2.5	15.3	19.7	3.83
	020	020	020	020	050	2,050	2,050	2,050	2,050	5,280	3,400	13,500	15,800	550	3,460	4,860	2.5	15.8	22.2	3.90
	020	020	020	020	068	1,820	1,820	1,820	1,820	6,230	3,400	13,500	15,800	550	3,460	4,860	2.5	15.8	22.2	3.90
	020	020	020	025	025	2,330	2,330	2,330	3,000	3,000	3,400	13,000	14,770	550	3,300	4,600	2.5	15.1	21.1	3.94
	020	020	020	025	035	2,250	2,250	2,250	2,890	3,860	3,400	13,500	15,800	550	3,460	4,860	2.5	15.8	22.2	3.90
	020	020	020	025	050	1,970	1,970	1,970	2,530	5,060	3,400	13,500	15,800	550	3,460	4,860	2.5	15.8	22.2	3.90
	020	020	020	025	068	1,750	1,750	1,750	2,250	6,000	3,400	13,500	15,800	550	3,460	4,860	2.5	15.8	22.2	3.90
	020	020	020	035	035	2,100	2,100	2,100	3,600	3,600	3,400	13,500	15,800	550	3,460	4,860	2.5	15.8	22.2	3.90
	020	020	020	035	050	1,850	1,850	1,850	3,180	4,760	3,400	13,500	15,800	550	3,460	4,860	2.5	15.8	22.2	3.90
	020	020	020	035	068	1,660	1,660	1,660	2,840	5,680	3,400	13,500	15,800	550	3,460	4,860	2.5	15.8	22.2	3.90
	020	020	020	050	050	1,660	1,660	1,660	4,260	4,260	3,400	13,500	15,800	550	3,460	4,860	2.5	15.8	22.2	3.90
	020	020	025	025	025	2,300	2,300	2,960	2,960	2,960	3,400	13,500	15,800	550	3,460	4,860	2.5	15.8	22.2	3.90
	020	020	025	025	035	2,150	2,150	2,760	2,760	3,680	3,400	13,500	15,800	550	3,460	4,860	2.5	15.8	22.2	3.90
	020	020	025	025	050	1,890	1,890	2,430	2,430	4,860	3,400	13,500	15,800	550	3,460	4,860	2.5	15.8	22.2	3.90
	020	020	025	025	068	1,690	1,690	2,170	2,170	5,790	3,400	13,500	15,800	550	3,460	4,860	2.5	15.8	22.2	3.90
	020	020	025	035	035	2,010	2,010	2,590	3,450	3,450	3,400	13,500	15,800	550	3,460	4,860	2.5	15.8	22.2	3.90
	020	020	025	035	050	1,780	1,780	2,290	3,060	4,580	3,400	13,500	15,800	550	3,460	4,860	2.5	15.8	22.2	3.90

4. Combination Table

4-6 AJ125TXJ5KH/EA

HEATING

Unit	Indoor Unit					Heating Capacity (W)					Capacity			Power Consumption			Current			EER
	A	B	C	D	E	A	B	C	D	E	W			W			A			W/W
											MIN	Rated	MAX	MIN	Rated	MAX	MIN	Rated	MAX	Rated
5	020	020	025	035	068	1,600	1,600	2,060	2,750	5,490	3,400	13,500	15,800	550	3,460	4,860	2.5	15.8	22.2	3.90
	020	020	025	050	050	1,600	1,600	2,060	4,120	4,120	3,400	13,500	15,800	550	3,460	4,860	2.5	15.8	22.2	3.90
	020	020	035	035	035	1,890	1,890	3,240	3,240	3,240	3,400	13,500	15,800	550	3,460	4,860	2.5	15.8	22.2	3.90
	020	020	035	035	050	1,690	1,690	2,890	2,890	4,340	3,400	13,500	15,800	550	3,460	4,860	2.5	15.8	22.2	3.90
	020	020	035	050	050	1,520	1,520	2,610	3,920	3,920	3,400	13,500	15,800	550	3,460	4,860	2.5	15.8	22.2	3.90
	020	025	025	025	025	2,200	2,830	2,830	2,830	2,830	3,400	13,500	15,800	550	3,460	4,860	2.5	15.8	22.2	3.90
	020	025	025	025	035	2,050	2,640	2,640	2,640	3,520	3,400	13,500	15,800	550	3,460	4,860	2.5	15.8	22.2	3.90
	020	025	025	025	050	1,820	2,340	2,340	2,340	4,670	3,400	13,500	15,800	550	3,460	4,860	2.5	15.8	22.2	3.90
	020	025	025	025	068	1,630	2,090	2,090	2,090	5,590	3,400	13,500	15,800	550	3,460	4,860	2.5	15.8	22.2	3.90
	020	025	025	035	035	1,930	2,480	2,480	3,310	3,310	3,400	13,500	15,800	550	3,460	4,860	2.5	15.8	22.2	3.90
	020	025	025	035	050	1,720	2,210	2,210	2,950	4,420	3,400	13,500	15,800	550	3,460	4,860	2.5	15.8	22.2	3.90
	020	025	025	035	068	1,550	1,990	1,990	2,660	5,310	3,400	13,500	15,800	550	3,460	4,860	2.5	15.8	22.2	3.90
	020	025	025	050	050	1,550	1,990	1,990	3,980	3,980	3,400	13,500	15,800	550	3,460	4,860	2.5	15.8	22.2	3.90
	020	025	035	035	035	1,820	2,340	3,120	3,120	3,120	3,400	13,500	15,800	550	3,460	4,860	2.5	15.8	22.2	3.90
	020	025	035	035	050	1,630	2,090	2,790	2,790	4,190	3,400	13,500	15,800	550	3,460	4,860	2.5	15.8	22.2	3.90
	020	035	035	035	035	1,720	2,950	2,950	2,950	2,950	3,400	13,500	15,800	550	3,460	4,860	2.5	15.8	22.2	3.90
	020	035	035	035	050	1,550	2,660	2,660	2,660	3,980	3,400	13,500	15,800	550	3,460	4,860	2.5	15.8	22.2	3.90
	025	025	025	025	025	2,700	2,700	2,700	2,700	2,700	3,400	13,500	15,800	550	3,460	4,860	2.5	15.8	22.2	3.90
	025	025	025	025	035	2,530	2,530	2,530	2,530	3,380	3,400	13,500	15,800	550	3,460	4,860	2.5	15.8	22.2	3.90
	025	025	025	025	050	2,250	2,250	2,250	2,250	4,500	3,400	13,500	15,800	550	3,460	4,860	2.5	15.8	22.2	3.90
	025	025	025	025	068	2,030	2,030	2,030	2,030	5,400	3,400	13,500	15,800	550	3,460	4,860	2.5	15.8	22.2	3.90
	025	025	025	035	035	2,380	2,380	2,380	3,180	3,180	3,400	13,500	15,800	550	3,460	4,860	2.5	15.8	22.2	3.90
	025	025	025	035	050	2,130	2,130	2,130	2,840	4,260	3,400	13,500	15,800	550	3,460	4,860	2.5	15.8	22.2	3.90
	025	025	025	050	050	1,930	1,930	1,930	3,860	3,860	3,400	13,500	15,800	550	3,460	4,860	2.5	15.8	22.2	3.90
	025	025	035	035	035	2,250	2,250	3,000	3,000	3,000	3,400	13,500	15,800	550	3,460	4,860	2.5	15.8	22.2	3.90
	025	025	035	035	050	2,030	2,030	2,700	2,700	4,050	3,400	13,500	15,800	550	3,460	4,860	2.5	15.8	22.2	3.90
	025	035	035	035	035	2,130	2,840	2,840	2,840	2,840	3,400	13,500	15,800	550	3,460	4,860	2.5	15.8	22.2	3.90
	035	035	035	035	035	2,700	2,700	2,700	2,700	2,700	3,400	13,500	15,800	550	3,460	4,860	2.5	15.8	22.2	3.90

NOTE

1. Cooling capacity is based on 27°CDB / 19°CWB (indoor temperature), 35°CDB (outdoor temperature).
2. Heating capacity is based on 20°CDB (indoor temperature), 7°CDB/6°CWB (outdoor temperature).
3. The above is the value for connecting with the following indoor units.
   - AJ***TNAPKH : Premium Wind Free
4. You can not connect a single unit.
5. Power consumption include indoor unit power.

4. Combination Table

4-7 AJ140TXJ5KH/EA

COOLING

Unit	Indoor Unit					Cooling Capacity (W)					Capacity			Power Consumption			Current			EER
	A	B	C	D	E	A	B	C	D	E	W			W			A			W/W
											MIN	Rated	MAX	MIN	Rated	MAX	MIN	Rated	MAX	Rated
1	020					2,000					2,490	2,000	2,600	660	730	790	3.0	3.3	3.6	2.74
	025					2,500					2,490	2,500	3,200	660	890	970	3.0	4.1	4.4	2.81
	035					3,500					2,490	3,500	3,800	660	1,160	1,250	3.0	5.3	5.7	3.02
	050					5,000					2,780	5,000	6,300	680	1,670	1,810	3.1	7.6	8.3	2.99
	068					6,200					2,780	6,200	7,600	680	2,120	2,300	3.1	9.7	10.5	2.92
2	020	020				2,050	2,050				2,640	4,100	4,310	650	1,140	1,250	3.0	5.2	5.7	3.60
	020	025				2,050	2,640				2,640	4,690	4,920	651	1,250	1,380	3.0	5.7	6.3	3.75
	020	035				2,050	3,520				2,640	5,570	5,850	652	1,460	1,610	3.0	6.7	7.4	3.82
	020	050				1,980	5,080				2,640	7,060	7,420	654	1,800	1,980	3.0	8.2	9.1	3.92
	020	068				1,920	6,580				2,640	8,500	8,920	655	2,720	2,990	3.0	12.4	13.7	3.13
	025	025				2,640	2,640				2,640	5,280	5,540	656	1,350	1,490	3.0	6.2	6.8	3.91
	025	035				2,640	3,510				2,640	6,150	6,460	657	1,560	1,720	3.0	7.1	7.9	3.94
	025	050				2,550	5,100				2,640	7,650	8,030	659	2,260	2,490	3.0	10.3	11.4	3.38
	025	068				2,480	6,610				2,640	9,090	9,540	660	2,880	3,170	3.0	13.2	14.5	3.16
	035	035				3,520	3,520				2,640	7,030	7,390	661	1,770	1,950	3.0	8.1	8.9	3.97
	035	050				3,410	5,120				2,640	8,530	8,960	663	2,560	2,820	3.0	11.7	12.9	3.33
	035	068				3,320	6,640				2,640	9,960	10,460	664	3,420	3,760	3.0	15.7	17.2	2.91
	050	050				5,010	5,010				2,640	10,020	10,520	668	3,100	3,410	3.1	14.2	15.6	3.23
	050	068				4,910	6,550				2,640	11,460	12,030	669	3,520	3,870	3.1	16.1	17.7	3.26
	068	068				5,800	5,800				2,640	11,600	13,100	670	3,870	4,670	3.1	17.7	21.4	3.00
3	020	020	020			2,050	2,050	2,050			2,780	6,150	6,460	600	1,860	2,050	2.7	8.5	9.4	3.31
	020	020	025			2,050	2,050	2,640			2,780	6,740	7,080	600	2,000	2,200	2.7	9.2	10.1	3.37
	020	020	035			2,050	2,050	3,520			2,780	7,620	8,000	600	2,220	2,440	2.7	10.2	11.2	3.43
	020	020	050			2,050	2,050	5,280			2,780	9,380	9,850	600	2,750	3,030	2.7	12.6	13.9	3.41
	020	020	068			2,050	2,050	7,040			2,780	11,140	11,690	600	3,660	4,590	2.7	16.8	21.0	3.04
	020	025	025			2,050	2,640	2,640			2,780	7,330	7,690	600	2,120	2,330	2.7	9.7	10.7	3.46
	020	025	035			2,050	2,640	3,520			2,780	8,210	8,620	600	2,370	2,610	2.7	10.8	11.9	3.46
	020	025	050			2,050	2,640	5,270			2,780	9,960	10,460	600	2,890	3,180	2.7	13.2	14.6	3.45
	020	025	068			2,030	2,610	6,960			2,780	11,600	12,310	600	3,740	4,610	2.7	17.1	21.1	3.10
	020	035	035			2,050	3,520	3,520			2,780	9,090	9,540	600	2,730	3,000	2.7	12.5	13.7	3.33
	020	035	050			2,050	3,520	5,270			2,780	10,840	11,390	600	3,390	3,730	2.7	15.5	17.1	3.20
	020	035	068			1,890	3,240	6,470			2,780	11,600	13,100	600	3,870	4,670	2.7	17.7	21.4	3.00
	020	050	050			1,890	4,860	4,860			2,780	11,600	13,100	600	3,870	4,670	2.7	17.7	21.4	3.00
	020	050	068			1,660	4,260	5,680			2,780	11,600	13,100	600	3,870	4,670	2.7	17.7	21.4	3.00
	020	068	068			1,540	5,280	5,280			2,780	12,100	13,700	600	3,910	4,710	2.7	17.9	21.6	3.09
	025	025	025			2,640	2,640	2,640			2,780	7,910	8,310	600	2,220	2,440	2.7	10.2	11.2	3.56
	025	025	035			2,640	2,640	3,520			2,780	8,790	9,230	600	2,520	2,770	2.7	11.5	12.7	3.49
	025	025	050			2,640	2,640	5,280			2,780	10,550	11,080	600	3,050	3,360	2.7	14.0	15.4	3.46
	025	025	068			2,490	2,490	6,630			2,780	11,600	12,920	600	3,780	4,640	2.7	17.3	21.2	3.07
	025	035	035			2,640	3,520	3,520			2,780	9,670	10,160	600	2,870	3,160	2.7	13.1	14.5	3.37
	025	035	050			2,640	3,520	5,280			2,780	11,430	12,000	600	3,700	4,590	2.7	16.9	21.0	3.09
	025	035	068			2,320	3,090	6,190			2,780	11,600	13,100	600	3,870	4,670	2.7	17.7	21.4	3.00
	025	050	050			2,320	4,640	4,640			2,780	11,600	13,100	600	3,870	4,670	2.7	17.7	21.4	3.00
	025	050	068			2,140	4,270	5,690			2,780	12,100	13,700	600	3,910	4,710	2.7	17.9	21.6	3.09
	025	068	068			1,910	5,090	5,090			2,780	12,100	13,700	600	3,910	4,710	2.7	17.9	21.6	3.09

4. Combination Table

4-7 AJ140TXJ5KH/EA

COOLING

Unit	Indoor Unit					Cooling Capacity (W)					Capacity			Power Consumption			Current			EER
	A	B	C	D	E	A	B	C	D	E	W			W			A			W/W
											MIN	Rated	MAX	MIN	Rated	MAX	MIN	Rated	MAX	Rated
3	035	035	035			3,520	3,520	3,520			2,780	10,550	11,080	600	3,370	3,710	2.7	15.4	17.0	3.13
	035	035	050			3,310	3,310	4,970			2,780	11,600	12,920	600	3,820	4,640	2.7	17.5	21.2	3.04
	035	035	068			2,900	2,900	5,800			2,780	11,600	13,100	600	3,870	4,670	2.7	17.7	21.4	3.00
	035	050	050			2,900	4,350	4,350			2,780	11,600	13,100	600	3,870	4,670	2.7	17.7	21.4	3.00
	035	050	068			2,690	4,030	5,380			2,780	12,100	13,700	600	3,910	4,710	2.7	17.9	21.6	3.09
	035	068	068			2,420	4,840	4,840			2,780	12,100	13,700	600	3,910	4,710	2.7	17.9	21.6	3.09
	050	050	050			4,030	4,030	4,030			2,780	12,100	13,700	600	3,910	4,710	2.7	17.9	21.6	3.09
	050	050	068			3,630	3,630	4,840			2,780	12,100	13,700	600	3,910	4,710	2.7	17.9	21.6	3.09
4	020	020	020	020		2,050	2,050	2,050	2,050		3,000	8,210	9,030	700	2,600	2,860	3.2	11.9	13.1	3.16
	020	020	020	025		2,050	2,050	2,050	2,640		3,000	8,790	9,670	700	2,760	3,040	3.2	12.6	13.9	3.18
	020	020	020	035		2,050	2,050	2,050	3,520		3,000	9,670	10,640	700	3,140	3,450	3.2	14.4	15.8	3.08
	020	020	020	050		2,050	2,050	2,050	5,280		3,000	11,430	12,570	700	4,080	4,490	3.2	18.7	20.5	2.80
	020	020	020	068		1,880	1,880	1,880	6,450		3,000	12,100	13,700	700	3,910	4,710	3.2	17.9	21.6	3.09
	020	020	025	025		2,050	2,050	2,640	2,640		3,000	9,380	10,320	700	2,980	3,280	3.2	13.6	15.0	3.15
	020	020	025	035		2,050	2,050	2,640	3,520		3,000	10,260	11,280	700	3,300	3,630	3.2	15.1	16.6	3.11
	020	020	025	050		2,050	2,050	2,640	5,280		3,000	12,020	13,220	700	4,100	4,510	3.2	18.8	20.6	2.93
	020	020	025	068		1,800	1,800	2,320	6,180		3,000	12,100	13,700	700	3,910	4,710	3.2	17.9	21.6	3.09
	020	020	035	035		2,050	2,050	3,520	3,520		3,000	11,140	12,250	700	4,060	4,470	3.2	18.6	20.5	2.74
	020	020	035	050		1,930	1,930	3,300	4,950		3,000	12,100	13,700	700	3,910	4,710	3.2	17.9	21.6	3.09
	020	020	035	068		1,690	1,690	2,900	5,810		3,000	12,100	13,700	700	3,910	4,710	3.2	17.9	21.6	3.09
	020	020	050	050		1,690	1,690	4,360	4,360		3,000	12,100	13,700	700	3,910	4,710	3.2	17.9	21.6	3.09
	020	020	050	068		1,740	1,740	4,470	5,960		3,000	13,910	14,950	700	4,820	5,650	3.2	22.1	25.9	2.89
	020	025	025	025		2,050	2,640	2,640	2,640		3,000	9,960	10,960	700	3,140	3,450	3.2	14.4	15.8	3.17
	020	025	025	035		2,050	2,640	2,640	3,520		3,000	10,840	11,930	700	4,030	4,430	3.2	18.4	20.3	2.69
	020	025	025	050		1,970	2,530	2,530	5,070		3,000	12,100	13,700	700	3,910	4,710	3.2	17.9	21.6	3.09
	020	025	025	068		1,730	2,220	2,220	5,930		3,000	12,100	13,700	700	3,910	4,710	3.2	17.9	21.6	3.09
	020	025	035	035		2,050	2,640	3,520	3,520		3,000	11,720	12,900	700	4,080	4,490	3.2	18.7	20.5	2.87
	020	025	035	050		1,840	2,370	3,160	4,730		3,000	12,100	13,700	700	3,910	4,710	3.2	17.9	21.6	3.09
	020	025	035	068		1,720	2,210	2,940	5,880		3,000	12,750	14,250	700	4,520	4,910	3.2	20.7	22.5	2.82
	020	025	050	050		1,740	2,240	4,490	4,490		3,000	12,960	14,380	700	4,570	5,040	3.2	20.9	23.1	2.84
	020	025	050	068		1,690	2,170	4,340	5,790		3,000	14,000	15,000	700	4,840	5,710	3.2	22.2	26.1	2.89
	020	035	035	035		1,970	3,380	3,380	3,380		3,000	12,100	13,700	700	3,910	4,710	3.2	17.9	21.6	3.09
	020	035	035	050		1,730	2,960	2,960	4,440		3,000	12,100	13,700	700	3,910	4,710	3.2	17.9	21.6	3.09
	020	035	035	068		1,740	2,990	2,990	5,980		3,000	13,710	14,830	700	4,770	5,520	3.2	21.8	25.3	2.87
	020	035	050	050		1,760	3,010	4,520	4,520		3,000	13,810	14,890	700	4,790	5,580	3.2	21.9	25.5	2.88
	020	035	050	068		1,610	2,750	4,130	5,510		3,000	14,000	15,000	700	4,840	5,710	3.2	22.2	26.1	2.89
	020	050	050	050		1,610	4,130	4,130	4,130		3,000	14,000	15,000	700	4,840	5,710	3.2	22.2	26.1	2.89
	025	025	025	025		2,640	2,640	2,640	2,640		3,000	10,550	11,610	700	3,300	3,630	3.2	15.1	16.6	3.20
	025	025	025	035		2,640	2,640	2,640	3,520		3,000	11,430	12,570	700	4,060	4,470	3.2	18.6	20.5	2.82
	025	025	025	050		2,420	2,420	2,420	4,840		3,000	12,100	13,700	700	3,910	4,710	3.2	17.9	21.6	3.09
	025	025	025	068		2,210	2,210	2,210	5,880		3,000	12,500	14,100	700	4,450	4,750	3.2	20.4	21.7	2.81
	025	025	035	035		2,590	2,590	3,460	3,460		3,000	12,100	13,540	700	3,910	4,520	3.2	17.9	20.7	3.09
	025	025	035	050		2,270	2,270	3,030	4,540		3,000	12,100	13,700	700	3,910	4,710	3.2	17.9	21.6	3.09
	025	025	035	068		2,200	2,200	2,940	5,880		3,000	13,220	14,540	700	4,640	5,210	3.2	21.2	23.8	2.85
	025	025	050	050		2,240	2,240	4,470	4,470		3,000	13,420	14,660	700	4,690	5,340	3.2	21.5	24.4	2.86

4. Combination Table

4-7 AJ140TXJ5KH/EA

COOLING

Unit	Indoor Unit					Cooling Capacity (W)					Capacity			Power Consumption			Current			EER
	A	B	C	D	E	A	B	C	D	E	W			W			A			W/W
											MIN	Rated	MAX	MIN	Rated	MAX	MIN	Rated	MAX	Rated
4	025	025	050	068		2,100	2,100	4,200	5,600		3,000	14,000	15,000	700	4,840	5,710	3.2	22.2	26.1	2.89
	025	035	035	035		2,420	3,230	3,230	3,230		3,000	12,100	13,700	700	3,910	4,710	3.2	17.9	21.6	3.09
	025	035	035	050		2,210	2,940	2,940	4,410		3,000	12,500	14,100	700	4,450	4,750	3.2	20.4	21.7	2.81
	025	035	035	068		2,210	2,950	2,950	5,890		3,000	14,000	15,000	700	4,840	5,710	3.2	22.2	26.1	2.89
	025	035	050	050		2,210	2,950	4,420	4,420		3,000	14,000	15,000	700	4,840	5,710	3.2	22.2	26.1	2.89
	025	050	050	050		2,000	4,000	4,000	4,000		3,000	14,000	15,000	700	4,840	5,710	3.2	22.2	26.1	2.89
	035	035	035	035		3,030	3,030	3,030	3,030		3,000	12,100	13,700	700	3,910	4,710	3.2	17.9	21.6	3.09
	035	035	035	050		3,020	3,020	3,020	4,520		3,000	13,570	14,750	700	4,730	5,430	3.2	21.6	24.9	2.87
	035	035	035	068		2,800	2,800	2,800	5,600		3,000	14,000	15,000	700	4,840	5,710	3.2	22.2	26.1	2.89
	035	035	050	050		2,800	2,800	4,200	4,200		3,000	14,000	15,000	700	4,840	5,710	3.2	22.2	26.1	2.89
5	020	020	020	020	020	2,050	2,050	2,050	2,050	2,050	3,000	10,260	11,280	700	3,330	3,660	3.2	15.2	16.8	3.08
	020	020	020	020	025	2,050	2,050	2,050	2,050	2,640	3,000	10,840	11,930	700	4,060	4,470	3.2	18.6	20.5	2.67
	020	020	020	020	035	2,050	2,050	2,050	2,050	3,520	3,000	11,720	12,900	700	4,110	4,520	3.2	18.8	20.7	2.85
	020	020	020	020	050	1,900	1,900	1,900	1,900	4,890	3,000	12,500	14,500	700	3,950	4,870	3.2	18.1	22.3	3.16
	020	020	020	020	068	1,880	1,880	1,880	1,880	6,460	3,000	14,000	14,950	700	4,840	5,090	3.2	22.2	23.3	2.89
	020	020	020	025	025	2,050	2,050	2,050	2,640	2,640	3,000	11,430	12,570	700	4,090	4,500	3.2	18.7	20.6	2.79
	020	020	020	025	035	2,050	2,050	2,050	2,640	3,520	3,000	12,310	13,540	700	4,140	4,550	3.2	18.9	20.8	2.97
	020	020	020	025	050	1,970	1,970	1,970	2,530	5,060	3,000	13,500	14,670	700	4,430	4,980	3.2	20.3	22.8	3.05
	020	020	020	025	068	1,810	1,810	1,810	2,330	6,220	3,000	14,000	15,000	700	4,840	5,390	3.2	22.2	24.7	2.89
	020	020	020	035	035	1,940	1,940	1,940	3,330	3,330	3,000	12,500	14,100	700	3,950	4,750	3.2	18.1	21.7	3.16
	020	020	020	035	050	1,920	1,920	1,920	3,290	4,940	3,000	14,000	14,900	700	4,840	5,050	3.2	22.2	23.1	2.89
	020	020	020	035	068	1,720	1,720	1,720	2,950	5,890	3,000	14,000	15,000	700	4,840	5,710	3.2	22.2	26.1	2.89
	020	020	020	050	050	1,720	1,720	1,720	4,420	4,420	3,000	14,000	15,000	700	4,840	5,710	3.2	22.2	26.1	2.89
	020	020	025	025	025	2,050	2,050	2,640	2,640	2,640	3,000	12,020	13,220	700	4,110	4,520	3.2	18.8	20.7	2.92
	020	020	025	025	035	1,990	1,990	2,560	2,560	3,410	3,000	12,500	14,100	700	3,950	4,750	3.2	18.1	21.7	3.16
	020	020	025	025	050	1,960	1,960	2,520	2,520	5,040	3,000	14,000	14,820	700	4,840	5,010	3.2	22.2	22.9	2.89
	020	020	025	025	068	1,750	1,750	2,250	2,250	6,000	3,000	14,000	15,000	700	4,840	5,710	3.2	22.2	26.1	2.89
	020	020	025	035	035	2,010	2,010	2,590	3,450	3,450	3,000	13,500	14,620	700	4,430	4,960	3.2	20.3	22.7	3.05
	020	020	025	035	050	1,850	1,850	2,380	3,170	4,750	3,000	14,000	14,990	700	4,840	5,190	3.2	22.2	23.8	2.89
	020	020	025	035	068	1,660	1,660	2,140	2,850	5,690	3,000	14,000	15,000	700	4,840	5,710	3.2	22.2	26.1	2.89
	020	020	025	050	050	1,660	1,660	2,140	4,270	4,270	3,000	14,000	15,000	700	4,840	5,710	3.2	22.2	26.1	2.89
	020	020	035	035	035	1,960	1,960	3,360	3,360	3,360	3,000	14,000	14,860	700	4,840	5,010	3.2	22.2	22.9	2.89
	020	020	035	035	050	1,750	1,750	3,000	3,000	4,500	3,000	14,000	15,000	700	4,840	5,710	3.2	22.2	26.1	2.89
	020	020	035	050	050	1,580	1,580	2,710	4,060	4,060	3,000	14,000	15,000	700	4,840	5,710	3.2	22.2	26.1	2.89
	020	025	025	025	025	2,030	2,620	2,620	2,620	2,620	3,000	12,500	13,860	700	3,950	4,550	3.2	18.1	20.8	3.16
	020	025	025	025	035	1,980	2,540	2,540	2,540	3,390	3,000	13,000	14,560	700	4,190	4,960	3.2	19.2	22.7	3.10
	020	025	025	025	050	1,880	2,420	2,420	2,420	4,850	3,000	14,000	14,970	700	4,840	5,080	3.2	22.2	23.2	2.89
	020	025	025	025	068	1,690	2,170	2,170	2,170	5,790	3,000	14,000	15,000	700	4,840	5,710	3.2	22.2	26.1	2.89
	020	025	025	035	035	2,000	2,570	2,570	3,430	3,430	3,000	14,000	14,770	700	4,840	4,990	3.2	22.2	22.8	2.89
	020	025	025	035	050	1,780	2,290	2,290	3,050	4,580	3,000	14,000	15,000	700	4,840	5,710	3.2	22.2	26.1	2.89
	020	025	025	035	068	1,610	2,070	2,070	2,750	5,510	3,000	14,000	15,000	700	4,840	5,710	3.2	22.2	26.1	2.89
	020	025	025	050	050	1,610	2,070	2,070	4,130	4,130	3,000	14,000	15,000	700	4,840	5,710	3.2	22.2	26.1	2.89
	020	025	035	035	035	1,880	2,420	3,230	3,230	3,230	3,000	14,000	14,980	700	4,840	5,080	3.2	22.2	23.2	2.89
	020	025	035	035	050	1,690	2,170	2,900	2,900	4,340	3,000	14,000	15,000	700	4,840	5,710	3.2	22.2	26.1	2.89
	020	035	035	035	035	1,780	3,050	3,050	3,050	3,050	3,000	14,000	15,000	700	4,840	5,710	3.2	22.2	26.1	2.89

4. Combination Table

4-7 AJ140TXJ5KH/EA

COOLING

Unit	Indoor Unit					Cooling Capacity (W)					Capacity			Power Consumption			Current			EER
	A	B	C	D	E	A	B	C	D	E	W			W			A			W/W
											MIN	Rated	MAX	MIN	Rated	MAX	MIN	Rated	MAX	Rated
5	020	035	035	035	050	1,610	2,750	2,750	2,750	4,130	3,000	14,000	15,000	700	4,840	5,710	3.2	22.2	26.1	2.89
	025	025	025	025	025	2,500	2,500	2,500	2,500	2,500	3,000	12,500	14,500	700	3,950	4,870	3.2	18.1	22.3	3.16
	025	025	025	025	035	2,530	2,530	2,530	2,530	3,380	3,000	13,500	14,720	700	4,430	4,970	3.2	20.3	22.7	3.05
	025	025	025	025	050	2,330	2,330	2,330	2,330	4,670	3,000	14,000	15,000	700	4,840	5,190	3.2	22.2	23.8	2.89
	025	025	025	025	068	2,100	2,100	2,100	2,100	5,600	3,000	14,000	15,000	700	4,840	5,710	3.2	22.2	26.1	2.89
	025	025	025	035	035	2,470	2,470	2,470	3,290	3,290	3,000	14,000	14,930	700	4,840	5,040	3.2	22.2	23.1	2.89
	025	025	025	035	050	2,210	2,210	2,210	2,950	4,420	3,000	14,000	15,000	700	4,840	5,710	3.2	22.2	26.1	2.89
	025	025	025	050	050	2,000	2,000	2,000	4,000	4,000	3,000	14,000	15,000	700	4,840	5,710	3.2	22.2	26.1	2.89
	025	025	035	035	035	2,330	2,330	3,110	3,110	3,110	3,000	14,000	15,000	700	4,840	5,390	3.2	22.2	24.7	2.89
	025	025	035	035	050	2,100	2,100	2,800	2,800	4,200	3,000	14,000	15,000	700	4,840	5,710	3.2	22.2	26.1	2.89
	025	035	035	035	035	2,210	2,950	2,950	2,950	2,950	3,000	14,000	15,000	700	4,840	5,710	3.2	22.2	26.1	2.89
	035	035	035	035	035	2,800	2,800	2,800	2,800	2,800	3,000	14,000	15,000	700	4,840	5,710	3.2	22.2	26.1	2.89

HEATING

Unit	Indoor Unit					Heating Capacity (W)					Capacity			Power Consumption			Current			EER
	A	B	C	D	E	A	B	C	D	E	W			W			A			W/W
											MIN	Rated	MAX	MIN	Rated	MAX	MIN	Rated	MAX	Rated
1	020					2,200					2,200	2,200	2,500	690	1,150	1,250	3.2	5.3	5.7	1.91
	025					3,200					2,230	3,200	3,500	690	1,410	1,520	3.2	6.5	7.0	2.27
	035					4,000					2,230	4,000	4,400	690	1,660	1,800	3.2	7.6	8.2	2.41
	050					6,000					2,230	6,000	6,400	690	2,180	2,360	3.2	10.0	10.8	2.75
	068					8,000					2,230	8,000	8,400	690	3,200	3,470	3.2	14.6	15.9	2.50
2	020	020				2,200	2,200				2,230	4,400	5,890	450	1,400	2,300	2.1	6.4	10.5	3.14
	020	025				2,360	3,030				2,230	5,390	6,860	450	1,690	2,600	2.1	7.7	11.9	3.19
	020	035				2,320	3,980				2,230	6,300	7,620	450	1,850	2,900	2.1	8.5	13.3	3.41
	020	050				2,260	5,800				2,230	8,060	12,690	450	2,550	3,600	2.1	11.7	16.5	3.16
	020	068				2,180	7,490				2,230	9,670	15,040	450	3,050	4,200	2.1	14.0	19.2	3.17
	025	025				3,200	3,200				2,230	6,390	7,830	450	1,890	3,000	2.1	8.6	13.7	3.38
	025	035				3,130	4,170				2,230	7,300	8,590	450	2,060	3,300	2.1	9.4	15.1	3.54
	025	050				3,020	6,040				2,230	9,060	13,860	450	2,760	3,900	2.1	12.6	17.8	3.28
	025	068				2,910	7,760				2,230	10,670	14,100	450	3,260	4,250	2.1	14.9	19.5	3.27
	035	035				4,110	4,110				2,230	8,210	9,380	450	2,220	3,500	2.1	10.2	16.0	3.70
	035	050				3,980	5,980				2,230	9,960	14,800	450	2,990	4,200	2.1	13.7	19.2	3.33
	035	068				3,860	7,720				2,230	11,580	14,100	450	3,430	4,200	2.1	15.7	19.2	3.38
	050	050				5,860	5,860				2,230	11,720	14,100	450	3,440	4,200	2.1	15.7	19.2	3.41
	050	068				5,140	6,850				2,230	11,990	14,770	450	3,380	4,400	2.1	15.5	20.1	3.55
	068	068				6,500	6,500				2,230	13,000	15,060	450	3,410	4,650	2.1	15.6	21.3	3.81
3	020	020	020			2,150	2,150	2,150			2,230	6,450	9,730	450	2,030	2,900	2.1	9.3	13.3	3.18
	020	020	025			2,190	2,190	2,820			2,230	7,210	10,900	450	2,240	3,200	2.1	10.3	14.6	3.22
	020	020	035			2,300	2,300	3,950			2,230	8,560	12,920	450	2,600	3,700	2.1	11.9	16.9	3.29
	020	020	050			2,210	2,210	5,690			2,230	10,110	14,100	450	3,110	4,250	2.1	14.2	19.5	3.25
	020	020	068			2,060	2,060	7,050			2,230	11,170	14,500	450	3,410	4,250	2.1	15.6	19.5	3.28
	020	025	025			2,440	3,130	3,130			2,230	8,700	13,160	450	2,650	3,700	2.1	12.1	16.9	3.28
	020	025	035			2,330	3,000	3,990			2,230	9,320	14,100	450	2,810	4,000	2.1	12.9	18.3	3.32
	020	025	050			2,240	2,880	5,750			2,230	10,870	14,100	450	3,320	4,200	2.1	15.2	19.2	3.27

4. Combination Table

4-7 AJ140TXJ5KH/EA

HEATING

Unit	Indoor Unit					Heating Capacity (W)					Capacity			Power Consumption			Current			EER
	A	B	C	D	E	A	B	C	D	E	W			W			A			W/W
											MIN	Rated	MAX	MIN	Rated	MAX	MIN	Rated	MAX	Rated
3	020	025	068			2,070	2,660	7,100			2,230	11,840	14,600	450	3,340	4,300	2.1	15.3	19.7	3.54
	020	035	035			2,240	3,850	3,850			2,230	9,940	14,100	450	3,050	4,150	2.1	14.0	19.0	3.26
	020	035	050			2,270	3,900	5,850			2,230	12,020	14,500	450	3,370	4,250	2.1	15.4	19.5	3.57
	020	035	068			1,950	3,340	6,680			2,230	11,960	14,740	450	3,370	4,400	2.1	15.4	20.1	3.55
	020	050	050			1,940	4,980	4,980			2,230	11,900	14,650	450	3,360	4,400	2.1	15.4	20.1	3.54
	020	050	068			1,860	4,780	6,370			2,230	13,000	15,090	450	3,410	4,690	2.1	15.6	21.5	3.81
	020	068	068			1,650	5,670	5,670			2,230	13,000	15,500	450	3,410	4,810	2.1	15.6	22.0	3.81
	025	025	025			3,160	3,160	3,160			2,230	9,470	14,330	450	2,860	4,000	2.1	13.1	18.3	3.31
	025	025	035			3,030	3,030	4,040			2,230	10,110	14,100	450	3,090	4,150	2.1	14.1	19.0	3.27
	025	025	050			2,790	2,790	5,590			2,230	11,170	14,100	450	3,400	4,200	2.1	15.6	19.2	3.29
	025	025	068			2,570	2,570	6,850			2,230	11,990	14,770	450	3,380	4,400	2.1	15.5	20.1	3.55
	025	035	035			2,930	3,900	3,900			2,230	10,730	14,100	450	3,260	4,250	2.1	14.9	19.5	3.29
	025	035	050			2,730	3,630	5,450			2,230	11,810	14,540	450	3,320	4,300	2.1	15.2	19.7	3.56
	025	035	068			2,430	3,230	6,470			2,230	12,130	14,950	450	3,410	4,400	2.1	15.6	20.1	3.56
	025	050	050			2,430	4,850	4,850			2,230	12,130	14,950	450	3,420	4,500	2.1	15.7	20.6	3.55
	025	050	068			2,290	4,590	6,120			2,230	13,000	15,300	450	3,410	4,740	2.1	15.6	21.7	3.81
	025	068	068			2,050	5,470	5,470			2,230	13,000	15,710	450	3,410	4,860	2.1	15.6	22.2	3.81
	035	035	035			3,780	3,780	3,780			2,230	11,340	14,100	450	3,430	4,200	2.1	15.7	19.2	3.31
	035	035	050			3,410	3,410	5,110			2,230	11,930	14,710	450	3,350	4,400	2.1	15.3	20.1	3.56
	035	035	068			3,250	3,250	6,500			2,230	13,000	15,060	450	3,410	4,650	2.1	15.6	21.3	3.81
	035	050	050			3,250	4,880	4,880			2,230	13,000	15,060	450	3,410	4,660	2.1	15.6	21.3	3.81
	035	050	068			2,890	4,330	5,780			2,230	13,000	15,470	450	3,410	4,780	2.1	15.6	21.9	3.81
	035	068	068			2,600	5,200	5,200			2,230	13,000	15,800	450	3,410	4,860	2.1	15.6	22.2	3.81
	050	050	050			4,330	4,330	4,330			2,230	13,000	15,470	450	3,410	4,790	2.1	15.6	21.9	3.81
	050	050	068			3,900	3,900	5,200			2,230	13,000	15,800	450	3,410	4,860	2.1	15.6	22.2	3.81
4	020	020	020	020		2,320	2,320	2,320	2,320		3,400	9,260	11,400	550	2,630	3,500	2.5	12.0	16.0	3.52
	020	020	020	025		2,350	2,350	2,350	3,020		3,400	10,080	12,430	550	2,900	3,800	2.5	13.3	17.4	3.48
	020	020	020	035		2,280	2,280	2,280	3,900		3,400	10,730	13,220	550	3,060	4,000	2.5	14.0	18.3	3.51
	020	020	020	050		2,210	2,210	2,210	5,680		3,400	12,310	14,680	550	3,270	4,600	2.5	15.0	21.1	3.76
	020	020	020	068		1,960	1,960	1,960	6,740		3,400	12,630	15,090	550	3,360	4,700	2.5	15.4	21.5	3.76
	020	020	025	025		2,380	2,380	3,060	3,060		3,400	10,870	13,420	550	3,100	4,000	2.5	14.2	18.3	3.51
	020	020	025	035		2,310	2,310	2,970	3,960		3,400	11,550	14,210	550	3,270	4,200	2.5	15.0	19.2	3.53
	020	020	025	050		2,130	2,130	2,740	5,480		3,400	12,490	14,890	550	3,310	4,600	2.5	15.1	21.1	3.77
	020	020	025	068		1,910	1,910	2,450	6,540		3,400	12,810	15,300	550	3,400	4,700	2.5	15.6	21.5	3.77
	020	020	035	035		2,260	2,260	3,880	3,880		3,400	12,280	14,650	550	3,240	4,500	2.5	14.8	20.6	3.79
	020	020	035	050		2,000	2,000	3,440	5,150		3,400	12,600	15,060	550	3,340	4,700	2.5	15.3	21.5	3.77
	020	020	035	068		1,820	1,820	3,120	6,240		3,400	13,000	15,150	550	3,410	4,710	2.5	15.6	21.6	3.81
	020	020	050	050		1,820	1,820	4,680	4,680		3,400	13,000	15,150	550	3,410	4,720	2.5	15.6	21.6	3.81
	020	020	050	068		1,860	1,860	4,790	6,390		3,400	14,910	15,800	550	4,270	4,860	2.5	19.5	22.2	3.49
	020	025	025	025		2,410	3,090	3,090	3,090		3,400	11,690	14,420	550	3,310	4,300	2.5	15.1	19.7	3.53
	020	025	025	035		2,210	2,840	2,840	3,790		3,400	11,690	14,420	550	3,310	4,300	2.5	15.1	19.7	3.53
	020	025	025	050		2,060	2,640	2,640	5,290		3,400	12,630	15,090	550	3,350	4,700	2.5	15.3	21.5	3.77
	020	025	025	068		1,860	2,390	2,390	6,370		3,400	13,000	15,180	550	3,410	4,720	2.5	15.6	21.6	3.81
	020	025	035	035		2,180	2,800	3,730	3,730		3,400	12,430	14,860	550	3,290	4,600	2.5	15.1	21.1	3.78
	020	025	035	050		1,940	2,500	3,330	5,000		3,400	12,780	15,270	550	3,380	4,700	2.5	15.5	21.5	3.78

4. Combination Table

4-7 AJ140TXJ5KH/EA

HEATING

Unit	Indoor Unit					Heating Capacity (W)					Capacity			Power Consumption			Current			EER
	A	B	C	D	E	A	B	C	D	E	W			W			A			W/W
											MIN	Rated	MAX	MIN	Rated	MAX	MIN	Rated	MAX	Rated
4	020	025	035	068		1,850	2,380	3,170	6,350		3,400	13,750	15,800	550	3,600	4,860	2.5	16.5	22.2	3.82
	020	025	050	050		1,880	2,420	4,830	4,830		3,400	13,960	15,800	550	3,720	4,860	2.5	17.0	22.2	3.75
	020	025	050	068		1,810	2,330	4,660	6,210		3,400	15,000	15,800	550	4,320	4,860	2.5	19.8	22.2	3.47
	020	035	035	035		2,050	3,510	3,510	3,510		3,400	12,570	15,010	550	3,320	4,600	2.5	15.2	21.1	3.79
	020	035	035	050		1,860	3,180	3,180	4,780		3,400	13,000	15,090	550	3,410	4,690	2.5	15.6	21.5	3.81
	020	035	035	068		1,870	3,210	3,210	6,420		3,400	14,710	15,800	550	4,150	4,860	2.5	19.0	22.2	3.54
	020	035	050	050		1,880	3,230	4,850	4,850		3,400	14,810	15,800	550	4,210	4,860	2.5	19.3	22.2	3.52
	020	035	050	068		1,720	2,950	4,430	5,900		3,400	15,000	15,800	550	4,320	4,860	2.5	19.8	22.2	3.47
	020	050	050	050		1,720	4,430	4,430	4,430		3,400	15,000	15,800	550	4,320	4,860	2.5	19.8	22.2	3.47
	025	025	025	025		2,930	2,930	2,930	2,930		3,400	11,720	14,450	550	3,310	4,300	2.5	15.1	19.7	3.54
	025	025	025	035		2,880	2,880	2,880	3,840		3,400	12,490	14,890	550	3,290	4,600	2.5	15.1	21.1	3.80
	025	025	025	050		2,560	2,560	2,560	5,120		3,400	12,810	15,300	550	3,390	4,700	2.5	15.5	21.5	3.78
	025	025	025	068		2,380	2,380	2,380	6,350		3,400	13,500	15,800	550	3,460	4,860	2.5	15.8	22.2	3.90
	025	025	035	035		2,700	2,700	3,600	3,600		3,400	12,600	15,060	550	3,320	4,700	2.5	15.2	21.5	3.80
	025	025	035	050		2,440	2,440	3,250	4,880		3,400	13,000	15,150	550	3,410	4,700	2.5	15.6	21.5	3.81
	025	025	035	068		2,370	2,370	3,160	6,320		3,400	14,220	15,800	550	3,870	4,860	2.5	17.7	22.2	3.67
	025	025	050	050		2,400	2,400	4,810	4,810		3,400	14,420	15,800	550	3,980	4,860	2.5	18.2	22.2	3.62
	025	025	050	068		2,250	2,250	4,500	6,000		3,400	15,000	15,800	550	4,320	4,860	2.5	19.8	22.2	3.47
	025	035	035	035		2,550	3,400	3,400	3,400		3,400	12,750	15,210	550	3,350	4,700	2.5	15.3	21.5	3.81
	025	035	035	050		2,380	3,180	3,180	4,760		3,400	13,500	15,800	550	3,460	4,860	2.5	15.8	22.2	3.90
	025	035	035	068		2,370	3,160	3,160	6,320		3,400	15,000	15,800	550	4,320	4,860	2.5	19.8	22.2	3.47
	025	035	050	050		2,370	3,160	4,740	4,740		3,400	15,000	15,800	550	4,320	4,860	2.5	19.8	22.2	3.47
	025	050	050	050		2,140	4,290	4,290	4,290		3,400	15,000	15,800	550	4,320	4,860	2.5	19.8	22.2	3.47
	035	035	035	035		3,250	3,250	3,250	3,250		3,400	13,000	15,060	550	3,410	4,650	2.5	15.6	21.3	3.81
	035	035	035	050		3,240	3,240	3,240	4,860		3,400	14,570	15,800	550	4,070	4,860	2.5	18.6	22.2	3.58
	035	035	035	068		3,000	3,000	3,000	6,000		3,400	15,000	15,800	550	4,320	4,860	2.5	19.8	22.2	3.47
	035	035	050	050		3,000	3,000	4,500	4,500		3,400	15,000	15,800	550	4,320	4,860	2.5	19.8	22.2	3.47
5	020	020	020	020	020	2,200	2,200	2,200	2,200	2,200	3,400	11,000	13,630	550	3,170	4,100	2.5	14.5	18.8	3.47
	020	020	020	020	025	2,270	2,270	2,270	2,270	2,920	3,400	12,000	14,620	550	3,380	4,400	2.5	15.5	20.1	3.55
	020	020	020	020	035	2,240	2,240	2,240	2,240	3,840	3,400	12,800	14,450	550	3,340	4,300	2.5	15.3	19.7	3.83
	020	020	020	020	050	2,050	2,050	2,050	2,050	5,280	3,400	13,500	15,800	550	3,460	4,860	2.5	15.8	22.2	3.90
	020	020	020	020	068	2,000	2,000	2,000	2,000	6,840	3,400	14,830	15,800	550	4,190	4,860	2.5	19.2	22.2	3.54
	020	020	020	025	025	2,330	2,330	2,330	3,000	3,000	3,400	13,000	14,770	550	3,300	4,600	2.5	15.1	21.1	3.94
	020	020	020	025	035	2,250	2,250	2,250	2,890	3,860	3,400	13,500	15,800	550	3,460	4,860	2.5	15.8	22.2	3.90
	020	020	020	025	050	2,040	2,040	2,040	2,630	5,250	3,400	14,010	15,800	550	3,730	4,860	2.5	17.1	22.2	3.76
	020	020	020	025	068	1,940	1,940	1,940	2,500	6,670	3,400	15,000	15,800	550	4,280	4,860	2.5	19.6	22.2	3.50
	020	020	020	035	035	2,100	2,100	2,100	3,600	3,600	3,400	13,500	15,800	550	3,460	4,860	2.5	15.8	22.2	3.90
	020	020	020	035	050	2,010	2,010	2,010	3,450	5,170	3,400	14,660	15,800	550	4,090	4,860	2.5	18.7	22.2	3.58
	020	020	020	035	068	1,840	1,840	1,840	3,160	6,320	3,400	15,000	15,800	550	4,280	4,860	2.5	19.6	22.2	3.50
	020	020	020	050	050	1,840	1,840	1,840	4,740	4,740	3,400	15,000	15,800	550	4,280	4,860	2.5	19.6	22.2	3.50
	020	020	025	025	025	2,300	2,300	2,960	2,960	2,960	3,400	13,500	15,800	550	3,460	4,860	2.5	15.8	22.2	3.90
	020	020	025	025	035	2,150	2,150	2,760	2,760	3,680	3,400	13,500	15,800	550	3,460	4,860	2.5	15.8	22.2	3.90
	020	020	025	025	050	2,020	2,020	2,600	2,600	5,190	3,400	14,430	15,800	550	3,970	4,860	2.5	18.2	22.2	3.63
	020	020	025	025	068	1,880	1,880	2,410	2,410	6,430	3,400	15,000	15,800	550	4,280	4,860	2.5	19.6	22.2	3.50
	020	020	025	035	035	2,060	2,060	2,650	3,530	3,530	3,400	13,840	15,800	550	3,640	4,860	2.5	16.7	22.2	3.80

4. Combination Table

4-7 AJ140TXJ5KH/EA

HEATING

Unit	Indoor Unit					Heating Capacity (W)					Capacity			Power Consumption			Current			EER
	A	B	C	D	E	A	B	C	D	E	W			W			A			W/W
											MIN	Rated	MAX	MIN	Rated	MAX	MIN	Rated	MAX	Rated
	020	020	025	035	050	1,980	1,980	2,540	3,390	5,080	3,400	14,970	15,800	550	4,260	4,860	2.5	19.5	22.2	3.51
	020	020	025	035	068	1,780	1,780	2,290	3,050	6,100	3,400	15,000	15,800	550	4,280	4,860	2.5	19.6	22.2	3.50
	020	020	025	050	050	1,780	1,780	2,290	4,580	4,580	3,400	15,000	15,800	550	4,280	4,860	2.5	19.6	22.2	3.50
	020	020	035	035	035	2,040	2,040	3,490	3,490	3,490	3,400	14,540	15,800	550	4,030	4,860	2.5	18.4	22.2	3.61
	020	020	035	035	050	1,880	1,880	3,210	3,210	4,820	3,400	15,000	15,800	550	4,280	4,860	2.5	19.6	22.2	3.50
	020	020	035	050	050	1,690	1,690	2,900	4,350	4,350	3,400	15,000	15,800	550	4,280	4,860	2.5	19.6	22.2	3.50
	020	025	025	025	025	2,200	2,830	2,830	2,830	2,830	3,400	13,500	15,800	550	3,460	4,860	2.5	15.8	22.2	3.90
	020	025	025	025	035	2,080	2,670	2,670	2,670	3,570	3,400	13,670	15,800	550	3,550	4,860	2.5	16.2	22.2	3.85
	020	025	025	025	050	2,000	2,580	2,580	2,580	5,150	3,400	14,890	15,800	550	4,220	4,860	2.5	19.3	22.2	3.53
	020	025	025	025	068	1,810	2,330	2,330	2,330	6,210	3,400	15,000	15,800	550	4,280	4,860	2.5	19.6	22.2	3.50
	020	025	025	035	035	2,040	2,620	2,620	3,500	3,500	3,400	14,290	15,800	550	3,890	4,860	2.5	17.8	22.2	3.67
	020	025	025	035	050	1,910	2,450	2,450	3,270	4,910	3,400	15,000	15,800	550	4,280	4,860	2.5	19.6	22.2	3.50
	020	025	025	035	068	1,720	2,210	2,210	2,950	5,900	3,400	15,000	15,800	550	4,280	4,860	2.5	19.6	22.2	3.50
	020	025	025	050	050	1,720	2,210	2,210	4,430	4,430	3,400	15,000	15,800	550	4,280	4,860	2.5	19.6	22.2	3.50
5	020	025	035	035	035	2,010	2,580	3,450	3,450	3,450	3,400	14,930	15,800	550	4,240	4,860	2.5	19.4	22.2	3.52
	020	025	035	035	050	1,810	2,330	3,100	3,100	4,660	3,400	15,000	15,800	550	4,280	4,860	2.5	19.6	22.2	3.50
	020	035	035	035	035	1,910	3,270	3,270	3,270	3,270	3,400	15,000	15,800	550	4,280	4,860	2.5	19.6	22.2	3.50
	020	035	035	035	050	1,720	2,950	2,950	2,950	4,430	3,400	15,000	15,800	550	4,280	4,860	2.5	19.6	22.2	3.50
	025	025	025	025	025	2,700	2,700	2,700	2,700	2,700	3,400	13,500	15,800	550	3,460	4,860	2.5	15.8	22.2	3.90
	025	025	025	025	035	2,650	2,650	2,650	2,650	3,540	3,400	14,150	15,800	550	3,810	4,860	2.5	17.4	22.2	3.71
	025	025	025	025	050	2,500	2,500	2,500	2,500	5,000	3,400	15,000	15,800	550	4,280	4,860	2.5	19.6	22.2	3.50
	025	025	025	025	068	2,250	2,250	2,250	2,250	6,000	3,400	15,000	15,800	550	4,280	4,860	2.5	19.6	22.2	3.50
	025	025	025	035	035	2,600	2,600	2,600	3,470	3,470	3,400	14,750	15,800	550	4,140	4,860	2.5	18.9	22.2	3.56
	025	025	025	035	050	2,370	2,370	2,370	3,160	4,740	3,400	15,000	15,800	550	4,280	4,860	2.5	19.6	22.2	3.50
	025	025	025	050	050	2,140	2,140	2,140	4,290	4,290	3,400	15,000	15,800	550	4,280	4,860	2.5	19.6	22.2	3.50
	025	025	035	035	035	2,500	2,500	3,330	3,330	3,330	3,400	15,000	15,800	550	4,280	4,860	2.5	19.6	22.2	3.50
	025	025	035	035	050	2,250	2,250	3,000	3,000	4,500	3,400	15,000	15,800	550	4,280	4,860	2.5	19.6	22.2	3.50
	025	035	035	035	035	2,370	3,160	3,160	3,160	3,160	3,400	15,000	15,800	550	4,280	4,860	2.5	19.6	22.2	3.50
	035	035	035	035	035	3,000	3,000	3,000	3,000	3,000	3,400	15,000	15,800	550	4,280	4,860	2.5	19.6	22.2	3.50

NOTE

1 Cooling capacity is based on 27°CDB / 19°CWB (indoor temperature), 35°CDB (outdoor temperature).

2 Heating capacity is based on 20°CDB (indoor temperature), 7°CDB/6°CWB (outdoor temperature).

3 The above is the value for connecting with the following indoor units.
- AJ***TNAPKH : Premium Wind Free

4 You can not connect a single unit.

5 Power consumption include indoor unit power.

5. Dimensional Drawing

5-1. Outdoor units

- AJ040TXJ2KH/EA, AJ050TXJ2KH/EA

Unit : mm [inches]

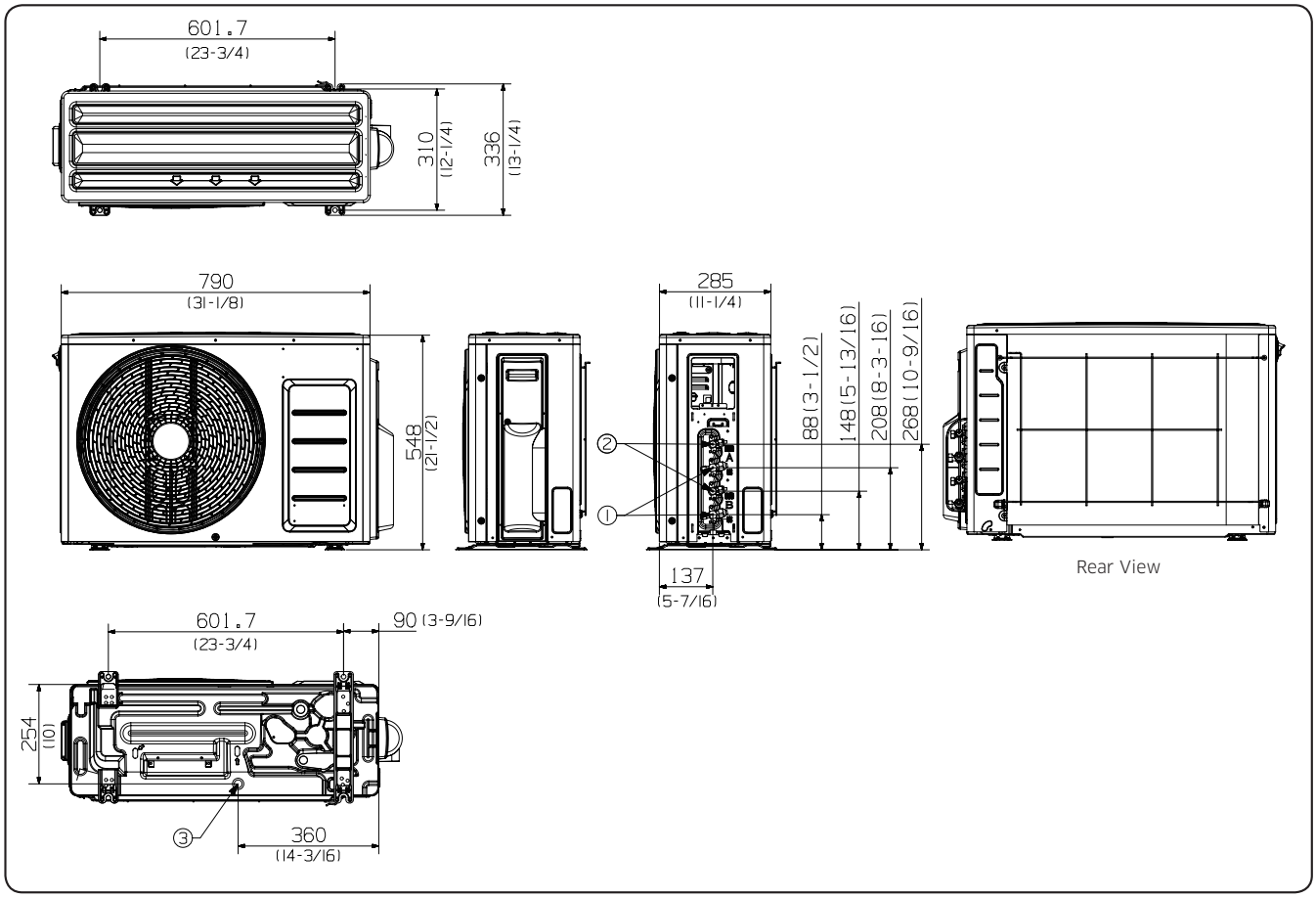

NO	Name	Description
1	Refrigerant gas pipe	Φ9.52 (Φ3/8) X 2EA
2	Refrigerant liquid pipe	Φ6.35 (Φ1/4) X 2EA
3	Drain hole	Connection with the provided drain plug.

5. Dimensional Drawing

5-1. Outdoor units

- AJ068TXJ3KH/EA

Unit : mm [inches]

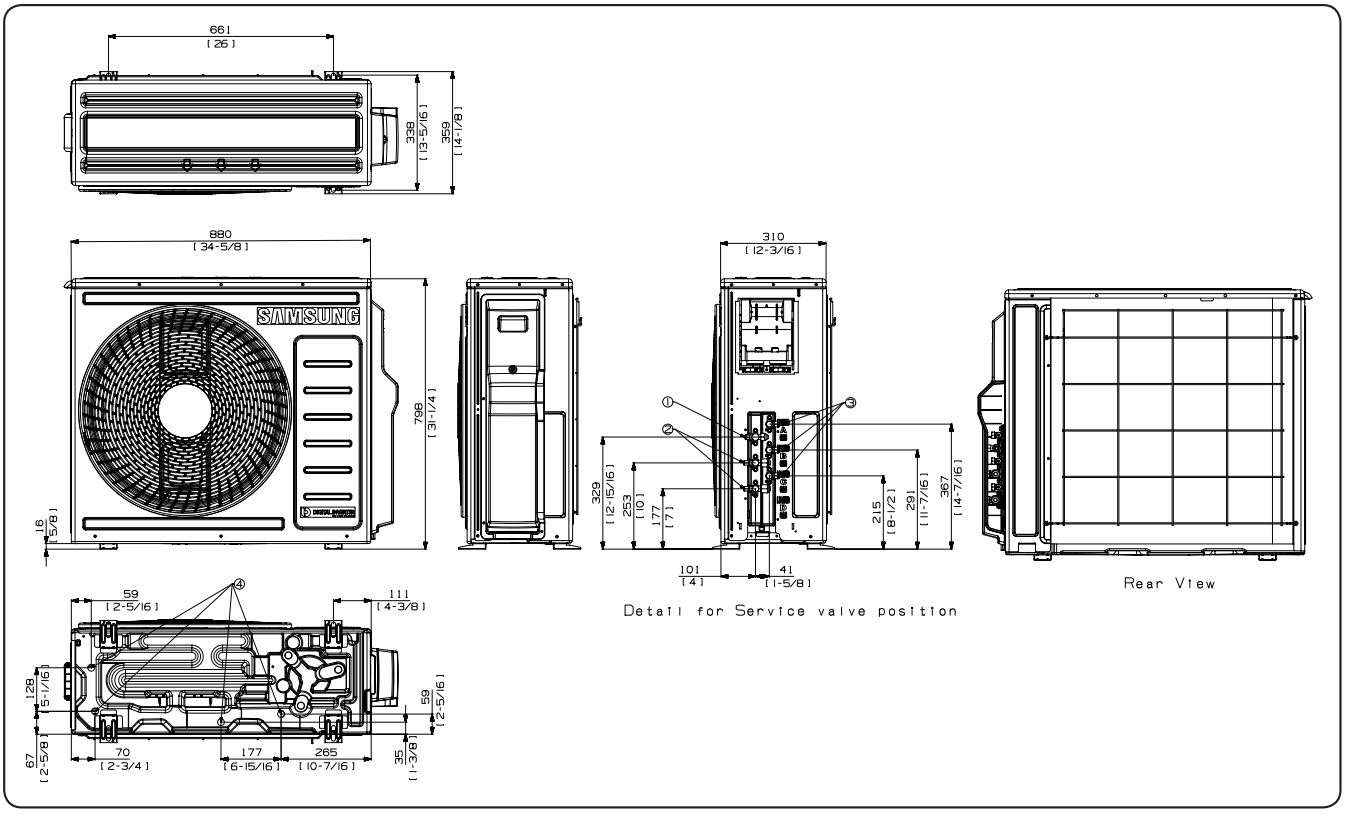

NO	Name	Description
1	Refrigerant gas pipe	Φ9.52 (Φ3/8) x 1 EA
2		Φ12.7 (Φ1/2) x 2 EA
3	Refrigerant liquid pipe	Φ6.35 (Φ1/4) X 3 EA
4	Drain hole	Connection with the provided drain plug.

5. Dimensional Drawing

5-1. Outdoor units

- AJ080TXJ4KH/EA

Unit : mm [inches]

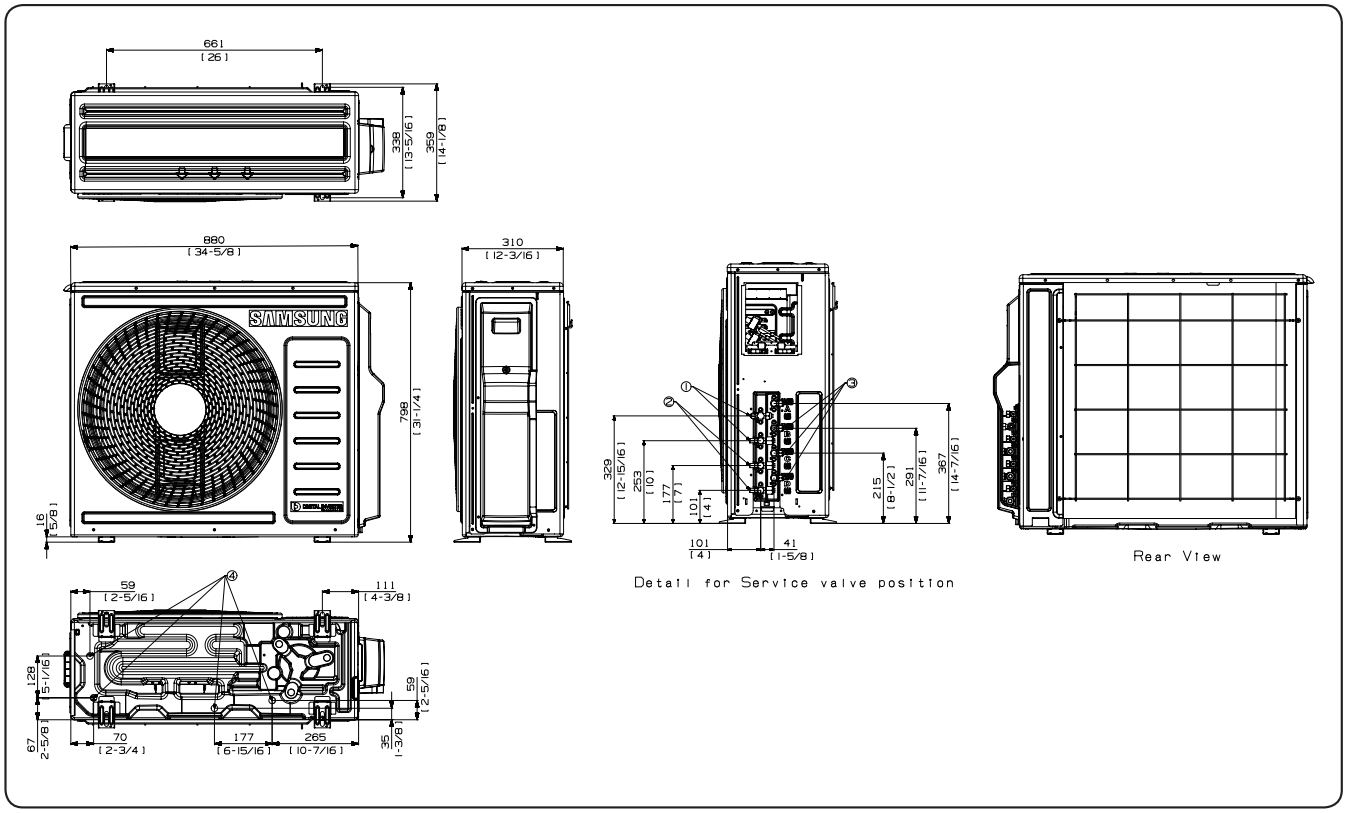

NO	Name	Description
1	Refrigerant gas pipe	Φ9.52 (Φ3/8) x 2 EA
2		Φ12.7 (Φ1/2) x 2 EA
3	Refrigerant liquid pipe	Φ6.35 (Φ1/4) X 4 EA
4	Drain hole	Connection with the provided drain plug.

5. Dimensional Drawing

5-1. Outdoor units

- AJ100TXJ5KH/EA

Unit : mm [inches]

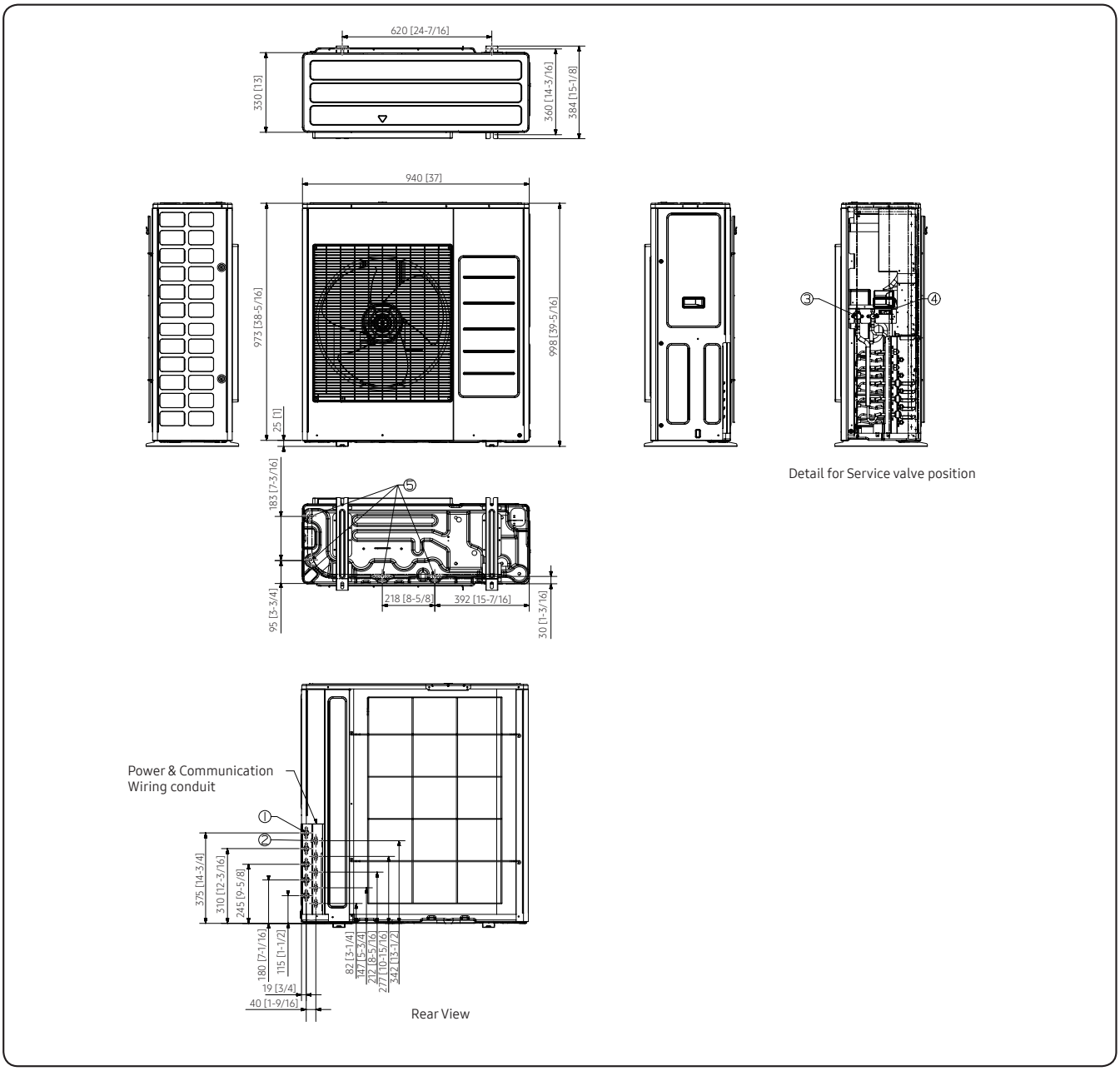

NO	Name	Description
1	Refrigerant gas pipe	Φ9.52 (Φ3/8) x 2EA, Φ12.7 (Φ1/2) x 3EA
2	Refrigerant liquid pipe	Φ6.35 (Φ1/4) x 5EA
3	Service vlave (gas)	5/8
4	Service vlave (liquid)	3/8
5	Drain hole	Connection with the provided drain plug.

5. Dimensional Drawing

5-1. Outdoor units

- AJ125TXJ5KH/EA, AJ140TXJ5KH/EA

Unit : mm [inches]

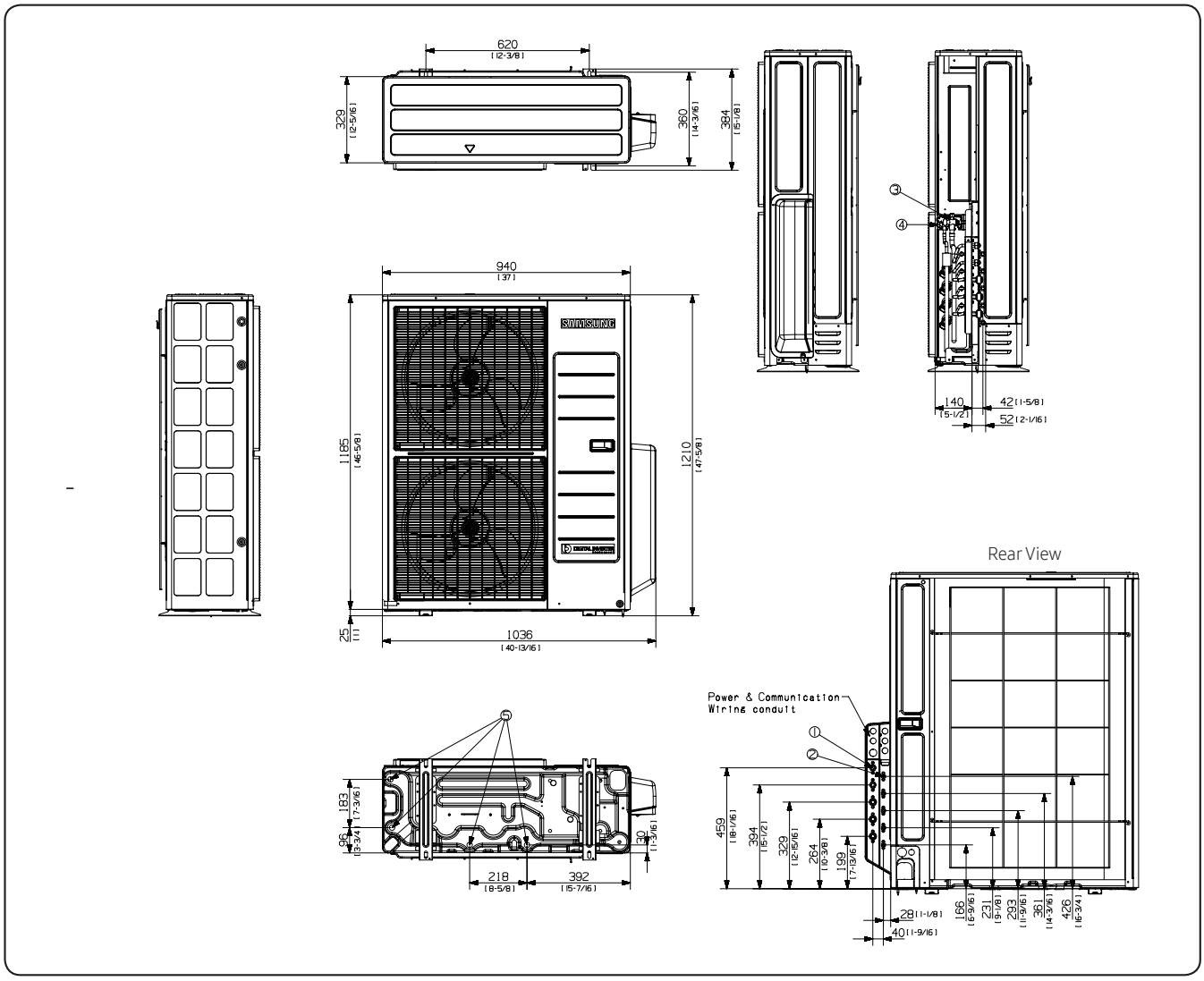

NO	Name	Description
1	Refrigerant gas pipe	Φ9.52 (Φ3/8) x 2 EA, Φ12.7 (Φ1/2) x 3 EA
2	Refrigerant liquid pipe	Φ6.35 (Φ1/4) X 45EA
3	Service valve (gas)	5/8 “
4	Service valve (liquid)	3/8 “
5	Drain hole	Connection with the provided drain plug.

5. Dimensional Drawing

5-2. Indoor unit

1 AR5500 : AJ020TNTDKH/EA, AJ025TNTDKH/EA, AJ035TNTDKH/EA
AJ025TNTDKH/AR, AJ035TNTDKH/AR

Unit : mm [inches]

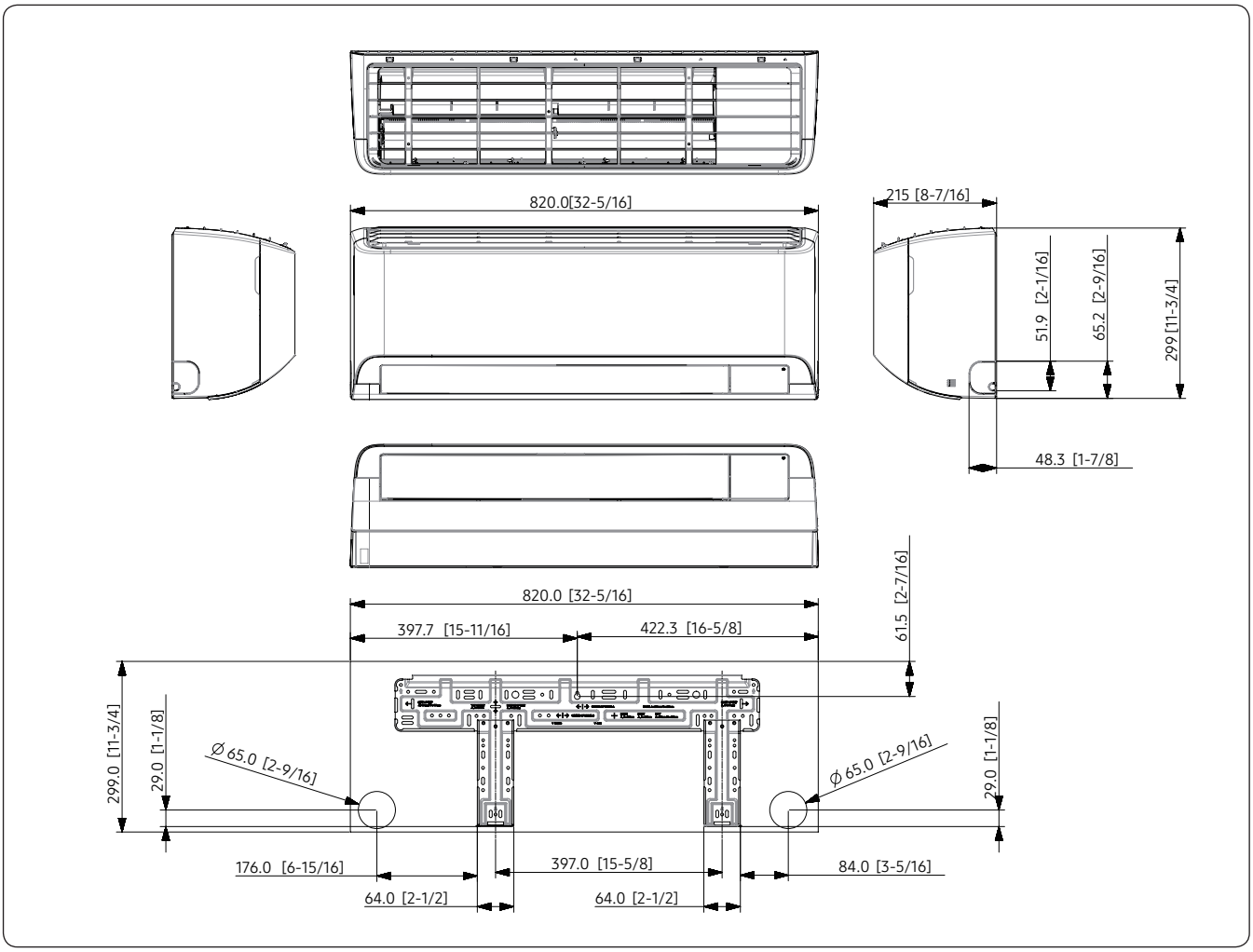

5. Dimensional Drawing

5-2. Indoor unit

2 AR9500 : AJ020TNAPKH/EA, AJ025TNAPKH/EA, AJ035TNAPKH/EA
AJ020TNAPKH/TK, AJ025TNAPKH/TK, AJ035TNAPKH/TK

Units : mm [inches]

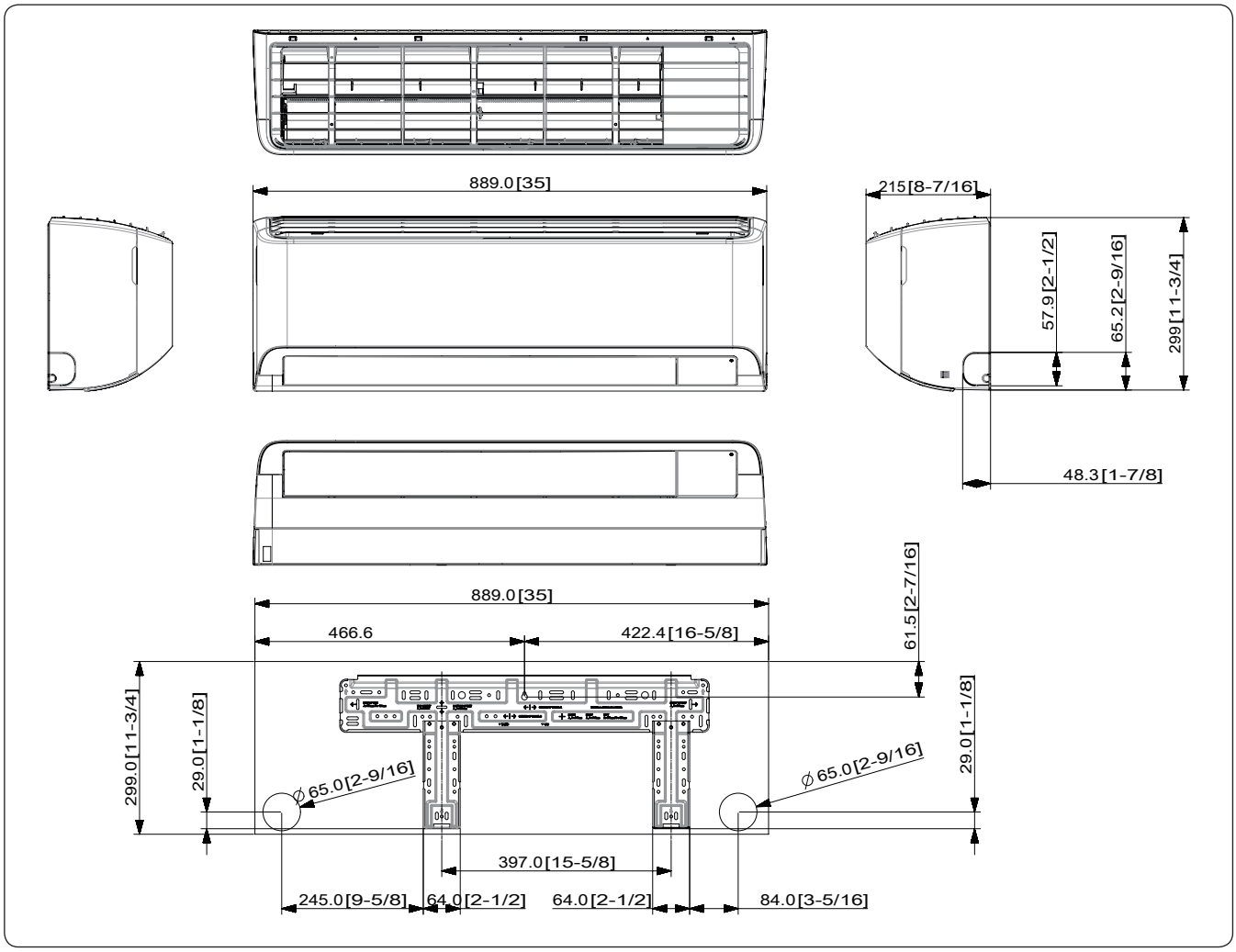

5. Dimensional Drawing

5-2. Indoor unit

3 AR5500 : AJ050TNTDKH/EA, AJ068TNTDKH/EA, AJ050TNTDKH/AR, AJ068TNTDKH/AR
AR9500 : AJ050TNAPKH/EA, AJ068TNAPKH/EA
AJ050TNAPKH/TK, AJ068TNAPKH/TK

Units : mm [inches]

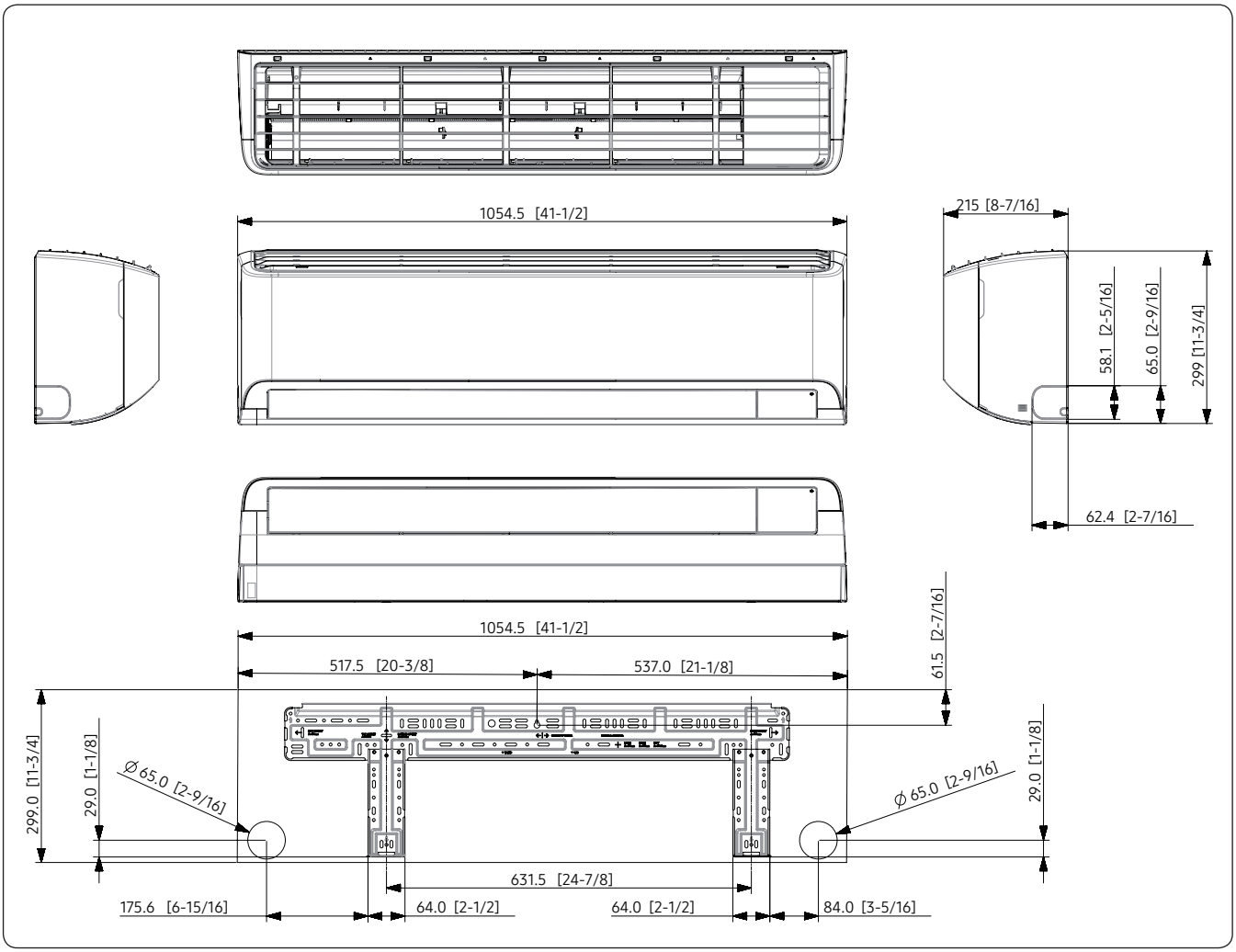

5. Dimensional Drawing

5-2. Indoor unit

4 Wind-Free 1Way Cassette : AJ026TN1DKH/EA, AJ035TN1DKH/EA

Units : mm [inches]

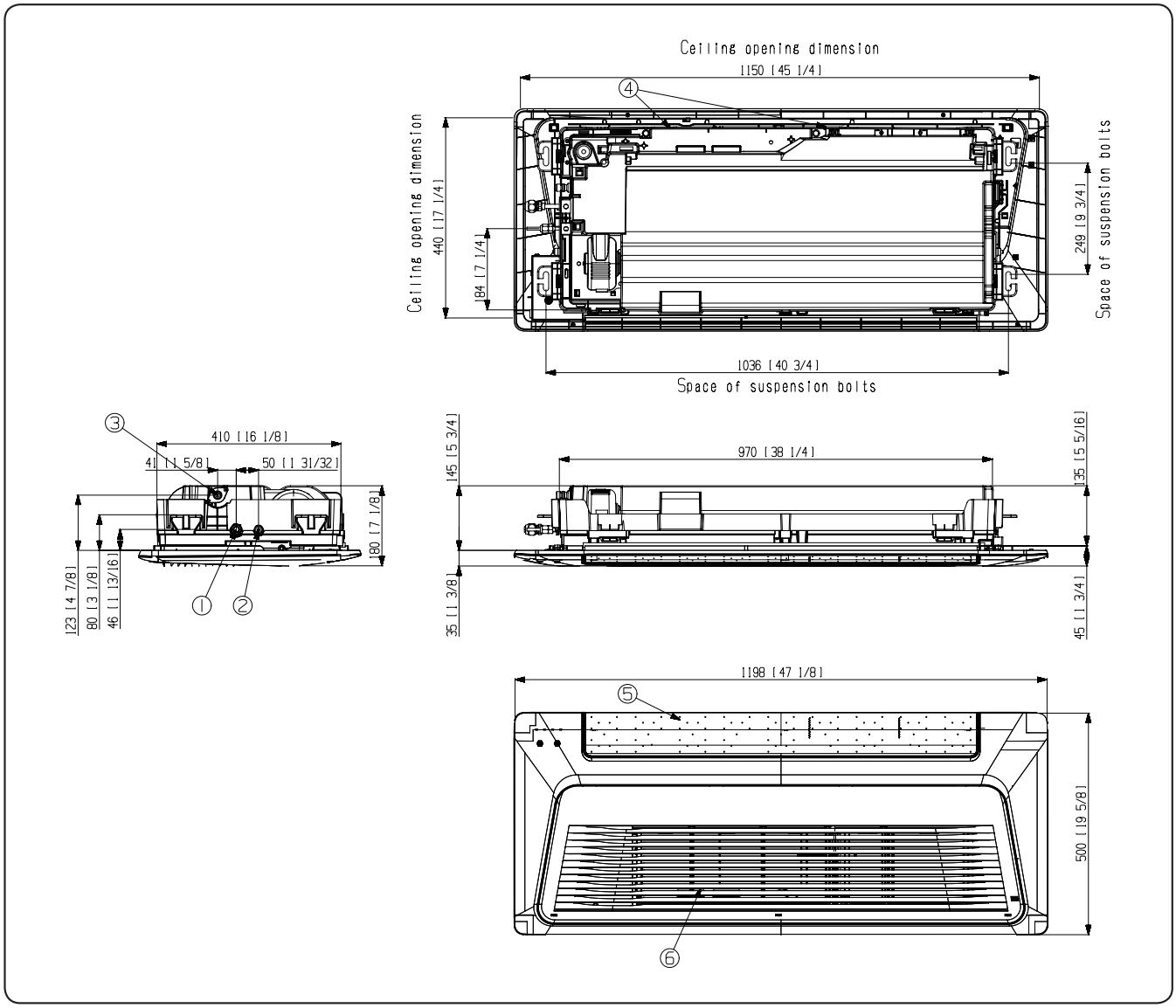

No	Name	Description	No	Name	Description
1	Gas pipe connection	Φ9.52 (3/8)	5	Air outlet louver	-
2	Liquid pipe connection	Ø6.35 (1/4)	6	Air inlet grille	-
3	Drain hose connection	VP20 (OD26, ID20)			
4	Power supply/Communication wiring conduit	-			

NOTE

- As for suspension bolt, please use M8 ~ 10. (Produced at local site)

5. Dimensional Drawing

5-2. Indoor unit

5 Wind-Free 4Way Cassette (600x600) : AJ020TNNDKH/EA, AJ026TNNDKH/EA, AJ035TNNDKH/EA, AJ052TNNDKH/EA

Units : mm [inches]

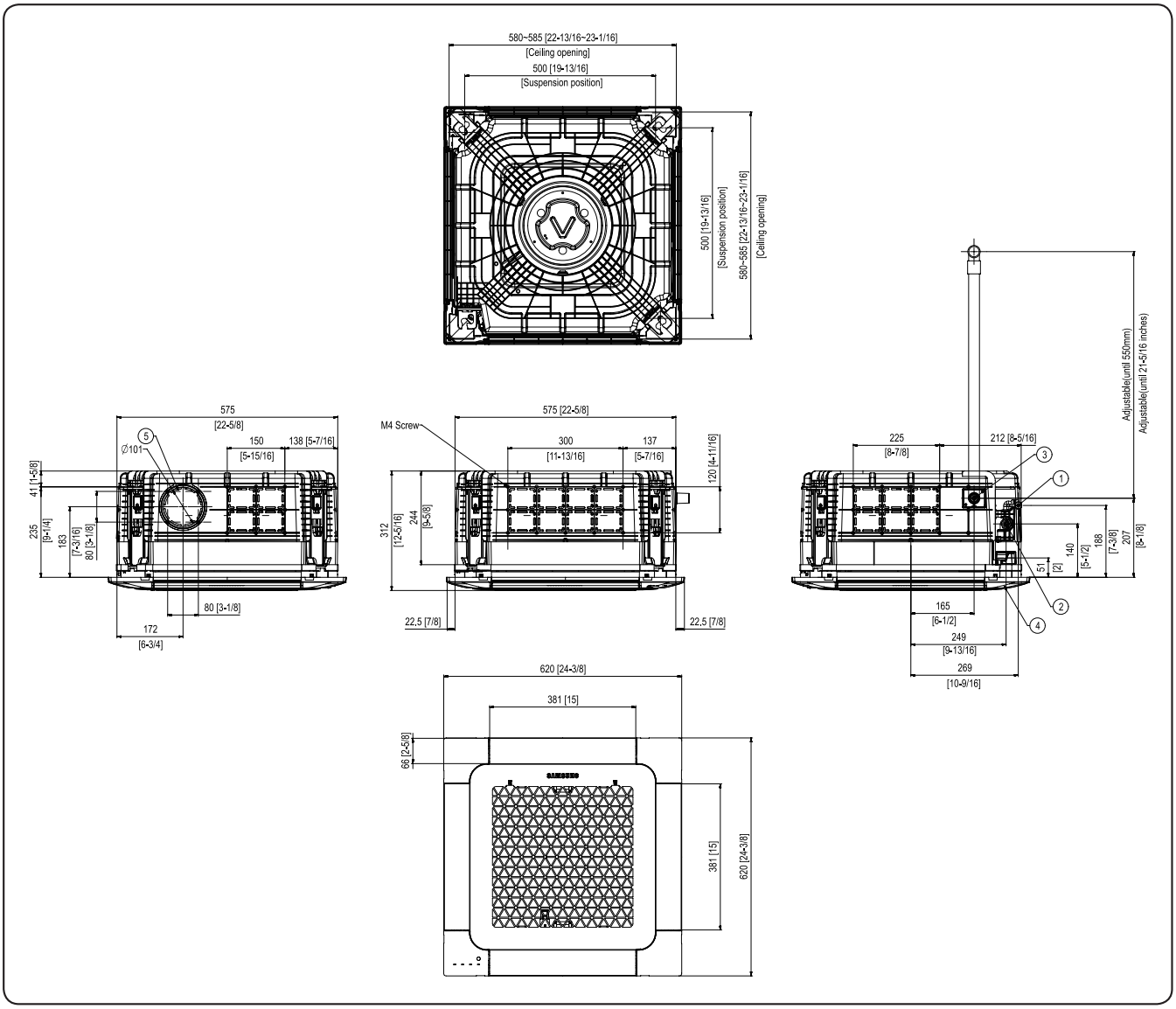

NO	Name	Description				
		1.6 kW	2.0 kW	2.6 kW	3.5 kW	5.2 kW
1	Liquid pipe connection	Φ6.35 (1/4)				
2	Gas pipe connection	Φ9.52 (3/8)				Φ12.7(1/2)
3	Drain pipe connection	VP-25 (OD 32 mm, ID 25 mm)				
4	Power & Communication wiring conduit	-				
5	Knock hole for Fresh air intake	Φ101(4), Use M4 Screw				

NOTE

- As for suspension bolt, please use M10. (Produced at local site)

5. Dimensional Drawing

5-2. Indoor unit

6 Home duct : AJ026TNLDKH/EA, AJ035TNLDKH/EA

Units : mm [inches]

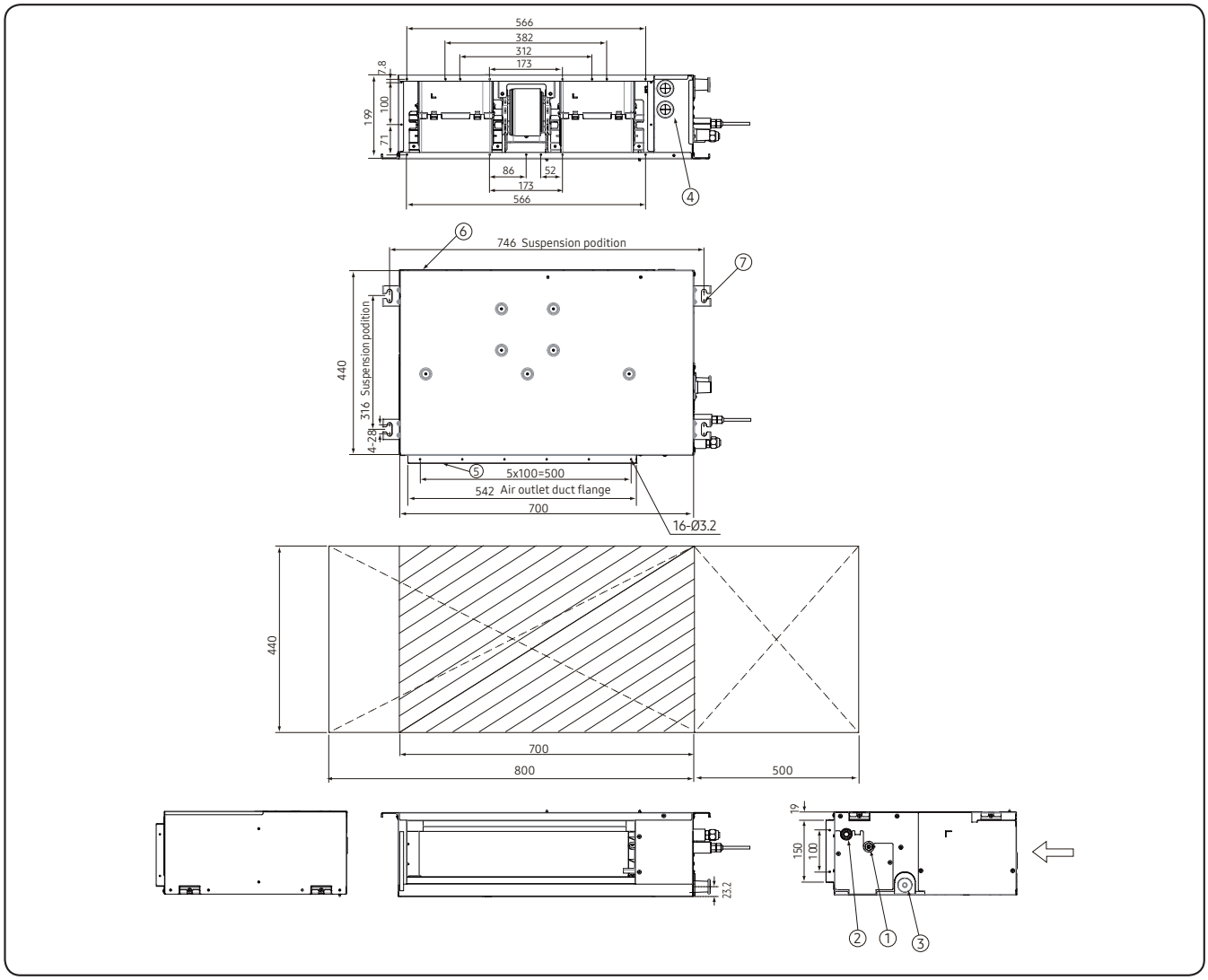

NO	Name	Description
1	Liquid pipe connection	ø6.35
2	Gas pipe connection	ø12.70
3	Drain pipe connection without drain pump	VP25 (OD ø32,ID ø25)
4	Power supply/Communication connection	-
5	Air discharge grille flange	-
6	Return air side	-
7	Hook	ø9.52 or M10

NOTE

- As for drain pipe, please use VP25 (PVC, O.D.I - 1/4 (32 mm)).
- As for suspension bolt, please use M10 or W3/8. (Produced at local site)

5. Dimensional Drawing

6 Home Duct : AJ026TNLPKH/EA, AJ035TNLPKH/EA

Units : mm [inches]

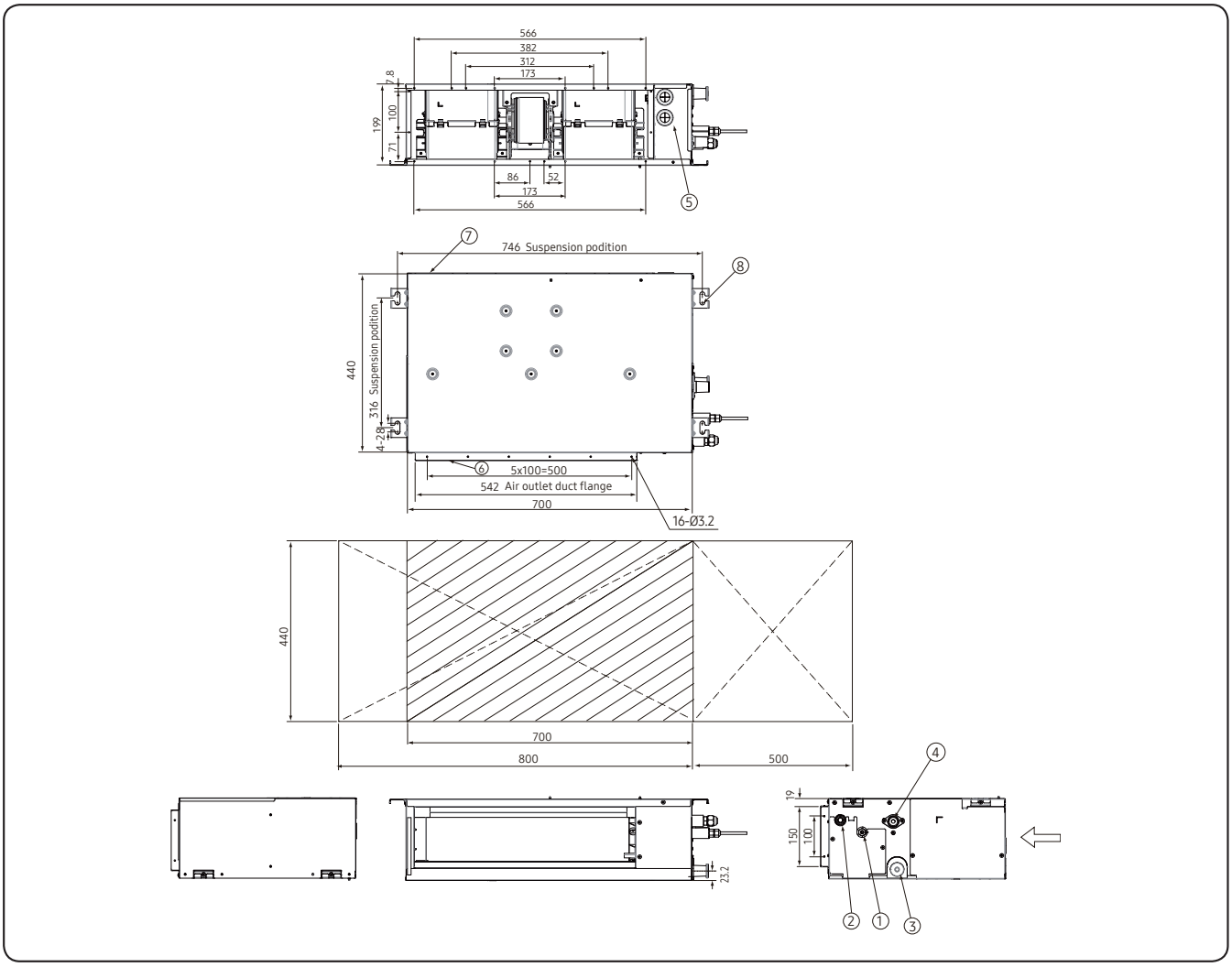

NO	Name	Description
1	Liquid pipe connection	ø6.35
2	Gas pipe connection	ø12.70
3	Drain pipe connection without drain pump	VP25 (OD ø32,ID ø25)
4	Drain pipe connection with drain pump	VP25 (OD ø32,ID ø25)
5	Power supply/Communication connection	-
6	Air discharge grille flange	-
7	Return air side	-
8	Hook	ø9.52 or M10

NOTE

- As for drain pipe, please use VP25 (PVC, O.D.I - 1/4 (32 mm)).
- As for suspension bolt, please use M10 or W3/8. (Produced at local site)

5. Dimensional Drawing

5-2. Indoor unit

6 Home Duct : AJ052TNLDKH/EA

Units : mm [inches]

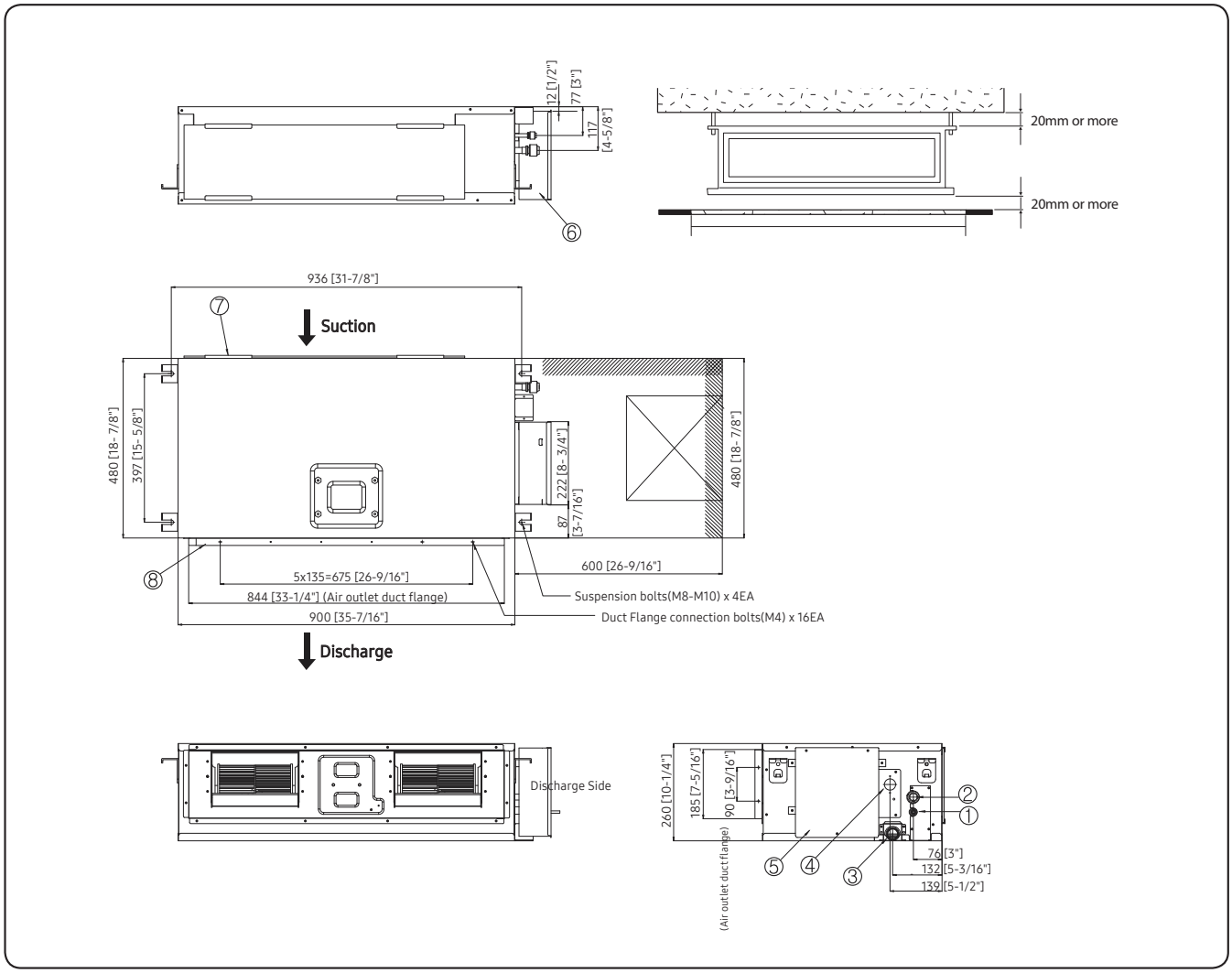

NO	Name	Description
1	Liquid pipe connection	Φ6.35 (1/4)
2	Gas pipe connection	Φ12.70(1/2)
3	Drain pipe connection	VP-25 (OD 32, ID 25)
4	Knockout hole for Drain pump	Option kit
5	Control unit	-
6	Conduit for power supply & Communication wiring	-
7	Return air side	-
8	Air outlet duct flange	-

5. Dimensional Drawing

6 Home Duct : AJ052TNLPKH/EA

Units : mm [inches]

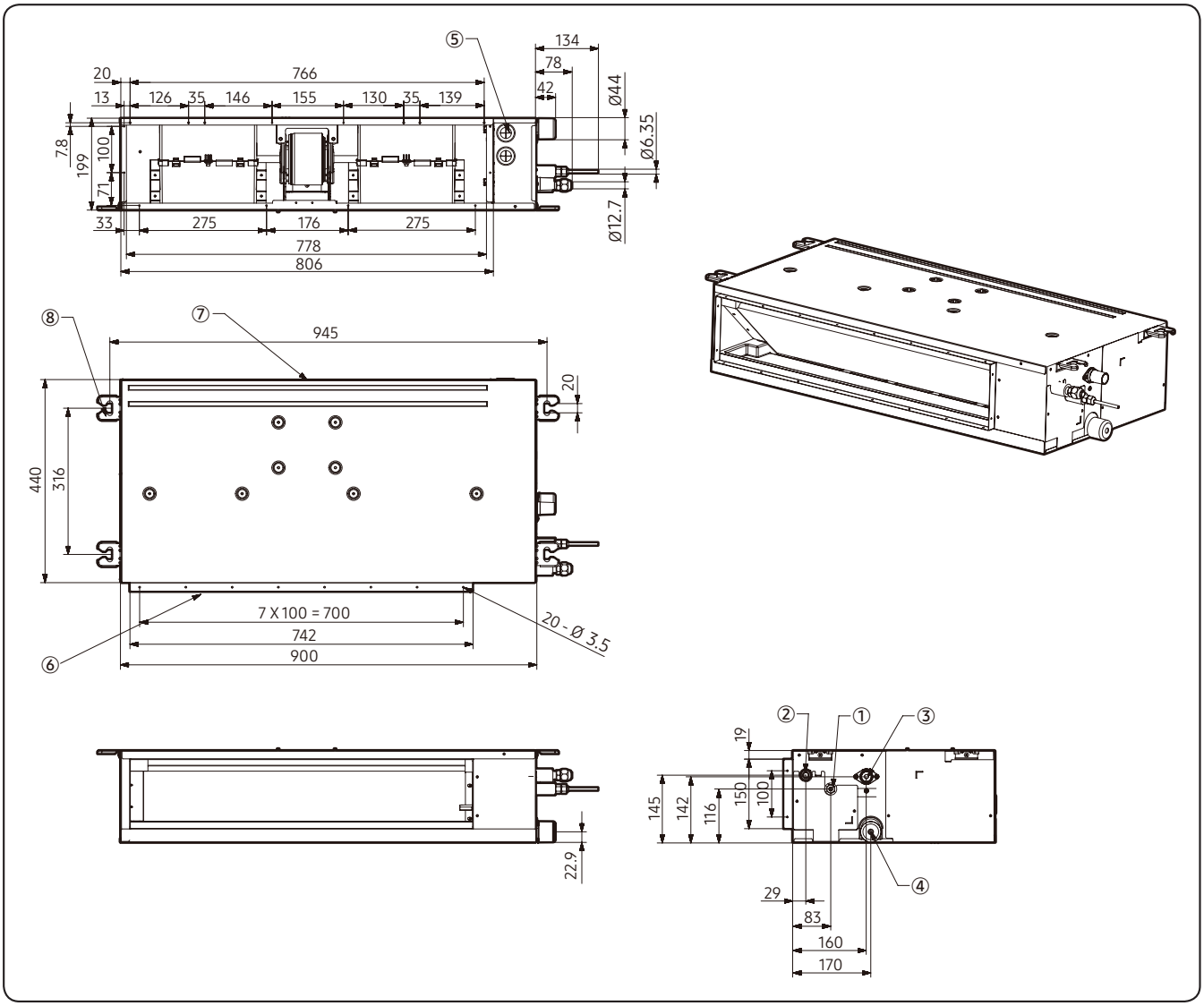

NO	Name	Description
1	Refrigerant Liquid Pipe	Ø6.35 [1/4"] Flare Connection
2	Refrigerant Gas Pipe	Φ12.70 [1/2"] Flare Connection
3	Condensate Drain	VP25 (OD 32, ID 25)
4	Condensate Drain (Option)	VP25 (OD 32, ID 25)
5	Power & Comm. Wiring Conduits	-
6	Supply Air Flange	-
7	Return Air Flange	-
8	Hook	-

5. Dimensional Drawing

5-2. Indoor unit

6 Home Duct : AJ071TNLDKH/EA

Units : mm [inches]

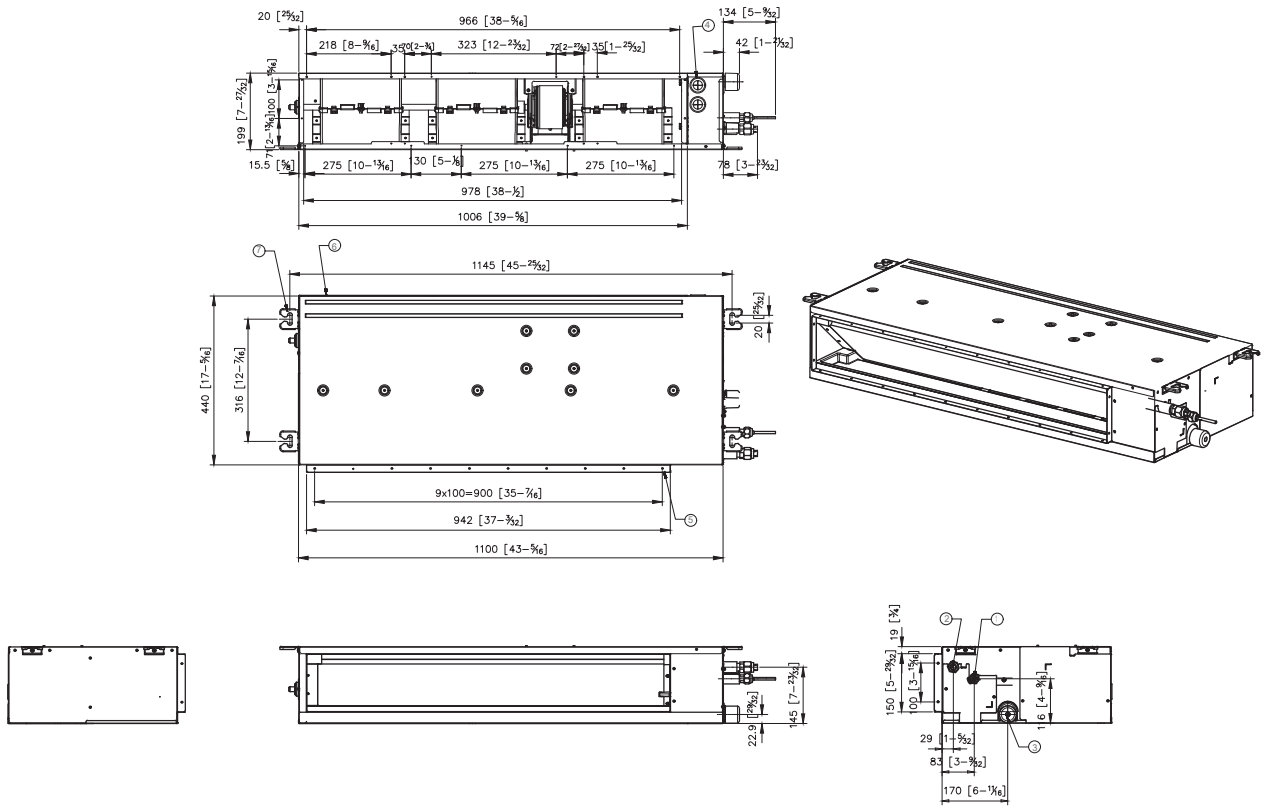

NO	Name	Description
1	Liquid pipe connection	Φ9.52(3/8")
2	Gas pipe connection	Φ15.88(5/8")
3	Drain pipe connection (Without drain pump)	OD: Φ32, ID: Φ25
4	Power supply / Communication connection	-
5	Air discharge grille flange	-
6	Return Air Side	-
7	Hook	3/8"

5. Dimensional Drawing

6 Home Duct : AJ071TNLPKH/EA

Units : mm [inches]

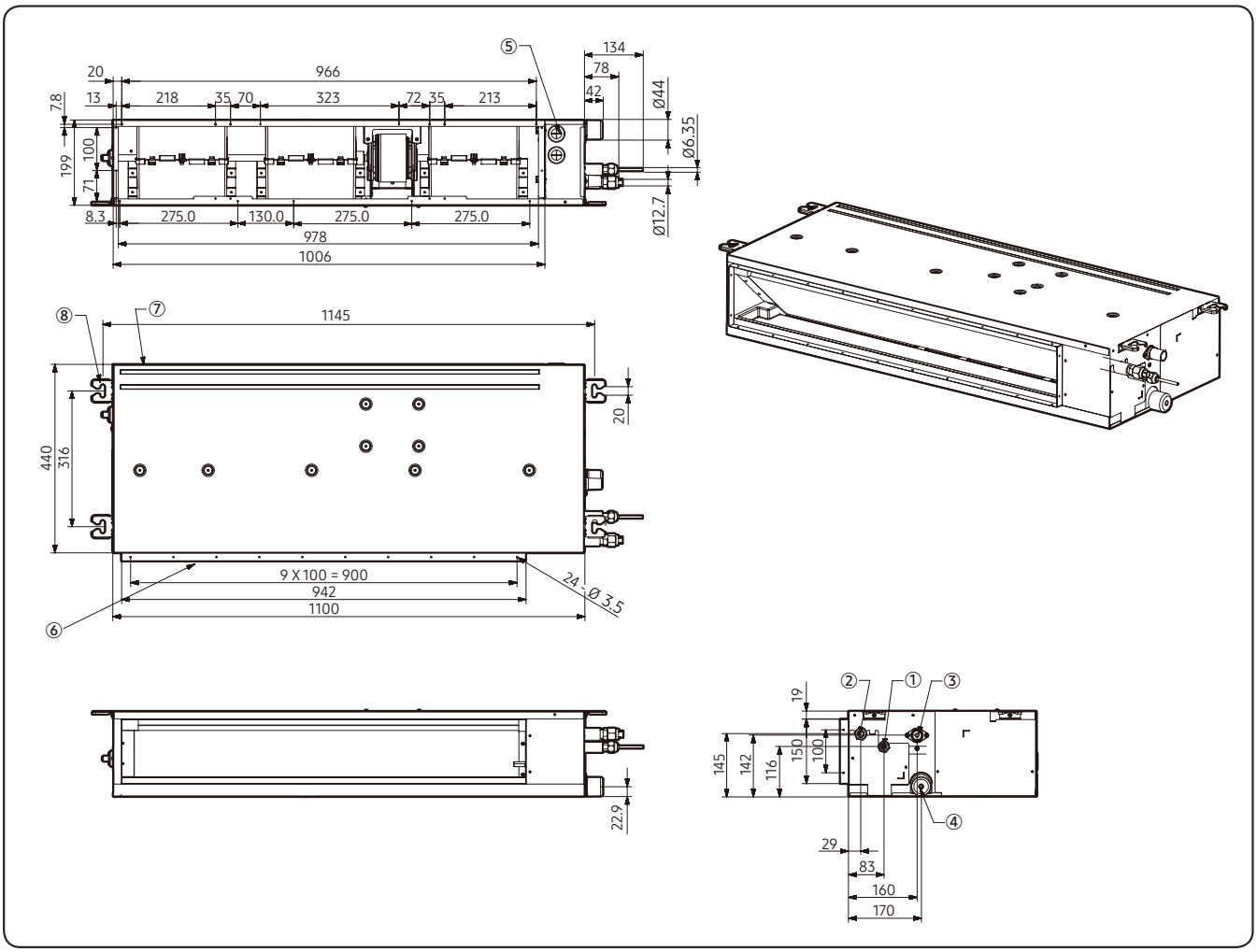

NO	Name	Description
1	Refrigerant Liquid Pipe	Ø9.52 [3/8"] Flare Connection
2	Refrigerant Gas Pipe	Ø15.88 [5/8"] Flare Connection
3	Condensate Drain	VP25 (OD 32, ID 25)
4	Condensate Drain (Option)	VP25 (OD 32, ID 25)
5	Power & Comm. Wiring Conduits	-
6	Supply Air Flange	-
7	Return Air Flange	-
8	Hook	-

6. Center of Gravity

6-1. Outdoor unit

1 AJ040TXJ2KH/EA, AJ050TXJ2KH/EA

Unit : mm

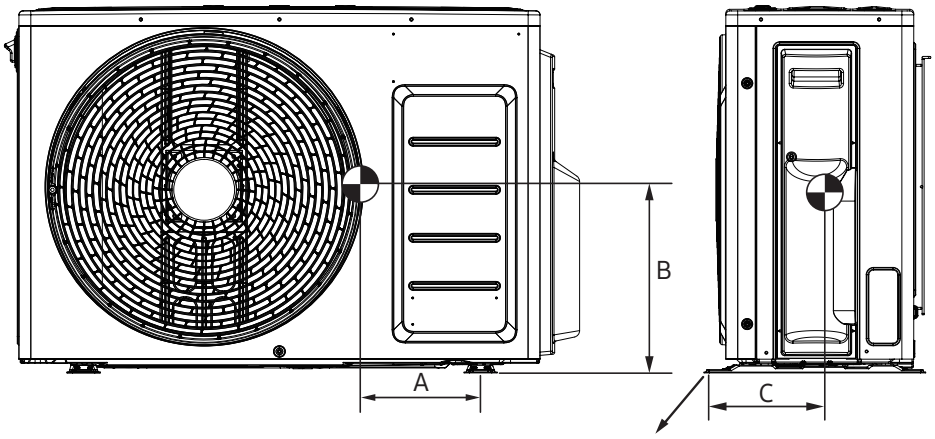

Model	A	B	C
AJ040TXJ2KH/EA AJ050TXJ2KH/EA	232	223	165

2 AJ068TXJ3KH/EA, AJ080TXJ4KH/EA

Unit : mm

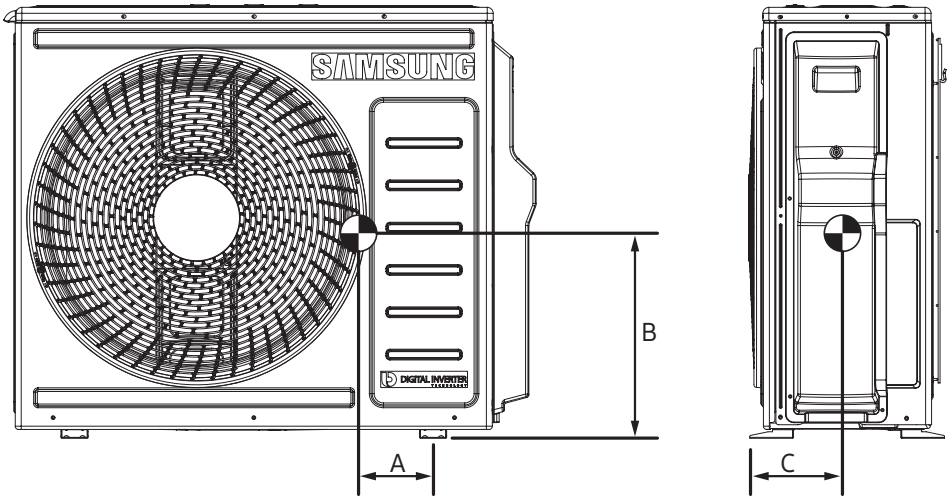

Model	A	B	C
AJ068TXJ3KH/EA AJ080TXJ4KH/EA	159	327	153

6. Center of Gravity

6-1. Outdoor unit

3 AJ100TXJ5KH/EA

Unit : mm

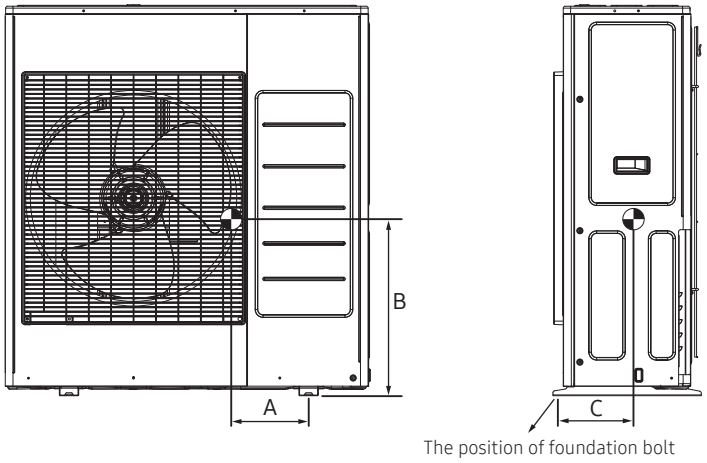

Model	A	B	C
AJ100TXJ5KH/EA	207	444	176

4 AJ125TXJ5KH/EA, AJ140TXJ5KH/EA

Unit : mm

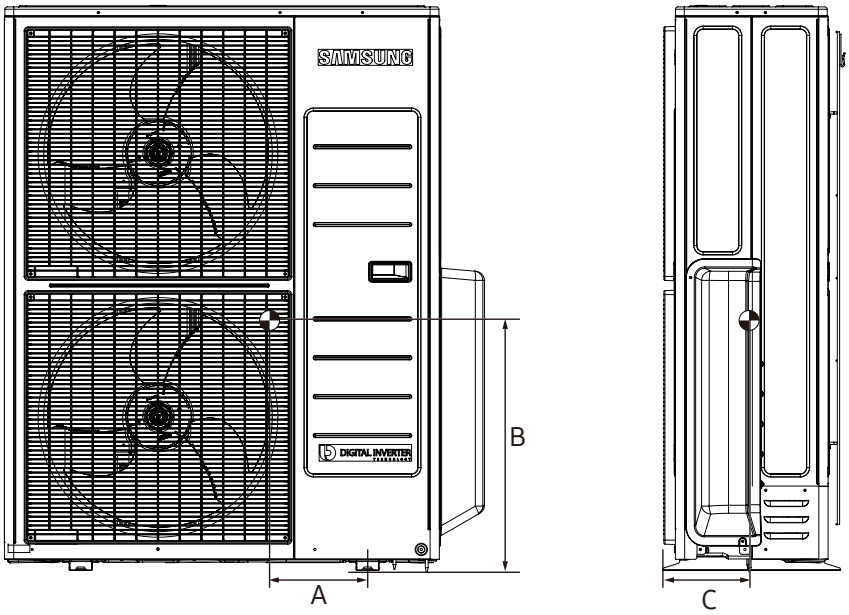

Model	A	B	C
AJ125TXJ5KH/EA AJ140TXJ5KH/EA	205	530	176

6. Center of Gravity

6-2. Indoor unit

1 AR5500 : AJ020TNTDKH/EA, AJ025TNTDKH/EA, AJ035TNTDKH/EA
AJ025TNTDKH/AR, AJ035TNTDKH/AR

Unit: mm (inches)

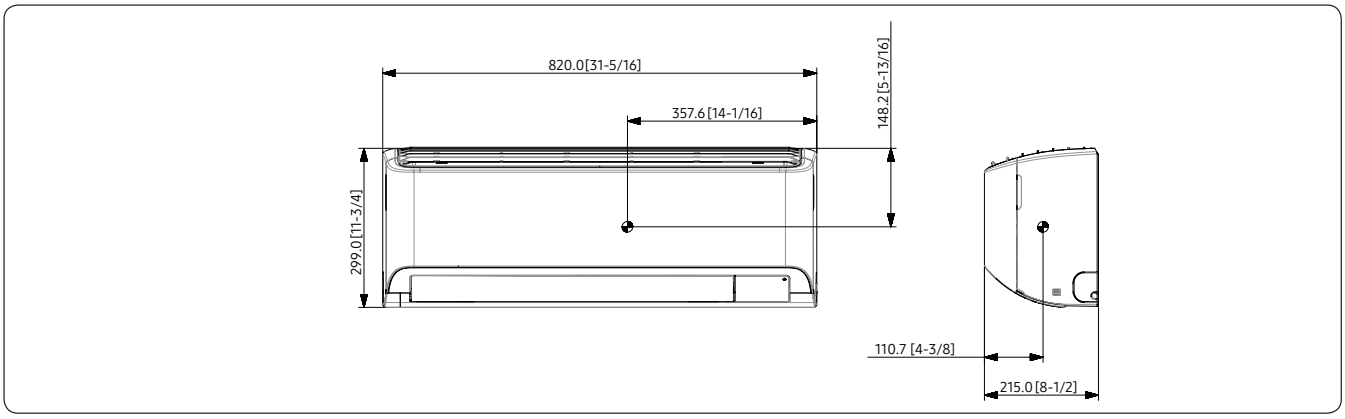

2 AR9500 : AJ020TNAPKH/EA, AJ025TNAPKH/EA, AJ035TNAPKH/EA
AJ020TNAPKH/TK, AJ025TNAPKH/TK, AJ035TNAPKH/TK

Unit: mm (inches)

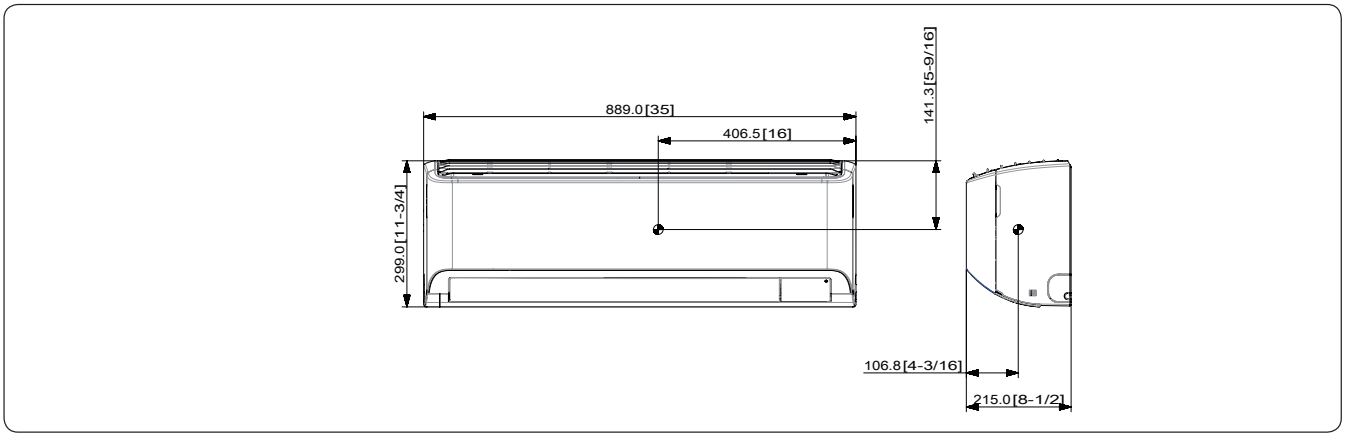

3 AR5500 : AJ050TNTDKH/EA, AJ068TNTDKH/EA, AJ050TNTDKH/AR, AJ068TNTDKH/AR
AR9500 : AJ050TNAPKH/EA, AJ068TNAPKH/EA
AJ050TNAPKH/TK, AJ068TNAPKH/TK

Unit: mm (inches)

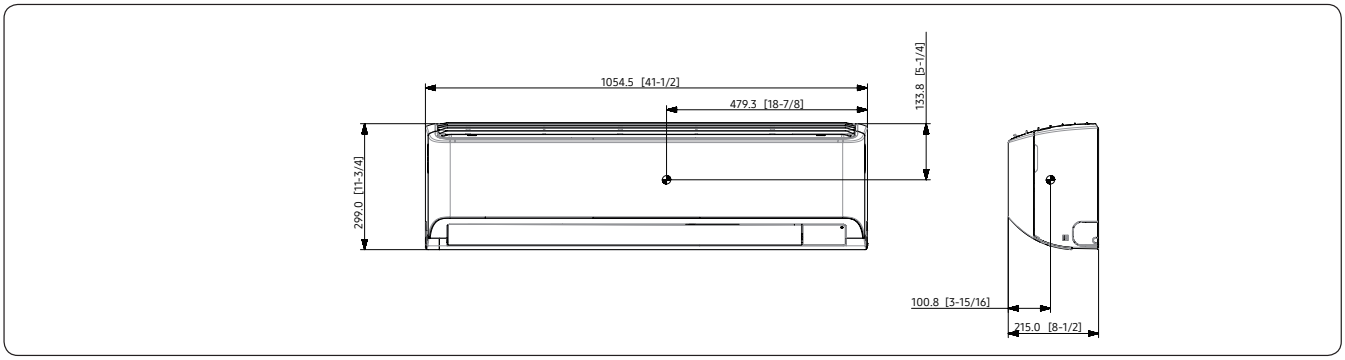

6. Center of Gravity

6-2. Indoor unit

4 Wind-Free 1Way Cassette : AJ026TN1DKH/EA, AJ035TN1DKH/EA

Unit : mm

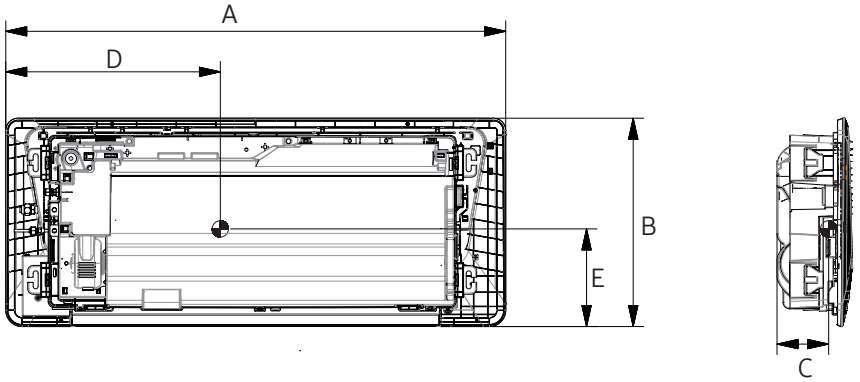

Model	A	B	C	D	E
AJ026TN1DKH/EA AJ035TN1DKH/EA	1,198	500	108	555	200

5 Wind-Free 4Way Cassette (600x600) : AJ020TNNDKH/EA, AJ026TNNDKH/EA, AJ035TNNDKH/EA, AJ052TNNDKH/EA

Unit : mm

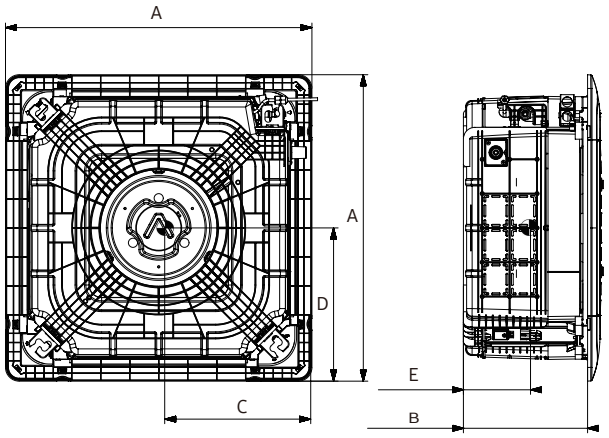

Model	A	B	C	D	E
AJ020TNNDKH/EA, AJ026TNNDKH/EA AJ035TNNDKH/EA, AJ052TNNDKH/EA	620 [24-3/8]	276 [10-14/16]	295 [11-5/8]	320 [12-5/16]	145 [5-11/16]

6. Center of Gravity

6-2. Indoor unit

6 Home duct : AJ026TNLDKH/EA, AJ035TNLDKH/EA, AJ052TNLDKH/EA, AJ071TNLDKH/EA
AJ026TNLPKH/EA, AJ035TNLPKH/EA, AJ052TNLPKH/EA, AJ071TNLPKH/EA

Unit : mm

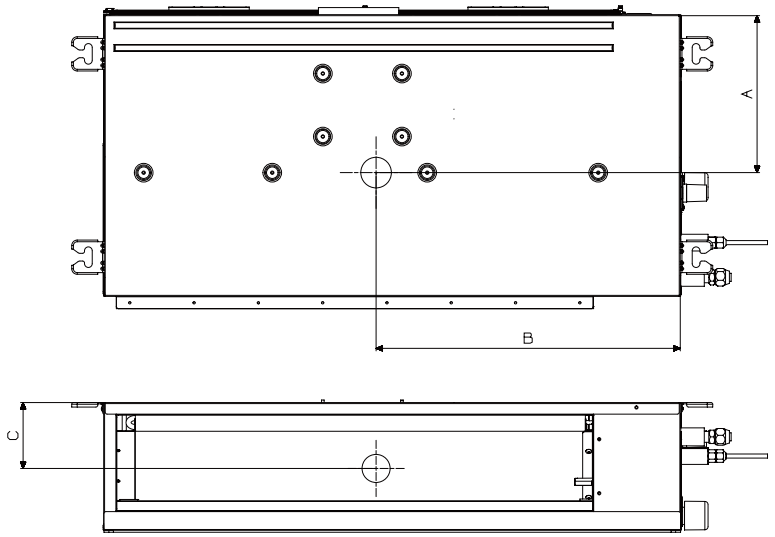

Model	A	B	C
AJ026TNL*KH/EA, AJ035TNL*KH/EA	230	356	100
AJ052TNL*KH/EA	233	436	100
AJ071TNL*KH/EA	240	540	100

7. Electrical Wiring Diagram

7-1 Outdoor unit

1 AJ040TXJ2KH/EA, AJ050TXJ2KH/EA

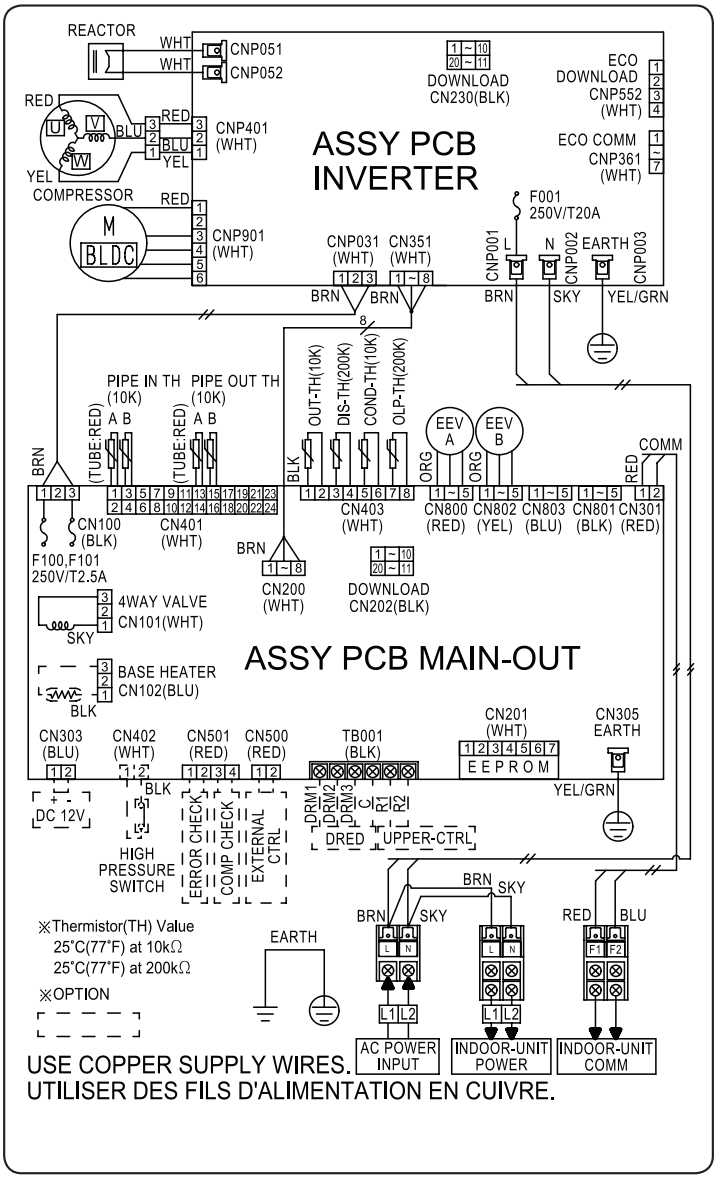

ASSY PCB INVERTER	Printed circuit board(Inverter PBA)
ASSY PCB MAIN	Printed circuit board(Main PBA)
F001(250V/ T30A)	Fuse(Inverter PBA)
F100(250V/ T2.5A)	Fuse(Main PBA)
F101(250V/ T2.5A)	Fuse(Main PBA)
OUT-TH	Thermistor(Ambient Temp. - 10kohm)
DIS-TH	Thermistor(Discharge Temp. - 200kohm)
COND-TH	Thermistor(Condensor Temp. - 10kohm)
OLP-TH	Thermistor(Compressor Top Temp. - 200kohm)
PIPE IN TH - A	Thermistor(A Pipe In Temp. - 10kohm)
PIPE IN TH - B	Thermistor(B Pipe In Temp. - 10kohm)
PIPE OUT TH - A	Thermistor(A Pipe Out Temp. - 10kohm)
PIPE OUT TH - B	Thermistor(B Pipe Out Temp. - 10kohm)
EEV - A	Electronic Expansion Valve A
EEV - B	Electronic Expansion Valve B
COMPRESSOR	Motor(Compressor)
M-BLDC	Motor(FAN)
4WAY VALVE	Solenoid Valve(4Way)
BASE HEATER	Heating Wire

NOTE

- This wiring diagram applies only to the outdoor unit.
- Colors BLK : black, BRN : brown, SKY-BLU : sky-blue, GRN/YEL : green/yellow, RED : red, YEL : yellow, ORG : orange, BLU : blue, WHT: white
- For connection wiring indoor-outdoor transmission, refer to the installation manual
- ⏚ Protective earth(screw)

7. Electrical Wiring Diagram

7-1 Outdoor unit

2 AJ068TXJ3KH/EA, AJ080TXJ4KH/EA

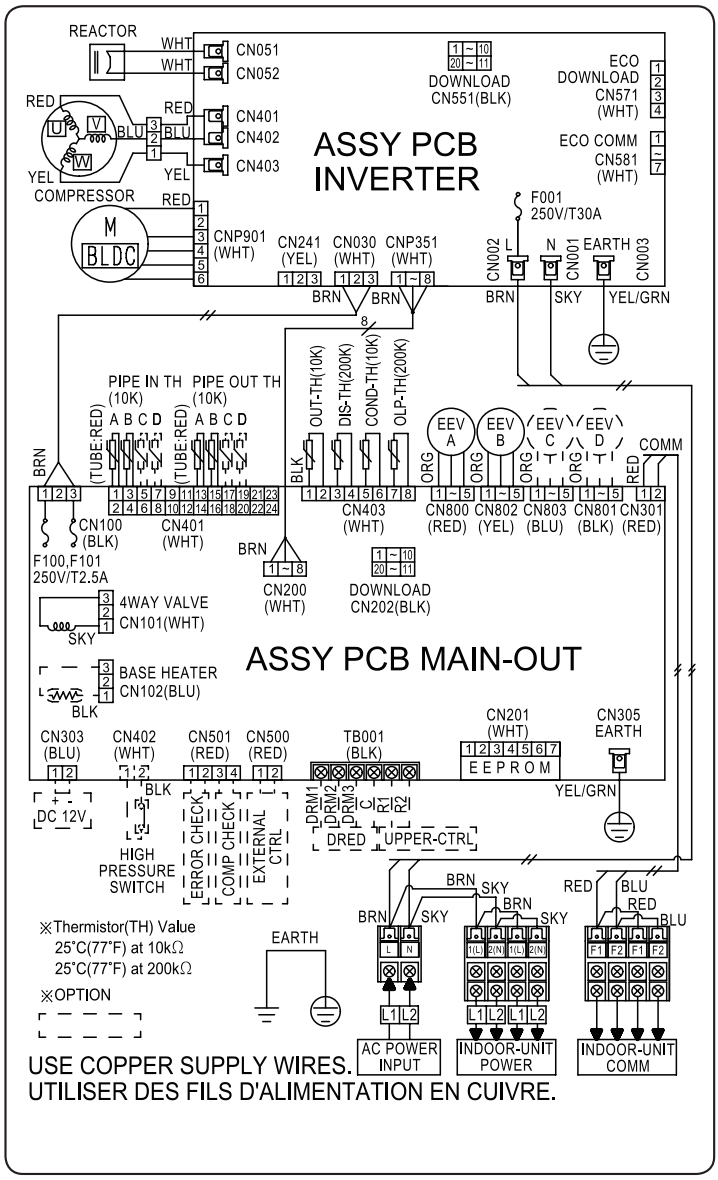

ASSY PCB INVERTER	Printed circuit board(Inverter PBA)
ASSY PCB MAIN	Printed circuit board(Main PBA)
F001(250V/ T30A)	Fuse(Inverter PBA)
F100(250V/ T2.5A)	Fuse(Main PBA)
F101(250V/ T2.5A)	Fuse(Main PBA)
OUT-TH	Thermistor(Ambient Temp. - 10kohm)
DIS-TH	Thermistor(Discharge Temp. - 200kohm)
COND-TH	Thermistor(Condensor Temp. - 10kohm)
OLP-TH	Thermistor(Compressor Top Temp. - 200kohm)
PIPE IN TH - A	Thermistor(A Pipe In Temp. - 10kohm)
PIPE IN TH - B	Thermistor(B Pipe In Temp. - 10kohm)
PIPE IN TH - C	Thermistor(C Pipe In Temp. - 10kohm)
PIPE IN TH - D	Thermistor(D Pipe In Temp. - 10kohm)
PIPE OUT TH - A	Thermistor(A Pipe Out Temp. - 10kohm)
PIPE OUT TH - B	Thermistor(B Pipe Out Temp. - 10kohm)
PIPE OUT TH - C	Thermistor(C Pipe Out Temp. - 10kohm)
PIPE OUT TH - D	Thermistor(D Pipe Out Temp. - 10kohm)
EEV - A	Electronic Expansion Valve A
EEV - B	Electronic Expansion Valve B
EEV - C	Electronic Expansion Valve C
EEV - D	Electronic Expansion Valve D
COMPRESSOR	Motor(Compressor)
M-BLDC	Motor(FAN)
4WAY VALVE	Solenoid Valve(4Way)
BASE HEATER	Heating Wire

NOTE

- This wiring diagram applies only to the outdoor unit.
- Colors BLK : black, BRN : brown, SKY-BLU : sky-blue, GRN/YEL : green/yellow, RED : red, YEL : yellow, ORG : orange, BLU : blue, WHT: white
- For connection wiring indoor-outdoor transmission, refer to the installation manual
- Protective earth(screw)

7. Electrical Wiring Diagram

7-1 Outdoor unit

3 AJ100TXJ5KH/EA, AJ125TXJ5KH/EA, AJ140TXJ5KH/EA

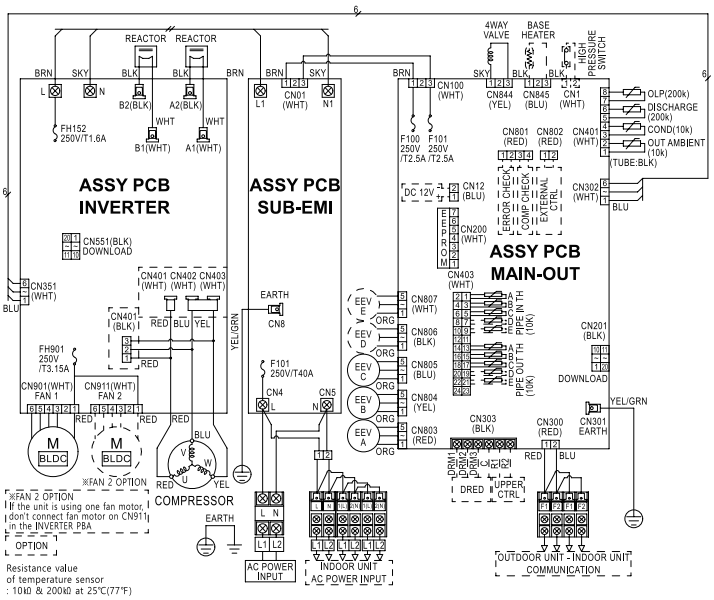

ASSY PCB INVERTER	Printed circuit board(Inverter PBA)	**BASE HEATER**	Heating Wire	**PIPE OUT TH - A**	Thermistor(A Pipe Out Temp. - 10kohm)
ASSY PCB SUB-EMI	Printed circuit board(EMI PBA)	**OUT-TH**	Thermistor(Ambient Temp. - 10kohm)	**PIPE OUT TH - B**	Thermistor(B Pipe Out Temp. - 10kohm)
ASSY PCB MAIN-OUT	Printed circuit board(Main PBA)	**DIS-TH**	Thermistor(Discharge Temp. - 200kohm)	**PIPE OUT TH - C**	Thermistor(C Pipe Out Temp. - 10kohm)
FH152(250V/T1.6A)	Fuse(Inverter PBA)	**COND-TH**	Thermistor(Condensor Temp. - 10kohm)	**PIPE OUT TH - D**	Thermistor(D Pipe Out Temp. - 10kohm)
FH901(250V/T3.15A)	Fuse(Inverter PBA)	**OLP-TH**	Thermistor(Compressor Top Temp. - 200kohm)	**PIPE OUT TH - E**	Thermistor(E Pipe Out Temp. - 10kohm)
F101(250V/T40A)	Fuse(EMI PBA)	**PIPE IN TH - A**	Thermistor(A Pipe In Temp. - 10kohm)	**EEV - A**	Electronic Expansion Valve A
F100(250V/T2.5A)	Fuse(Main PBA)	**PIPE IN TH - B**	Thermistor(B Pipe In Temp. - 10kohm)	**EEV - B**	Electronic Expansion Valve B
F101(250V/T2.5A)	Fuse(Main PBA)	**PIPE IN TH - C**	Thermistor(C Pipe In Temp. - 10kohm)	**EEV - C**	Electronic Expansion Valve C
COMPRESSOR	Motor(Compressor)	**PIPE IN TH - D**	Thermistor(D Pipe In Temp. - 10kohm)	**EEV - D**	Electronic Expansion Valve D
M-BLDC	Motor(FAN)	**PIPE IN TH - E**	Thermistor(E Pipe In Temp. - 10kohm)	**EEV - E**	Electronic Expansion Valve E
4WAY VALVE	Solenoid Valve(4Way)				

NOTE

- This wiring diagram applies only to the outdoor unit.
- Colors BLK : black, BRN : brown, SKY-BLU : sky-blue, GRN/YEL : green/yellow, RED : red, YEL : yellow, ORG : orange, BLU : blue, WHT: white
- For connection wiring indoor-outdoor transmission 3(C), refer to the installation manual
- ⏚ Protective earth(screw)

7. Electrical Wiring Diagram

7-2 Indoor unit

1 Wall-mounted : AR5500, AR9500

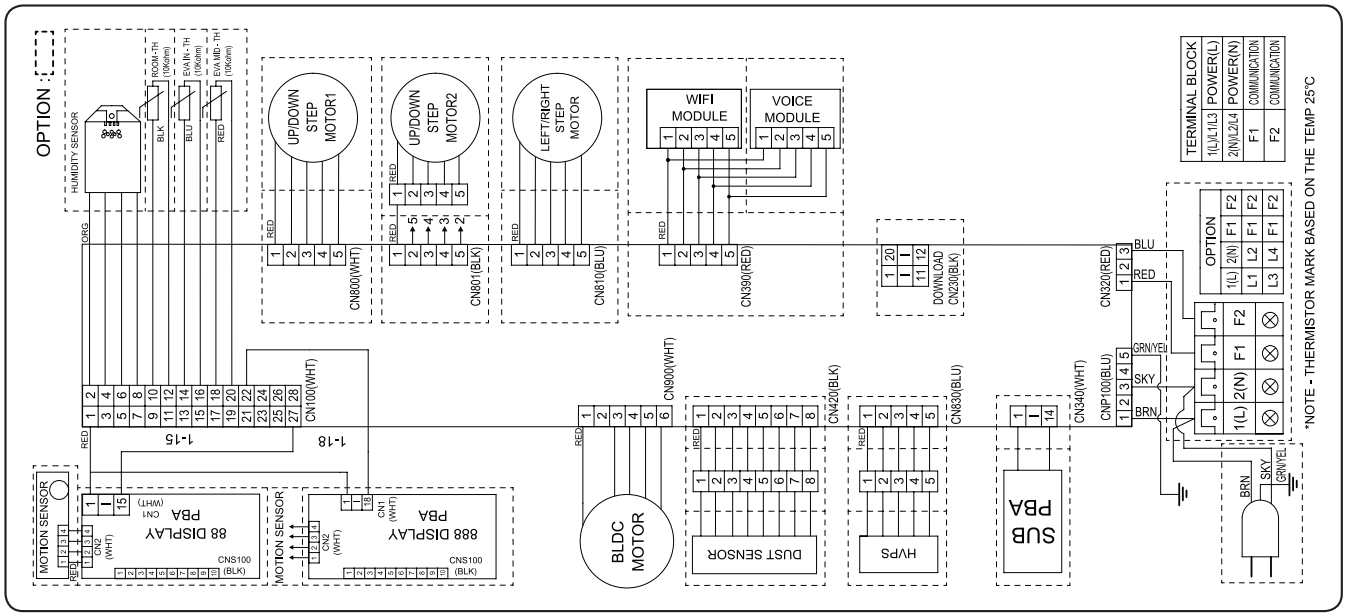

MAIN PBA	Printed circuit board(MAIN)	**BLDC MOTOR**	BLDC Motor	**ROOM-TH(10K)**	Thermistor ROOM
88 DISPLAY	Printed circuit board(DISPLAY)	**HVPS**	High voltage power supply(Option)	**EVA IN-TH(10K)**	Thermistor EVA IN
SUB	Printed circuit board(SUB)	**DUST SENSOR**	Dust Sensor(Option)	**EVA MID-TH(10K)**	Thermistor EVA OUT
WIFI MODULE	Wifi(Option)	**HUMIDITY SENSOR**	Humidity Sensor(Option)	**STEP MOTOR1**	Up/Down Louver
VOICE MODULE	Voice recognition(Option)	**STEP MOTOR**	Left/Rigth Louver	**STEP MOTOR2**	Up/Down Louver(Option)

NOTE

- This wiring diagram applies only to the outdoor unit.
- Colors BLK : black, BRN : brown, SKY-BLU : sky-blue, GRN/YEL : green/yellow, RED : red, YEL : yellow, ORG : orange, BLU : blue, WHT: white
- For connection wiring indoor-outdoor transmission 3(C), refer to the installation manual
- ⏚ Protective earth(screw)

7. Electrical Wiring Diagram

7-2 Indoor unit

2 Wind-Free 1Way Cassette

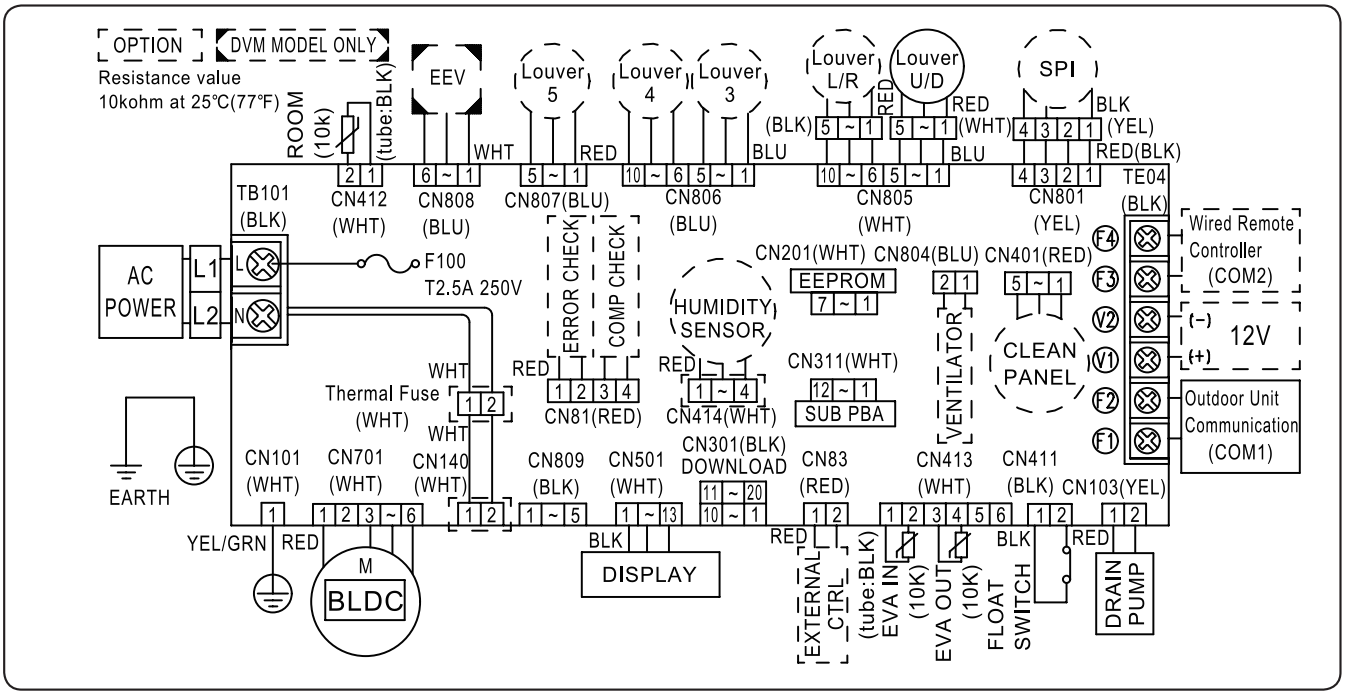

MAIN PBA	Printed circuit board(MAIN)	M-BLDC	BLDC Motor	ROOM-TH(10K)	Thermistor ROOM
FLOAT SWITCH	Switch of the float of Drain	EEV	Electronic Expansion Valve(Option)	EVA IN-TH(10K)	Thermistor EVA IN
HUMIDITY SENSOR	Humidity Sensor(Option)	SPI	S-Plasma ion(Option)	EVA OUT-TH(10K)	Thermistor EVA OUT

NOTE

- This wiring diagram applies only to the outdoor unit.
- Colors BLK : black, BRN : brown, SKY-BLU : sky-blue, GRN/YEL : green/yellow, RED : red, YEL : yellow, ORG : orange, BLU : blue, WHT: white
- For connection wiring indoor-outdoor transmission 3(C), refer to the installation manual
- ⏚ Protective earth(screw)

7. Electrical Wiring Diagram

7-2 Indoor unit

3 Wind-Free 4Way Cassette (600x600)

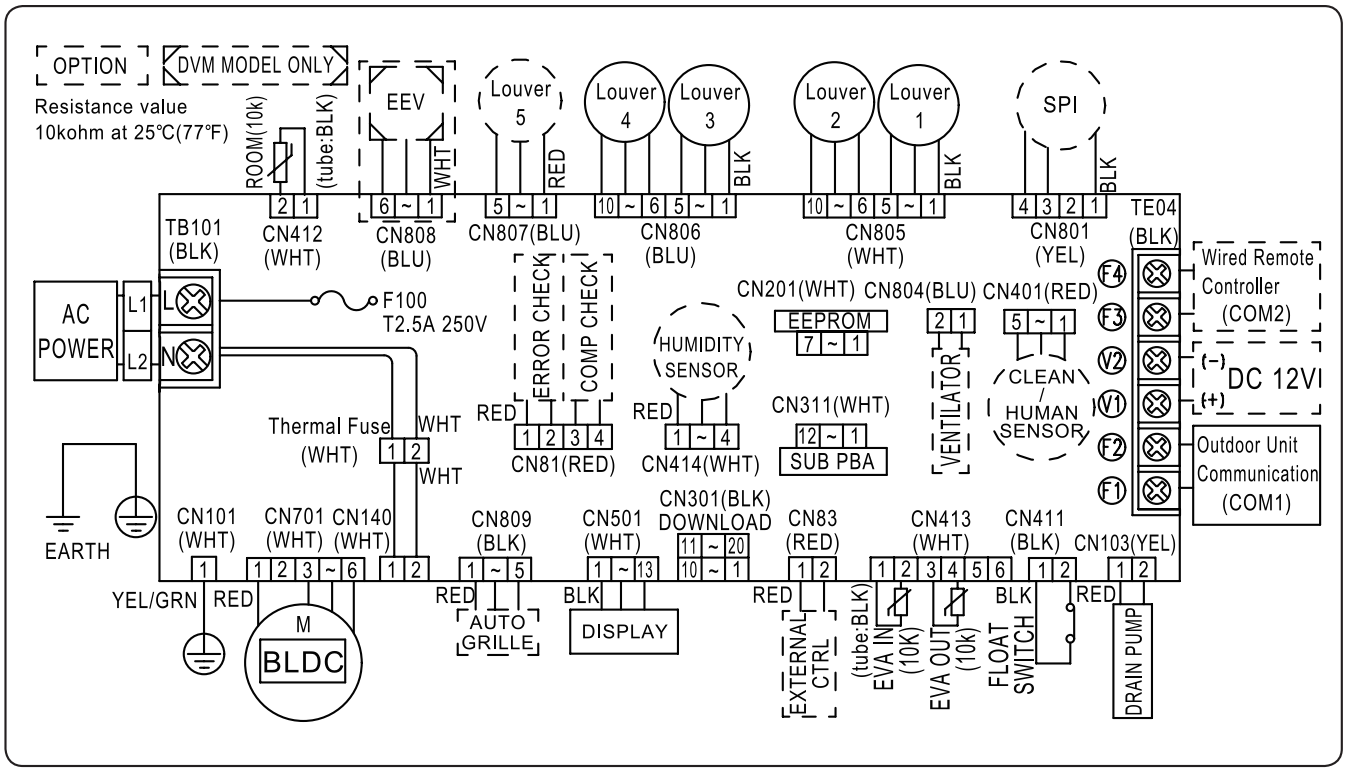

MAIN PBA	Printed circuit board(MAIN)	M-BLDC	BLDC Motor	ROOM-TH(10K)	Thermistor ROOM
FLOAT SWITCH	Switch of the float of Drain	EEV	Electronic Expansion Valve(Option)	EVA IN-TH(10K)	Thermistor EVA IN
HUMIDITY SENSOR	Humidity Sensor(Option)	SPI	S-Plasma ion(Option)	EVA OUT-TH(10K)	Thermistor EVA OUT

NOTE

- This wiring diagram applies only to the indoor unit.
- Colors BLK : black, BRN : brown, SKY-BLU : sky-blue, GRN/YEL : green/yellow, RED : red, YEL : yellow, ORG : orange, BLU : blue, WHT:white
- For connection wiring indoor-outdoor transmission F1-F2, indoor-wired remotecontroller transmission F3-F4, refer to the installation manual
- ⏚ Protective earth(screw)

7. Electrical Wiring Diagram

7-2 Indoor unit

4 Home duct

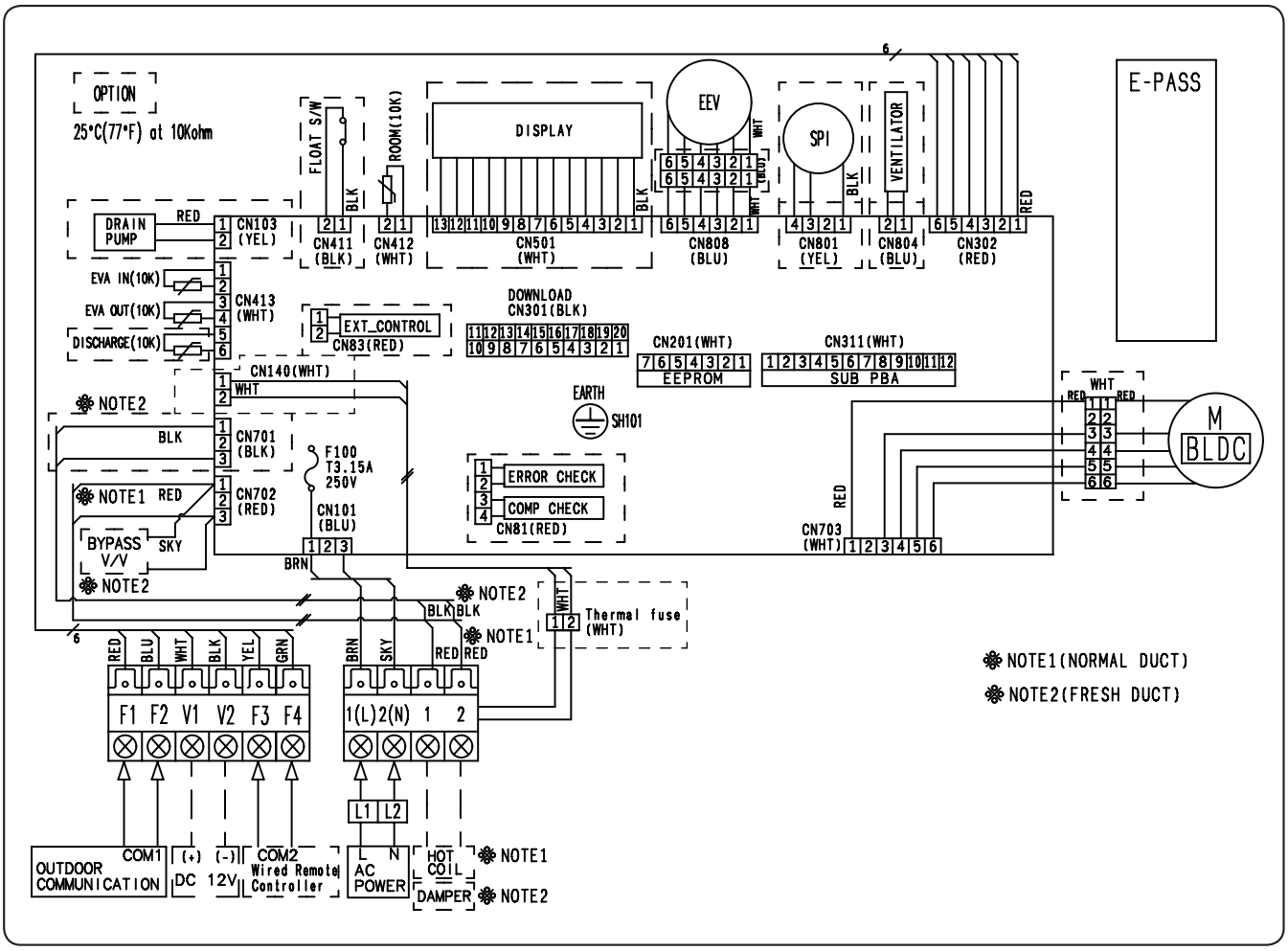

MAIN PCB	Printed circuit board(MAIN)	M-BLDC	BLDC Motor	ROOM-TH(10K)	Thermistor ROOM
DISPLAY PCB	Printed circuit board(Display_Option)	EEV	Electronic Expansion Valve(Option)	EVA IN-TH(10K)	Thermistor EVA IN
FLOAT SWITCH	Switch of the float of Drain	SPI	S-Plasma ion(Option)	EVA OUT-TH(10K)	Thermistor EVA OUT

NOTE

- This wiring diagram applies only to the indoor unit.
- Colors BLK : black, BRN : brown, SKY-BLU : sky-blue, GRN/YEL : green/yellow, RED : red, YEL : yellow, ORG : orange, BLU : blue, WHT:white
- For connection wiring indoor-outdoor transmission F1-F2, indoor-wired remotecontroller transmission F3-F4, refer to the installation manual
- Protective earth(screw)

8. Sound Data

8-1. Outdoor unit

Sound Pressure level

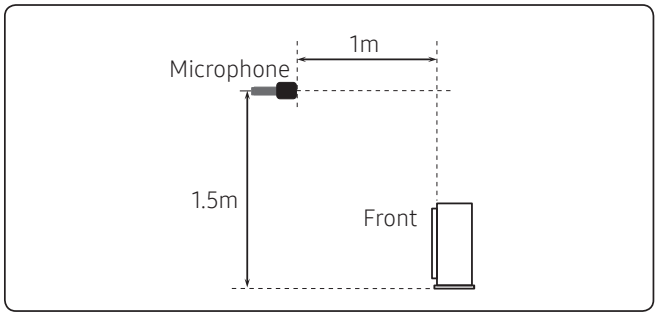

Unit: dB(A)

Model	Cooling	Heating
AJ040TXJ2KH/EA	45	47
AJ050TXJ2KH/EA	46	48
AJ068TXJ3KH/EA	48	50
AJ080TXJ4KH/EA	48	50

- NR Curve

1) AJ040TXJ2KH/EA

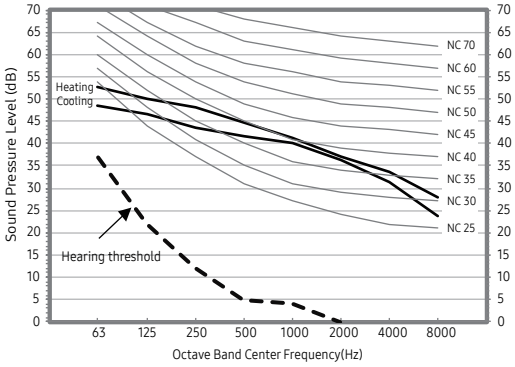

2) AJ050TXJ2KH/EA

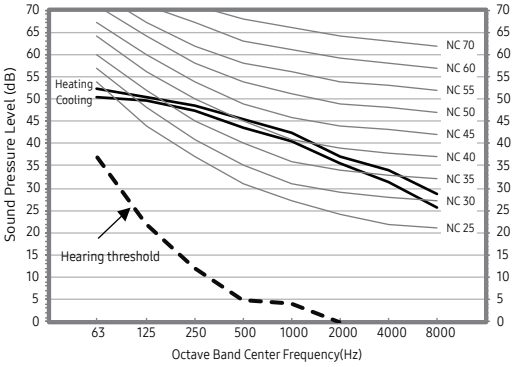

3) AJ068TXJ3KH/EA

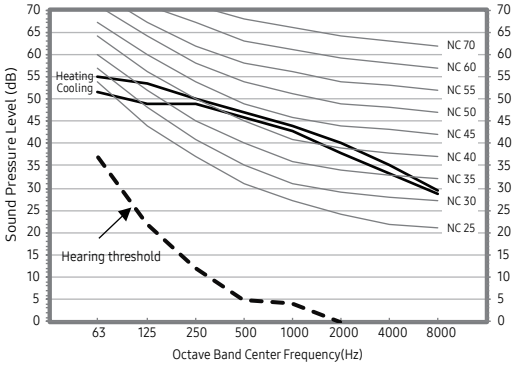

4) AJ080TXJ4KH/EA

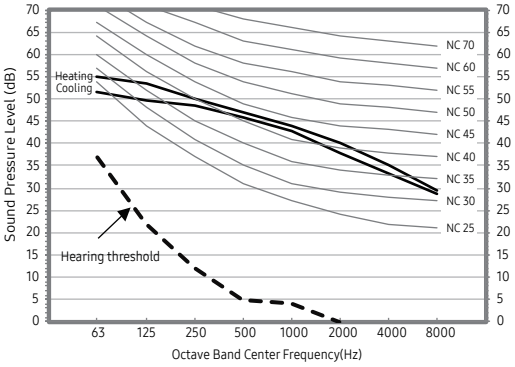

NOTE

- Specifications may be subject to change without prior notice
  - Sound pressure level is obtained in an anechoic room.
  - Sound pressure level is a relative value, depending on the distance and acoustic environment.
  - Sound pressure level may differ depending on operation condition.
  - dBA = A-weighted sound pressure level
  - Reference acoustic pressure 0 dB = 20μPa

8. Sound Data

8-1. Outdoor unit

Sound Pressure level

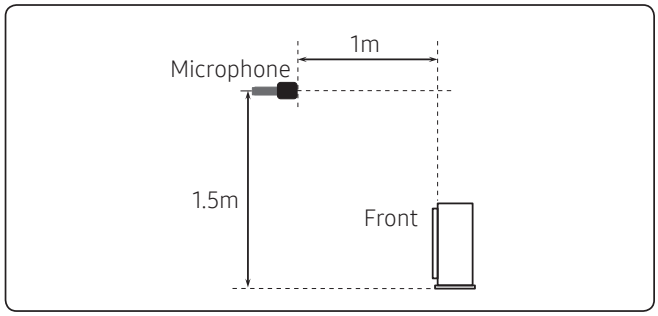

Unit: dB(A)

Model	Cooling	Heating
AJ100TXJ5KH/EA	54	55
AJ125TXJ5KH/EA	52	54
AJ140TXJ5KH/EA	52	54

- NR Curve

5) AJ100TXJ5KH/EA

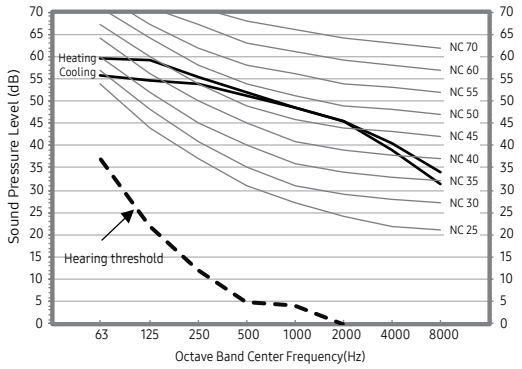

6) AJ125TXJ5KH/EA

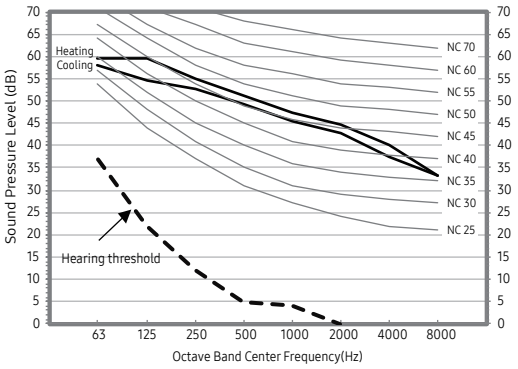

7) AJ140TXJ5KH/EA

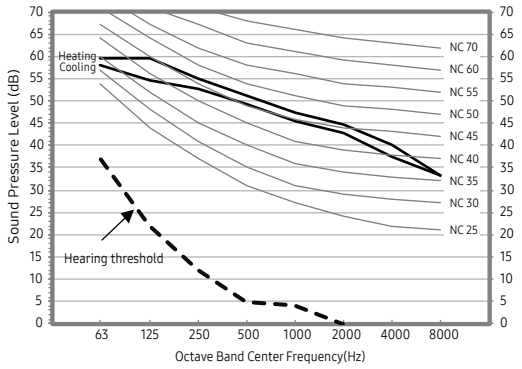

NOTE

- Specifications may be subject to change without prior notice
  - Sound pressure level is obtained in an anechoic room.
  - Sound pressure level is a relative value, depending on the distance and acoustic environment.
  - Sound pressure level may differ depending on operation condition.
  - dBA = A-weighted sound pressure level
  - Reference acoustic pressure 0 dB = 20μPa

8. Sound Data

8-2. Indoor unit

Sound Pressure level

1 Wall mounted: AR9500

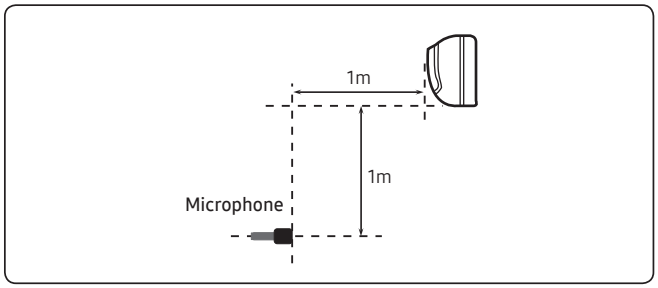

Unit: dB(A)

Model	High	Silent
AJ020TNAPKH/EA	38	23
AJ025TNAPKH/EA	38	23
AJ035TNAPKH/EA	39	23

- NR Curve

1) AJ020TNAPKH/EA

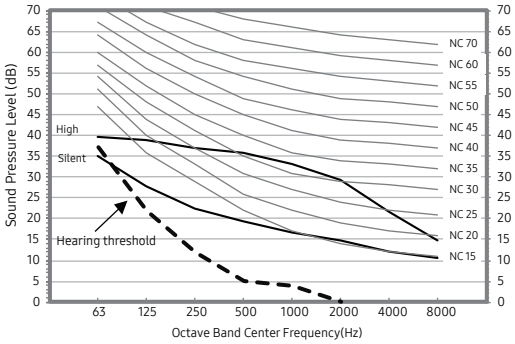

2) AJ025TNAPKH/EA

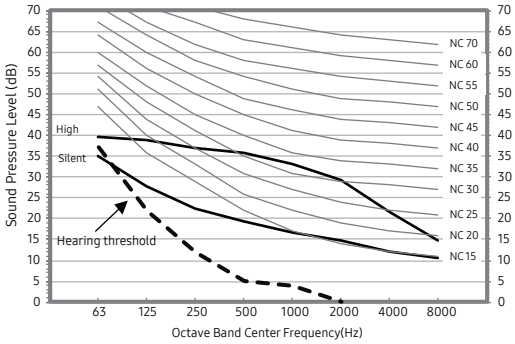

3) AJ035TNAPKH/EA

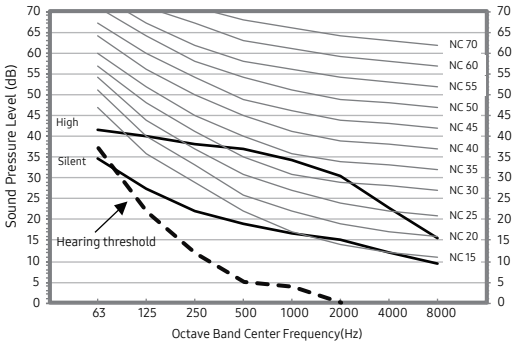

NOTE

- Specifications may be subject to change without prior notice
  - Sound pressure level is obtained in an anechoic room.
  - Sound pressure level is a relative value, depending on the distance and acoustic environment.
  - Sound pressure level may differ depending on operation condition.
  - dBA = A-weighted sound pressure level
  - Reference acoustic pressure 0 dB = 20μPa

8. Sound Data

8-2. Indoor unit

Sound Pressure level

1 Wall mounted: AR9500

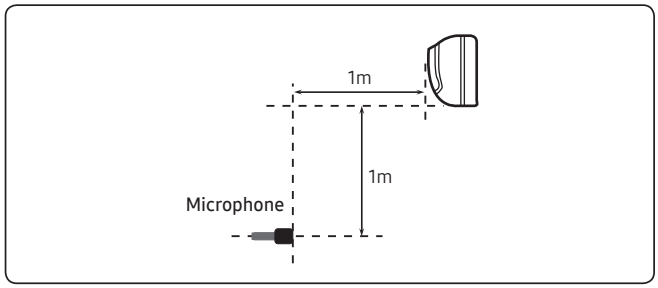

Unit: dB(A)

Model	High	Silent
AJ050TNAPKH/EA	42	30
AJ068TNAPKH/EA	47	30

- NR Curve

4) AJ050TNAPKH/EA

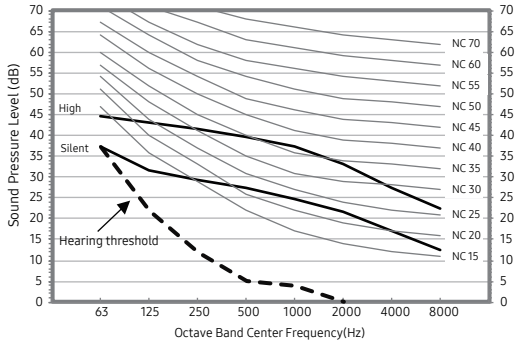

5) AJ068TNAPKH/EA

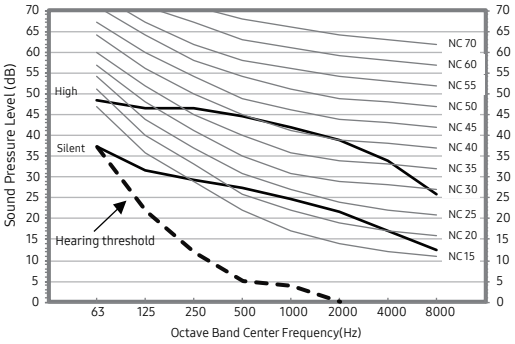

NOTE

- Specifications may be subject to change without prior notice
  - Sound pressure level is obtained in an anechoic room.
  - Sound pressure level is a relative value, depending on the distance and acoustic environment.
  - Sound pressure level may differ depending on operation condition.
  - dBA = A-weighted sound pressure level
  - Reference acoustic pressure 0 dB = 20μPa

8. Sound Data

8-2. Indoor unit

Sound Pressure level

1 Wall mounted: AR9500

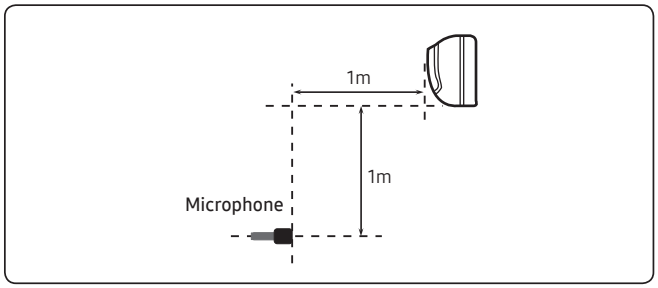

Unit: dB(A)

Model	High	Silent
AJ020TNAPKH/TK	38	23
AJ025TNAPKH/TK	38	23
AJ035TNAPKH/TK	39	23

- NR Curve

6) AJ020TNAPKH/TK

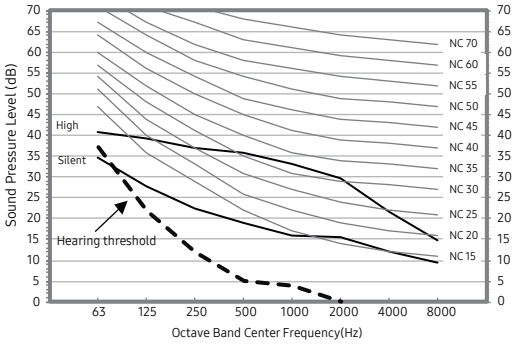

7) AJ025TNAPKH/TK

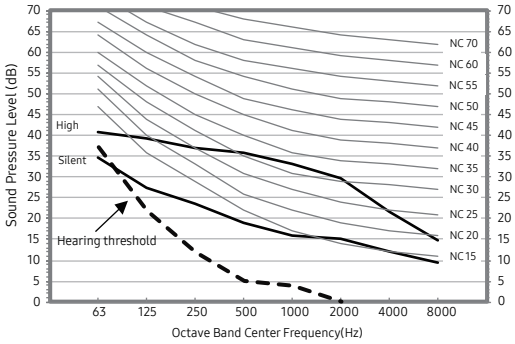

8) AJ035TNAPKH/TK

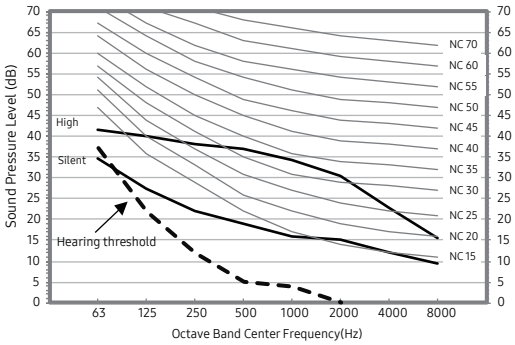

NOTE

- Specifications may be subject to change without prior notice
  - Sound pressure level is obtained in an anechoic room.
  - Sound pressure level is a relative value, depending on the distance and acoustic environment.
  - Sound pressure level may differ depending on operation condition.
  - dBA = A-weighted sound pressure level
  - Reference acoustic pressure 0 dB = 20μPa

8. Sound Data

8-2. Indoor unit

Sound Pressure level

1 Wall mounted: AR9500

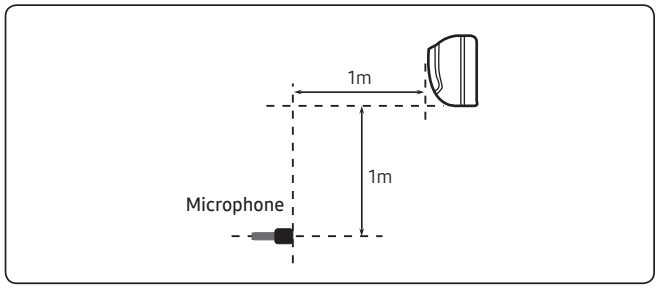

Unit: dB(A)

Model	High	Silent
AJ050TNAPKH/TK	42	30
AJ068TNAPKH/TK	47	30

- NR Curve

9) AJ050TNAPKH/TK

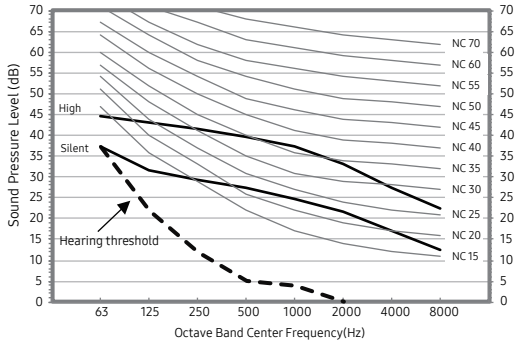

10) AJ068TNAPKH/TK

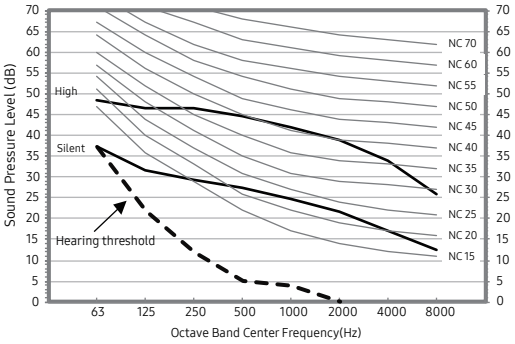

NOTE

- Specifications may be subject to change without prior notice
  - Sound pressure level is obtained in an anechoic room.
  - Sound pressure level is a relative value, depending on the distance and acoustic environment.
  - Sound pressure level may differ depending on operation condition.
  - dBA = A-weighted sound pressure level
  - Reference acoustic pressure 0 dB = 20μPa

8. Sound Data

8-2. Indoor unit

Sound Pressure level

2 Wall mounted: AR5500

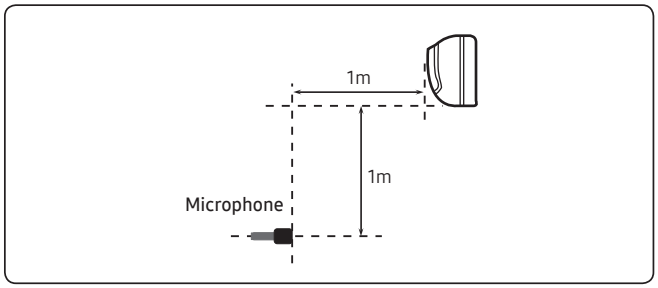

Unit: dB(A)

Model	High	Silent
AJ020TNTDKH/EA	37	23
AJ025TNTDKH/EA	37	23
AJ035TNTDKH/EA	38	23

- NR Curve

1) AJ020TNTDKH/EA

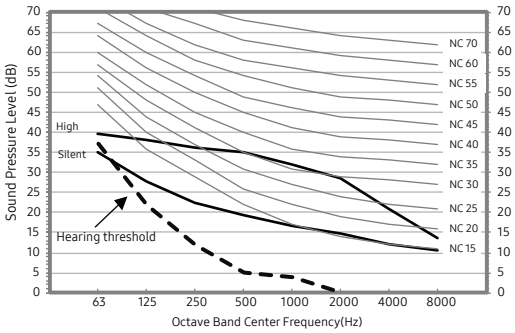

2) AJ025TNTDKH/EA

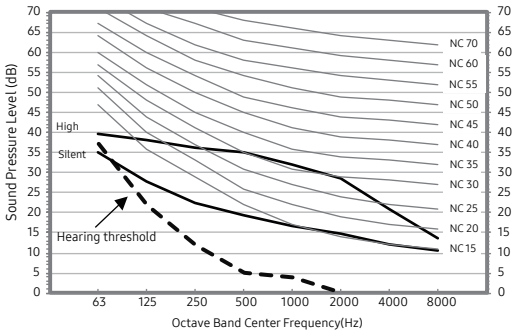

3) AJ035TNTDKH/EA

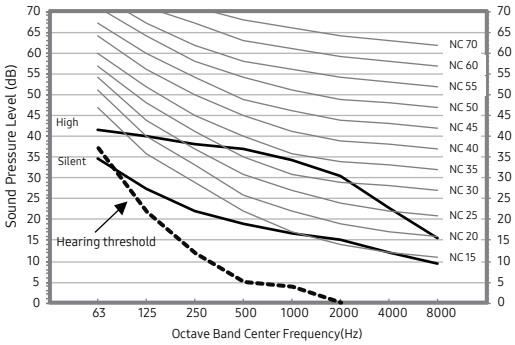

NOTE

- Specifications may be subject to change without prior notice
  - Sound pressure level is obtained in an anechoic room.
  - Sound pressure level is a relative value, depending on the distance and acoustic environment.
  - Sound pressure level may differ depending on operation condition.
  - dBA = A-weighted sound pressure level
  - Reference acoustic pressure 0 dB = 20μPa

8. Sound Data

8-2. Indoor unit

Sound Pressure level

2 Wall mounted: AR5500

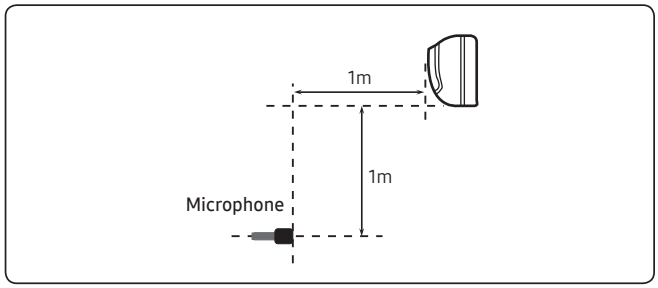

Unit: dB(A)

Model	High	Silent
AJ050TNTDKH/EA	41	30
AJ068TNTDKH/EA	45	30

- NR Curve

4) AJ050TNTDKH/EA

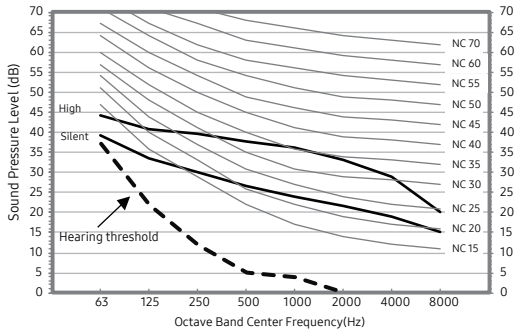

5) AJ068TNTDKH/EA

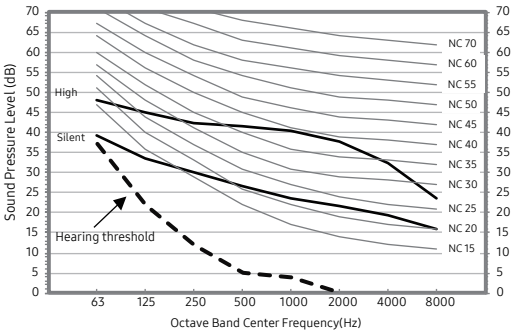

NOTE

- Specifications may be subject to change without prior notice
  - Sound pressure level is obtained in an anechoic room.
  - Sound pressure level is a relative value, depending on the distance and acoustic environment.
  - Sound pressure level may differ depending on operation condition.
  - dBA = A-weighted sound pressure level
  - Reference acoustic pressure 0 dB = 20μPa

8. Sound Data

8-2. Indoor unit

Sound Pressure level

2 Wall mounted: AR5500

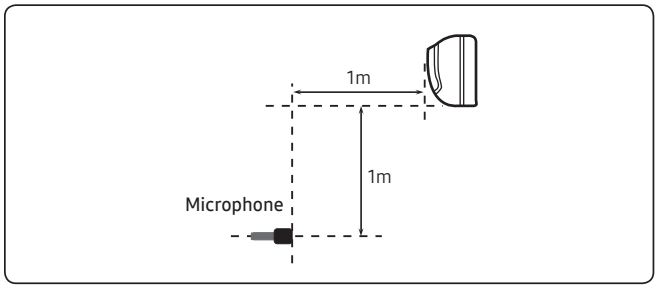

Unit: dB(A)

Model	High	Silent
AJ025TNTDKH/AR	37	23
AJ035TNTDKH/AR	38	23
AJ050TNTDKH/AR	41	30
AJ068TNTDKH/AR	45	30

- NR Curve

6) AJ025TNTDKH/AR

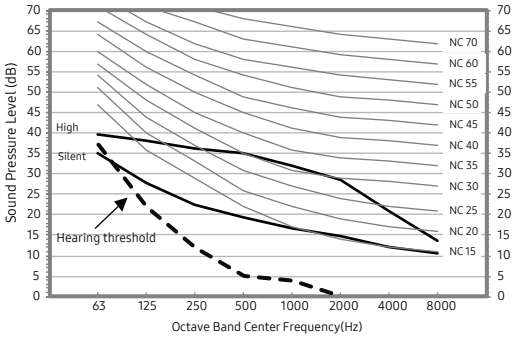

7) AJ035TNTDKH/AR

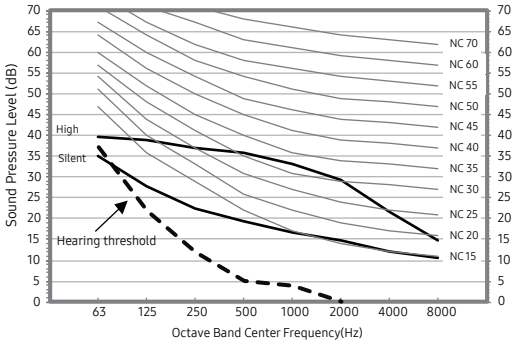

8) AJ050TNTDKH/AR

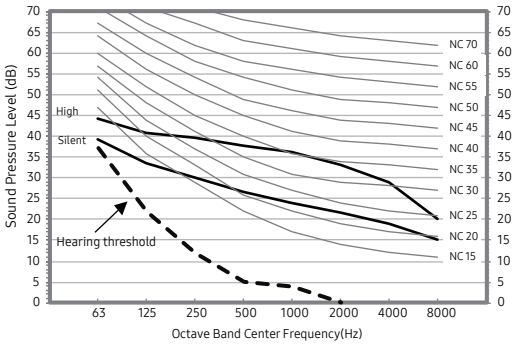

9) AJ068TNTDKH/AR

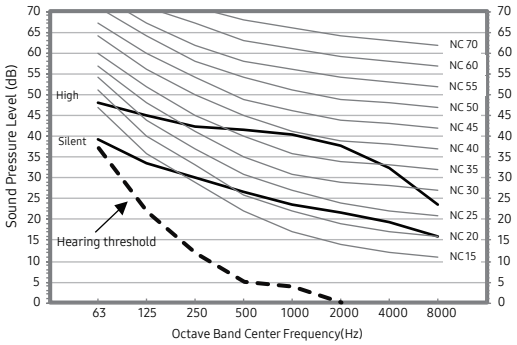

NOTE

- Specifications may be subject to change without prior notice
  - Sound pressure level is obtained in an anechoic room.
  - Sound pressure level is a relative value, depending on the distance and acoustic environment.
  - Sound pressure level may differ depending on operation condition.
  - dBA = A-weighted sound pressure level
  - Reference acoustic pressure 0 dB = 20μPa

8. Sound Data

8-2. Indoor unit

Sound Pressure level

3 (Wind-Free) 1Way Cassette

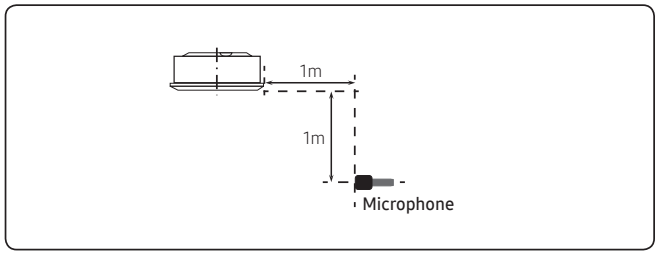

Unit: dB(A)

Model	High	Mid	Low
AJ026TN1DKH/EA	32	29	26
AJ035TN1DKH/EA	37	35	30

- NR Curve

1) AJ026TN1DKH/EA

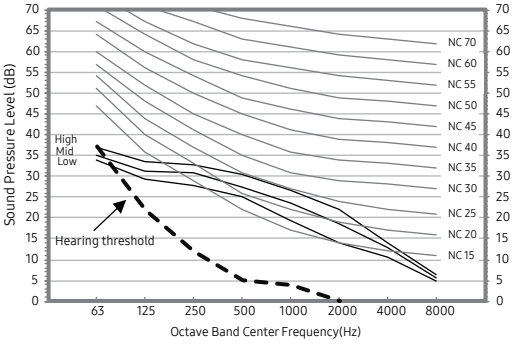

2) AJ035TN1DKH/EA

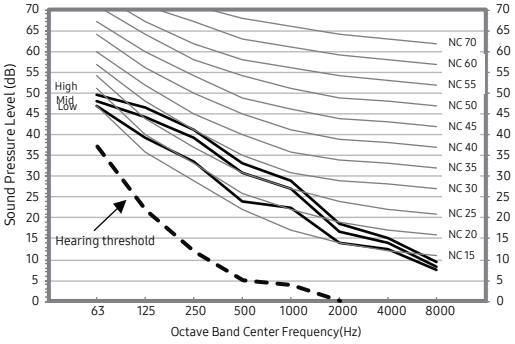

NOTE

- Specifications may be subject to change without prior notice
  - Sound pressure level is obtained in an anechoic room.
  - Sound pressure level is a relative value, depending on the distance and acoustic environment.
  - Sound pressure level may differ depending on operation condition.
  - dBA = A-weighted sound pressure level
  - Reference acoustic pressure 0 dB = 20μPa

8. Sound Data

8-2. Indoor unit

Sound Pressure level

4 (Wind-Free) 4Way Cassette (600x600)

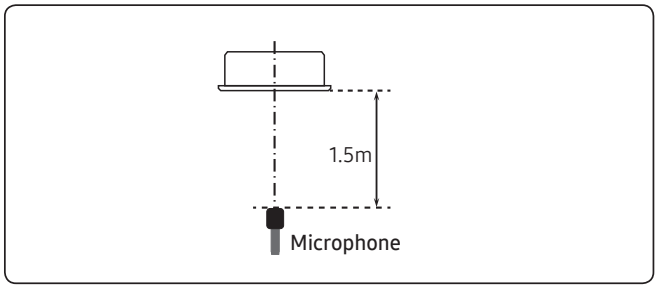

Unit: dB(A)

Model	High	Mid	Low
AJ020TNNDKH/EA	33	29	24
AJ026TNNDKH/EA	33	29	24
AJ035TNNDKH/EA	35	31	27
AJ052TNNDKH/EA	39	36	32

- NR Curve

1) AJ020TNNDKH/EA

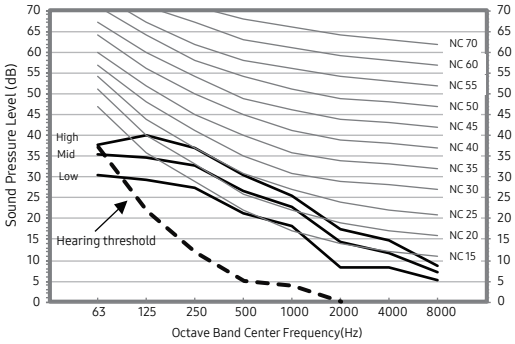

2) AJ026TNNDKH/EA

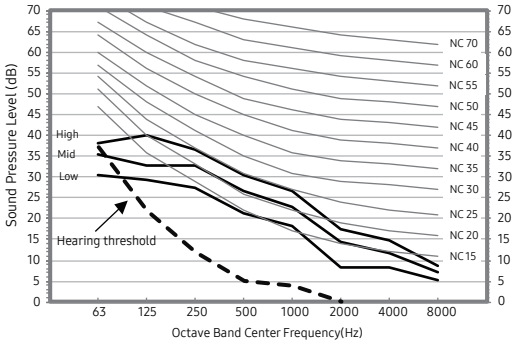

3) AJ035TNNDKH/EA

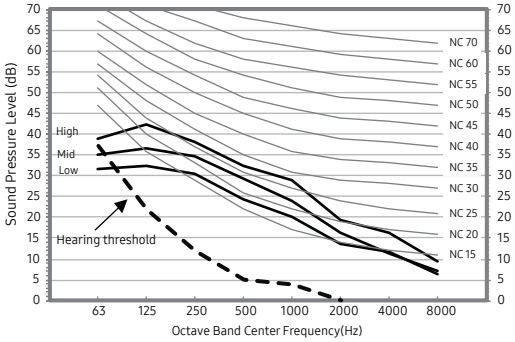

4) AJ052TNNDKH/EA

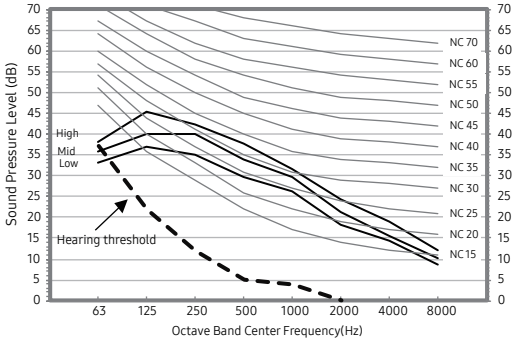

NOTE

- Specifications may be subject to change without prior notice
  - Sound pressure level is obtained in an anechoic room.
  - Sound pressure level is a relative value, depending on the distance and acoustic environment.
  - Sound pressure level may differ depending on operation condition.
  - dBA = A-weighted sound pressure level
  - Reference acoustic pressure 0 dB = 20μPa

8. Sound Data

8-2. Indoor unit

Sound Pressure level

5 Home Duct

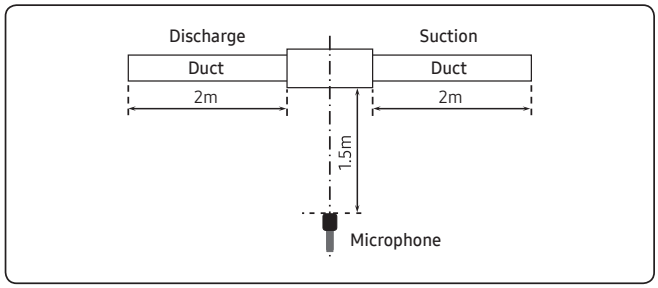

Unit: dB(A)

Model	High	Mid	Low
AJ026TNL*KH/EA	32	27	22
AJ035TNL*KH/EA	33	28	23
AJ052TNL*KH/EA	33	29	23
AJ071TNL*KH/EA	39	36	32

- NR Curve

1) AJ026TNL*KH/EA

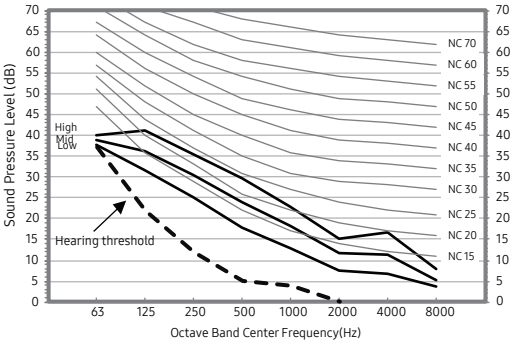

2) AJ035TNL*KH/EA

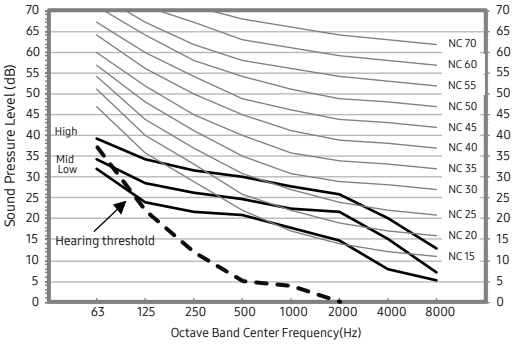

3) AJ052TNL*KH/EA

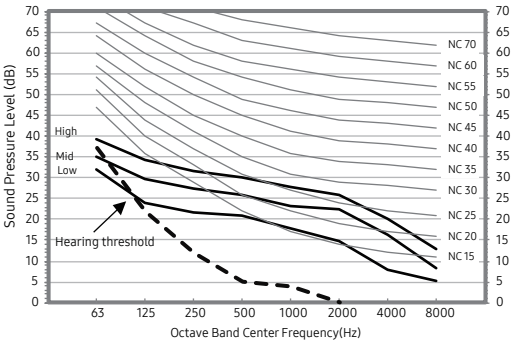

4) AJ071TNL*KH/EA

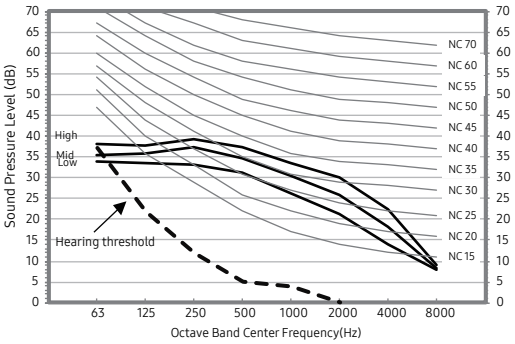

NOTE

- Specifications may be subject to change without prior notice
  - Sound pressure level is obtained in an anechoic room.
  - Sound pressure level is a relative value, depending on the distance and acoustic environment.
  - Sound pressure level may differ depending on operation condition.
  - dBA = A-weighted sound pressure level
  - Reference acoustic pressure 0 dB = 20μPa

8. Sound Data

8-3. Outdoor unit

Sound Power level

NOTE

- Specifications may be subject to change without prior notice
  - Sound power level is an absolute value that a sound source generates.
  - dBA = A-weighted sound power level.
  - Reference power : 1pW.
  - Measured according to ISO 3741.

Unit: dB(A)

Model	Cooling
AJ040TXJ2KH/EA	60
AJ050TXJ2KH/EA	61
AJ068TXJ3KH/EA	64
AJ080TXJ4KH/EA	64

1) AJ040TXJ2KH/EA

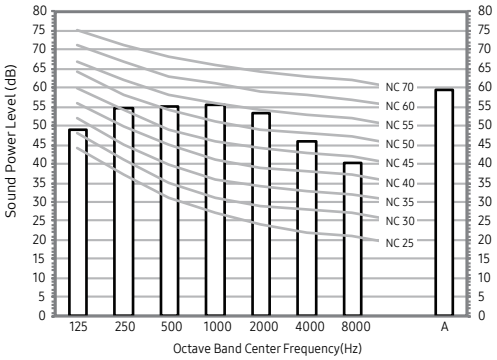

2) AJ050TXJ2KH/EA

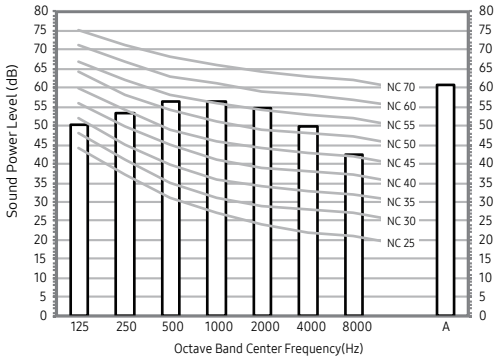

3) AJ068TXJ3KH/EA

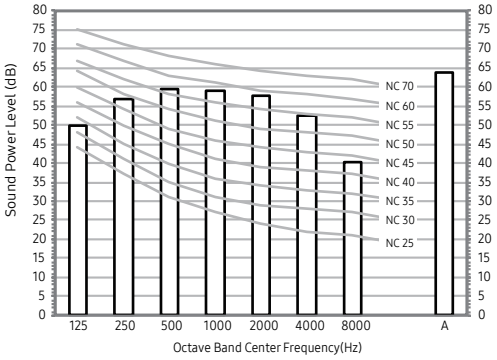

4) AJ080TXJ4KH/EA

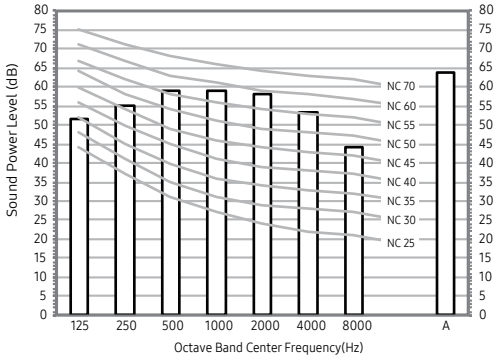

8. Sound Data

8-3. Outdoor unit

Sound Power level

NOTE

- Specifications may be subject to change without prior notice
  - Sound power level is an absolute value that a sound source generates.
  - dBA = A-weighted sound power level.
  - Reference power : 1pW.
  - Measured according to ISO 3741.

Unit: dB(A)

Model	Cooling
AJ100TXJ5KH/EA	70
AJ125TXJ5KH/EA	70
AJ140TXJ5KH/EA	70

5) AJ100TXJ5KH/EA

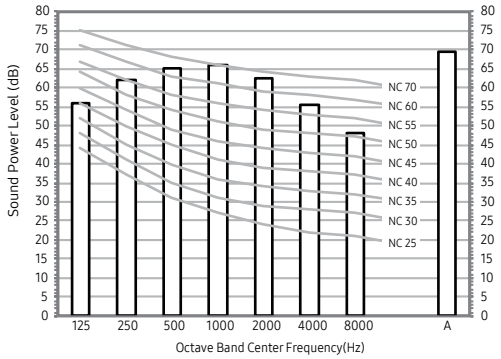

6) AJ125TXJ5KH/EA

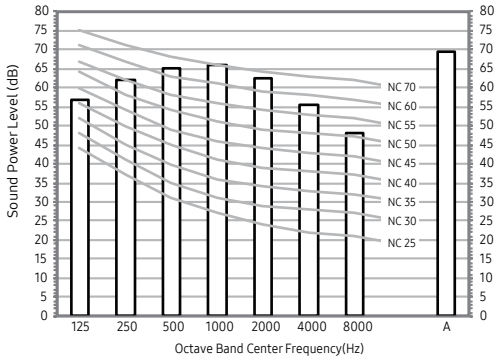

7) AJ140TXJ5KH/EA

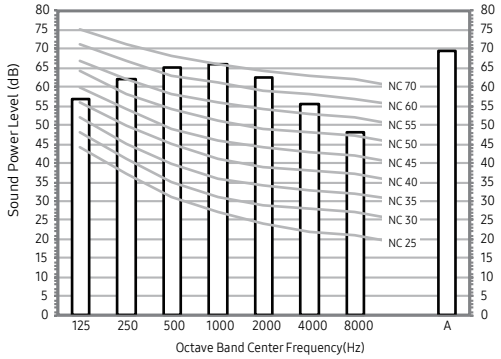

8. Sound Data

8-4. Indoor unit

Sound Power level

1 Wall mounted: AR9500

Unit: dB(A)

Model	High
AJ020TNAPKH/EA	54
AJ025TNAPKH/EA	54
AJ035TNAPKH/EA	56
AJ050TNAPKH/EA	58
AJ068TNAPKH/EA	64

NOTE

- Specifications may be subject to change without prior notice
  - Sound power level is an absolute value that a sound source generates.
  - dBA = A-weighted sound power level.
  - Reference power : 1pW.
  - Measured according to ISO 3741.

1) AJ020TNAPKH/EA

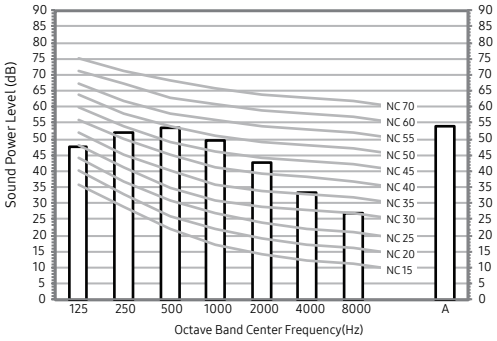

2) AJ025TNAPKH/EA

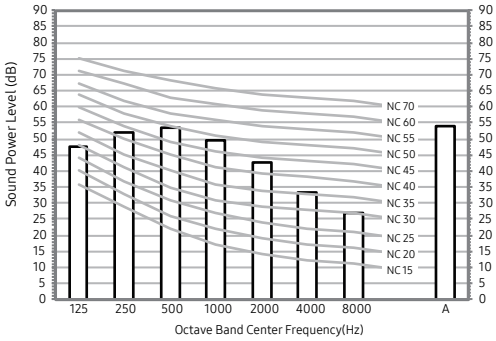

3) AJ035TNAPKH/EA

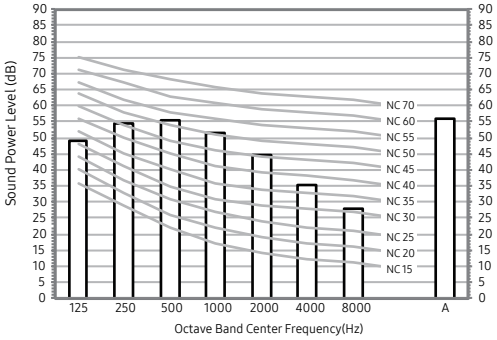

4) AJ050TNAPKH/EA

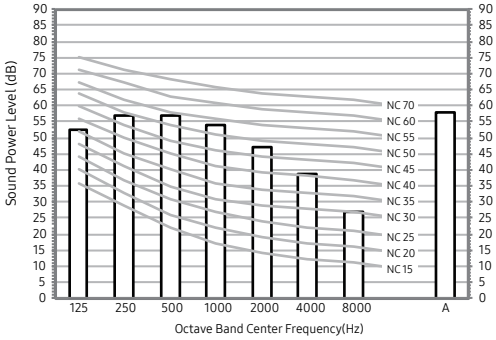

5) AJ068TNAPKH/EA

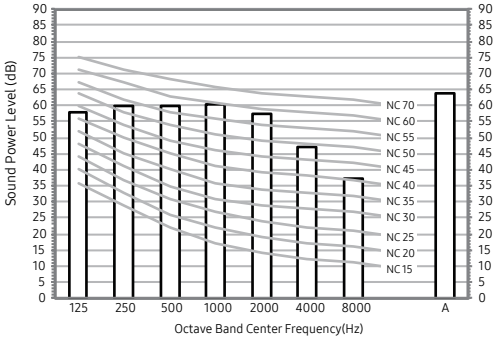

8. Sound Data

8-4. Indoor unit

Sound Power level

1 Wall mounted: AR9500

Unit: dB(A)

Model	High
AJ020TNAPKH/TK	54
AJ025TNAPKH/TK	54
AJ035TNAPKH/TK	56
AJ050TNAPKH/TK	58
AJ068TNAPKH/TK	64

NOTE

- Specifications may be subject to change without prior notice
  - Sound power level is an absolute value that a sound source generates.
  - dBA = A-weighted sound power level.
  - Reference power : 1pW.
  - Measured according to ISO 3741.

6) AJ020TNAPKH/TK

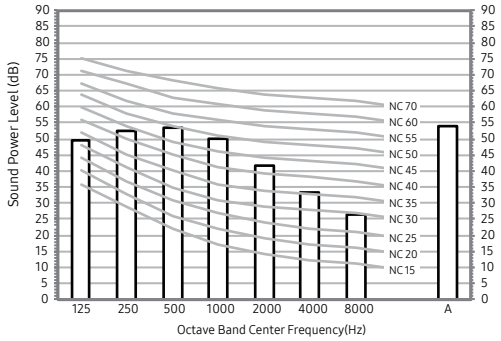

7) AJ025TNAPKH/TK

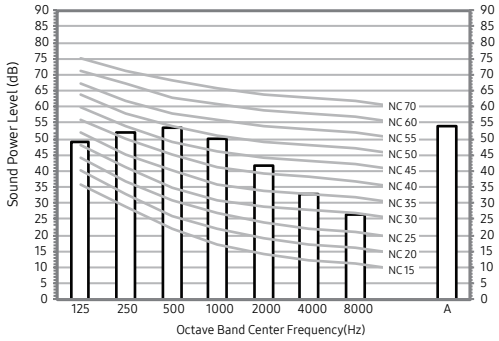

8) AJ035TNAPKH/TK

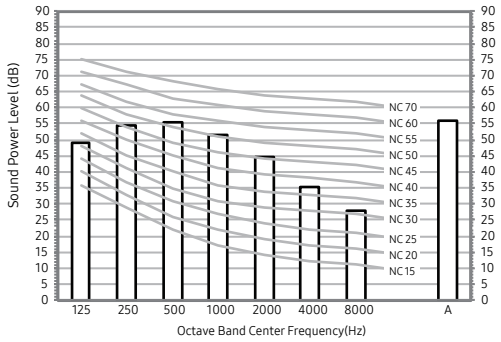

9) AJ050TNAPKH/TK

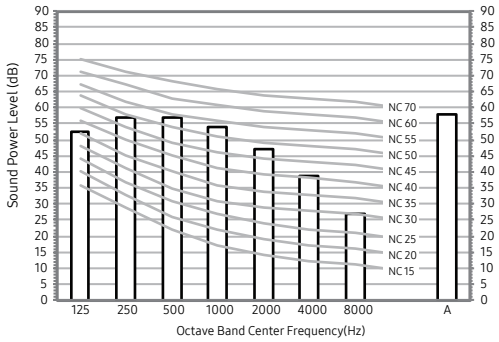

10) AJ068TNAPKH/TK

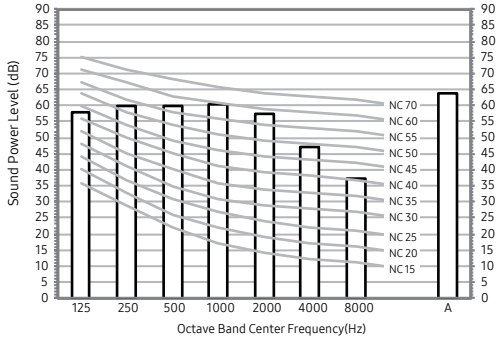

8. Sound Data

8-4. Indoor unit

Sound Power level

2 Wall mounted: AR5500

Unit: dB(A)

Model	High
AJ020TNTDKH/EA	54
AJ025TNTDKH/EA	54
AJ035TNTDKH/EA	56
AJ050TNTDKH/EA	58
AJ068TNTDKH/EA	62

NOTE

- Specifications may be subject to change without prior notice
  - Sound power level is an absolute value that a sound source generates.
  - dBA = A-weighted sound power level.
  - Reference power : 1pW.
  - Measured according to ISO 3741.

1) AJ020TNTDKH/EA

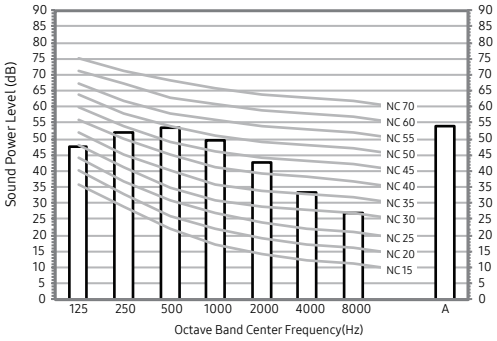

2) AJ025TNTDKH/EA

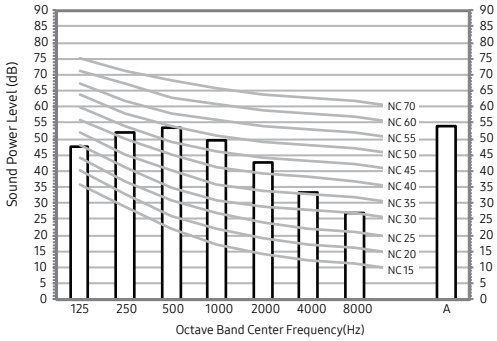

3) AJ035TNTDKH/EA

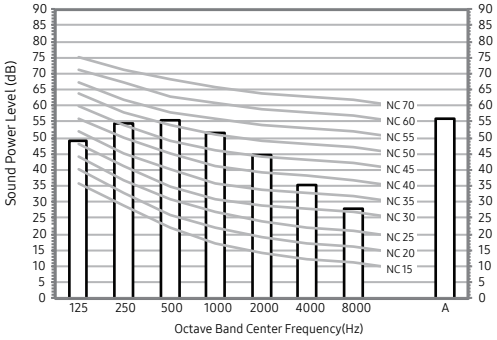

4) AJ050TNTDKH/EA

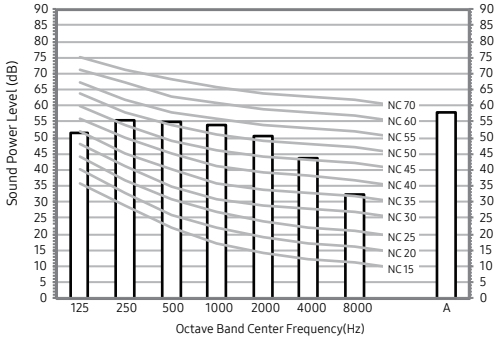

5) AJ068TNTDKH/EA

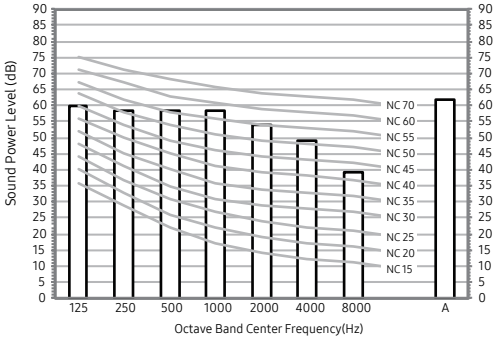

8. Sound Data

8-4. Indoor unit

Sound Power level

2 Wall mounted: AR5500

NOTE

- Specifications may be subject to change without prior notice
  - Sound power level is an absolute value that a sound source generates.
  - dBA = A-weighted sound power level.
  - Reference power : 1pW.
  - Measured according to ISO 3741.

Unit: dB(A)

Model	High
AJ025TNTDKH/AR	54
AJ035TNTDKH/AR	56
AJ050TNTDKH/AR	58
AJ068TNTDKH/AR	62

4) AJ025TNTDKH/AR

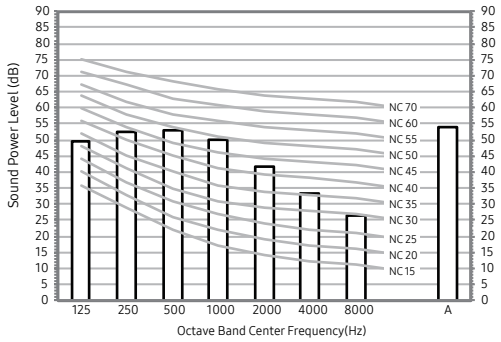

5) AJ035TNTDKH/AR

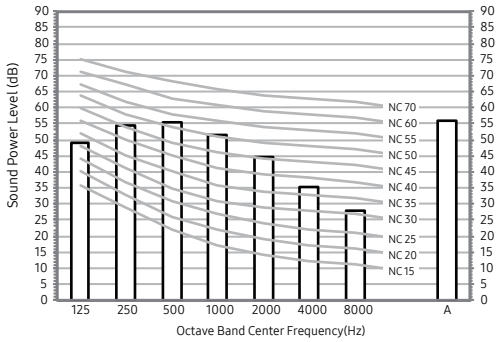

6) AJ050TNTDKH/AR

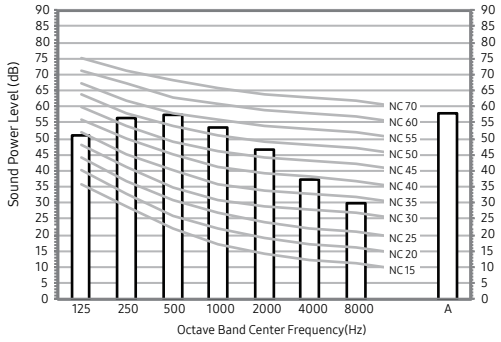

7) AJ068TNTDKH/AR

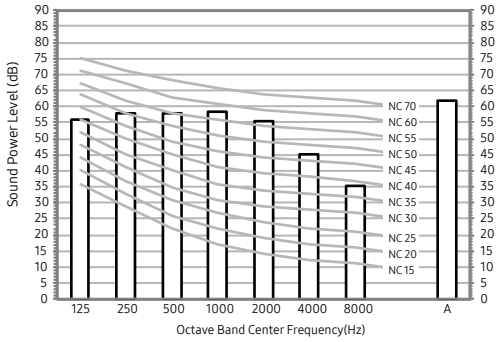

8. Sound Data

8-4. Indoor unit

Sound Power level

3 (Wind-Free) 1Way Cassette

Unit: dB(A)

Model	High
AJ026TN1DKH/EA	50
AJ035TN1DKH/EA	55

NOTE

- Specifications may be subject to change without prior notice
  - Sound power level is an absolute value that a sound source generates.
  - dBA = A-weighted sound power level.
  - Reference power : 1pW.
  - Measured according to ISO 3741.

1) AJ026TN1DKH/EA

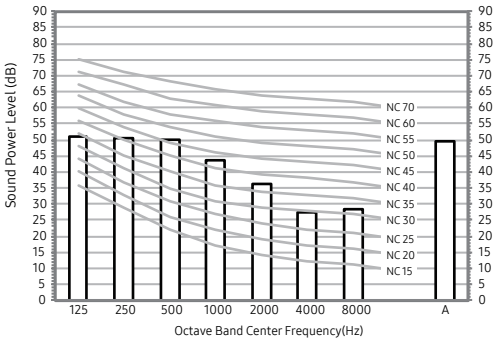

2) AJ035TN1DKH/EA

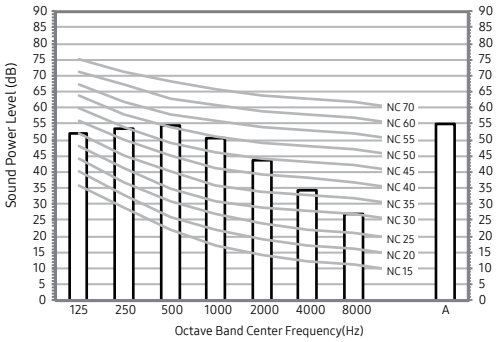

8. Sound Data

8-4. Indoor unit

Sound Power level

4 (Wind-Free) 4Way Cassette(600x600)

NOTE

- Specifications may be subject to change without prior notice
  - Sound power level is an absolute value that a sound source generates.
  - dBA = A-weighted sound power level.
  - Reference power : 1pW.
  - Measured according to ISO 3741.

Unit: dB(A)

Model	High
AJ020TNNDKH/EA	49
AJ026TNNDKH/EA	49
AJ035TNNDKH/EA	53
AJ052TNNDKH/EA	55

1) AJ020TNNDKH/EA

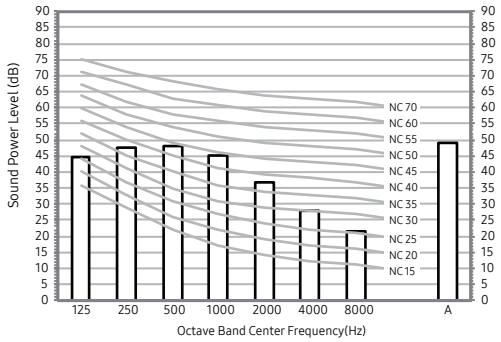

2) AJ026TNNDKH/EA

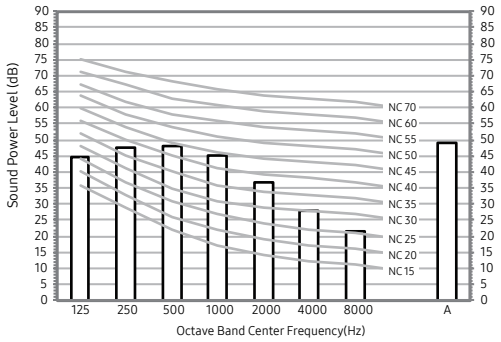

3) AJ035TNNDKH/EA

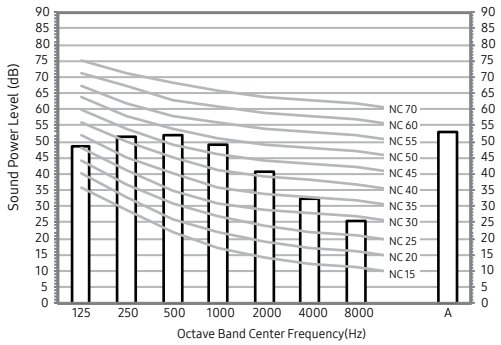

4) AJ052TNNDKH/EA

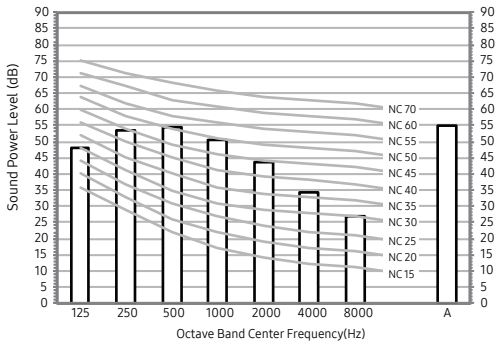

8. Sound Data

8-4. Indoor unit

Sound Power level

5 Home Duct

NOTE

- Specifications may be subject to change without prior notice
  - Sound power level is an absolute value that a sound source generates.
  - dBA = A-weighted sound power level.
  - Reference power : 1pW.
  - Measured according to ISO 3741.

Unit: dB(A)

Model	High
AJ026TNL*KH/EA	50
AJ035TNL*KH/EA	50
AJ052TNL*KH/EA	50
AJ071TNL*KH/EA	56

1) AJ026TNL*KH/EA

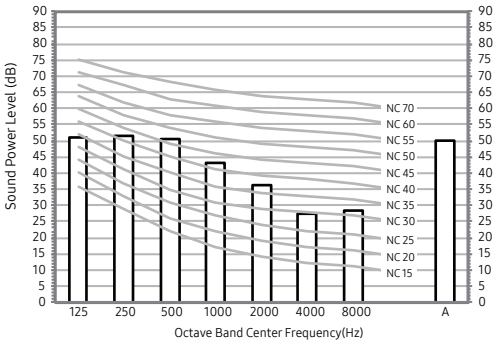

2) AJ035TNL*KH/EA

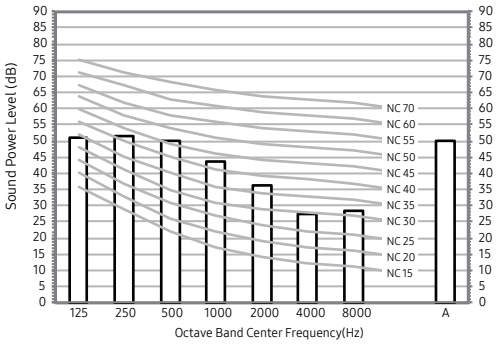

3) AJ052TNL*KH/EA

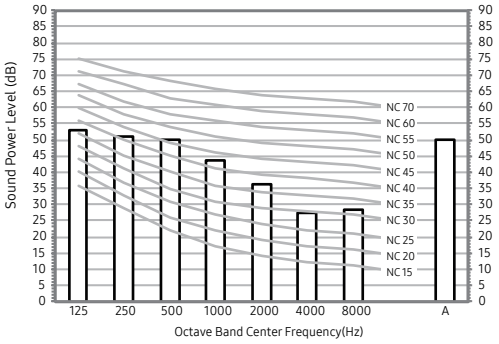

4) AJ071TNL*KH/EA

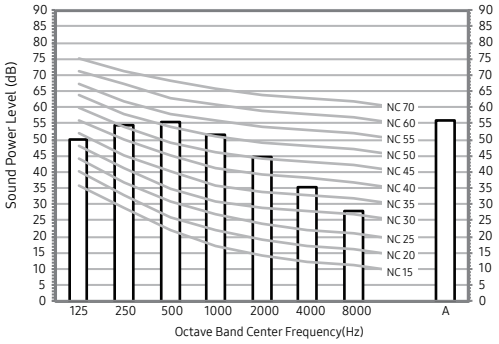

9. Fan Characteristics (PQ curve)

1) AJ026TNL*KH/EA

①	External Static Pressure(mmAq)	Option Code
	SP = 0	01017C-1C1456-271A1D-370000

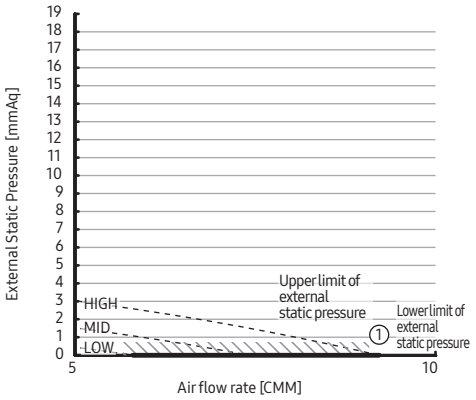

②	External Static Pressure(mmAq)	Option Code
	0<SP≤1.0	01017C-1C1479-271A1D-370000

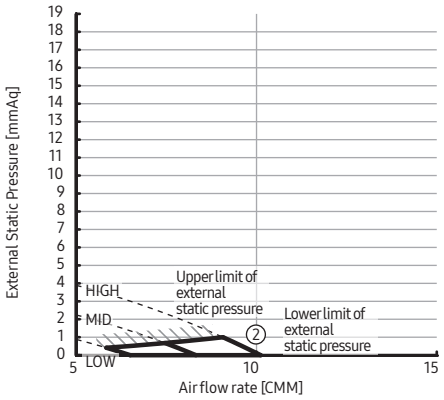

③	External Static Pressure(mmAq)	Option Code
	1.0<SP≤2.0	01017C-1C14EB-271A1D-370000

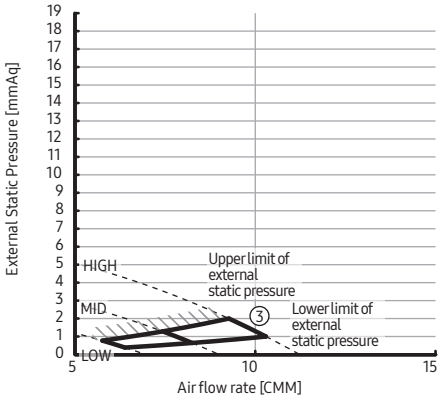

④	External Static Pressure(mmAq)	Option Code
	2.0<SP≤3.0	01017C-1C182D-271A1D-370000

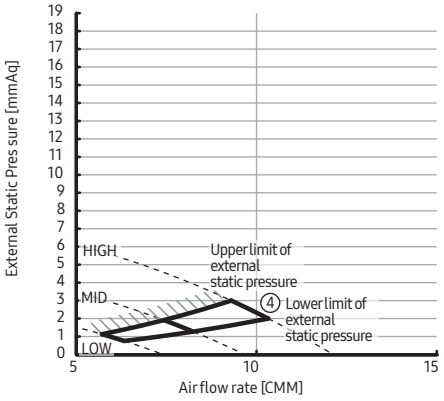

9. Fan Characteristics (PQ curve)

2) AJ035TNL*KH/EA

①	External Static Pressure(mmAq)	Option Code
	SP = 0	01017C-1C1479-272326-370000

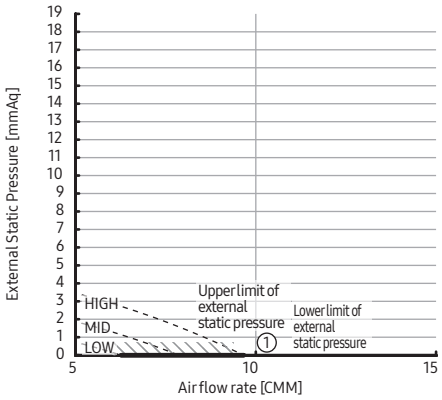

②	External Static Pressure(mmAq)	Option Code
	0<SP≤1.0	01017C-1C149B-272326-370000

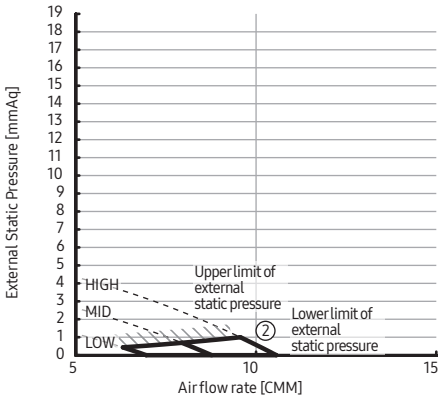

③	External Static Pressure(mmAq)	Option Code
	1.0<SP≤2.0	01017C-1C14FD-272326-370000

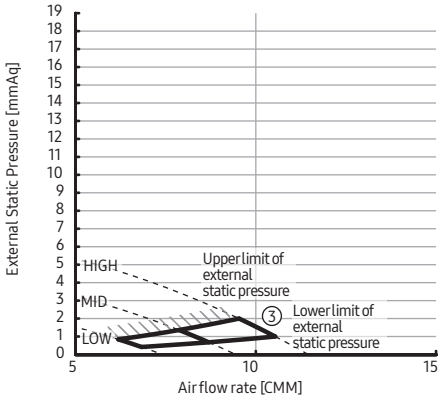

④	External Static Pressure(mmAq)	Option Code
	2.0<SP≤3.0	01017C-1C1930-272326-370000

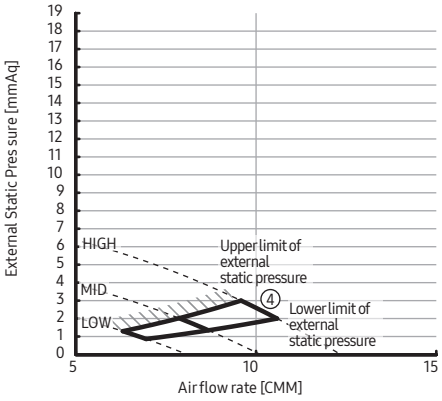

9. Fan Characteristics (PQ curve)

3) AJ052TNL*KH/EA

①	External Static Pressure(mmAq)	Option Code
	SP=0	01017C-1C54A8-273538-370000

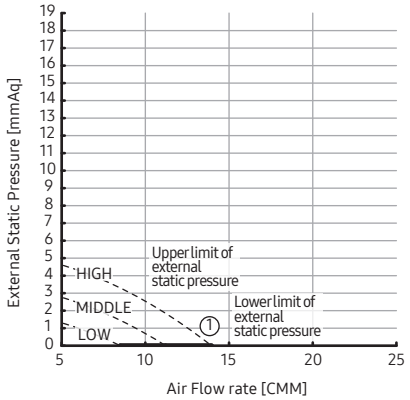

②	External Static Pressure(mmAq)	Option Code
	0 < SP≤1.0	01017C-1C54EB-273538-370000

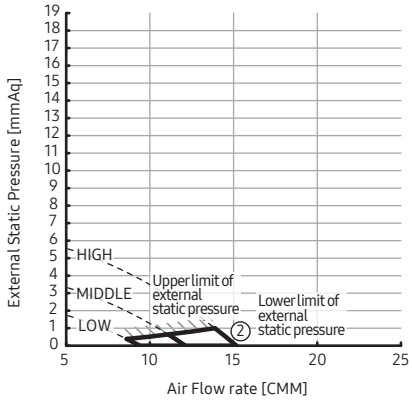

③	External Static Pressure(mmAq)	Option Code
	1.0 < SP≤2.0	01017C-1C582d-273538-370000

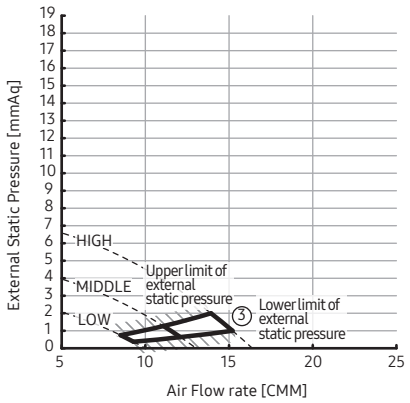

④	External Static Pressure(mmAq)	Option Code
	2.0 < SP≤3.0	01017C-1C5960-273538-370000

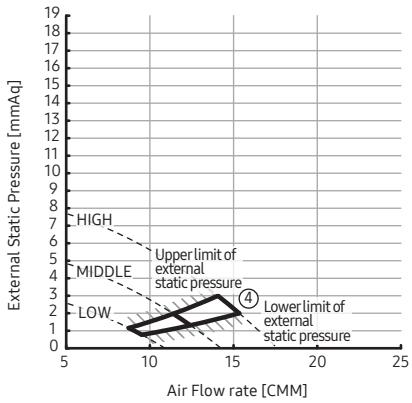

⑤	External Static Pressure(mmAq)	Option Code
	3.0 < SP≤4.0	01017C-1C5992-273538-370000

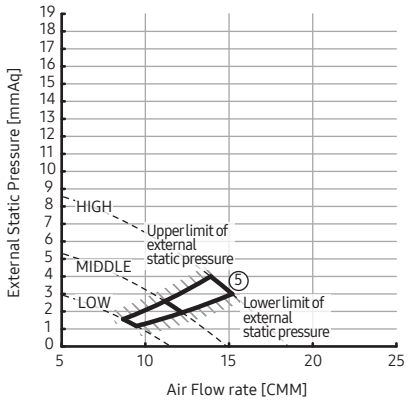

⑥	External Static Pressure(mmAq)	Option Code
	4.0 < SP≤5.1	01017C-1C59D3-273538-370000

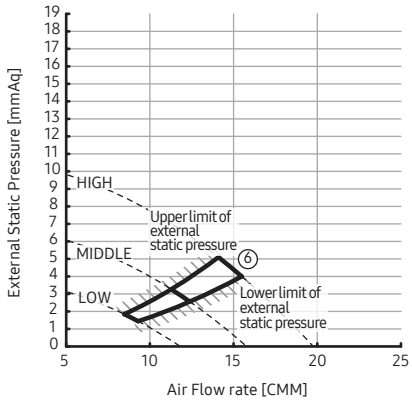

9. Fan Characteristics (PQ curve)

4) AJ071TNL*KH/EA

①	External Static Pressure(mmAq)	Option Code
	SP=0	01C17C-1C5932-274850-370000

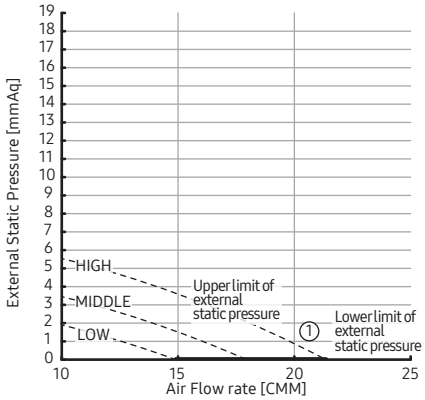

②	External Static Pressure(mmAq)	Option Code
	0 < SP≤1.0	01C17C-1C5975-274850-370000

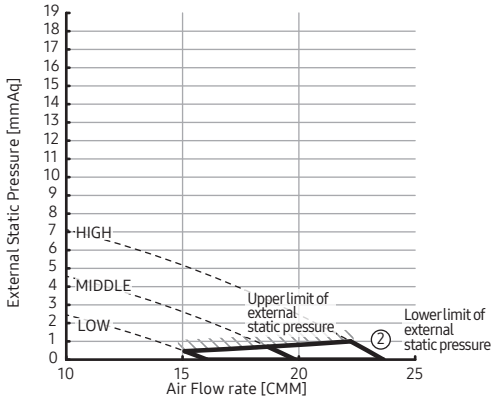

③	External Static Pressure(mmAq)	Option Code
	1.0 < SP≤2.0	01C17C-1C59A7-274850-370000

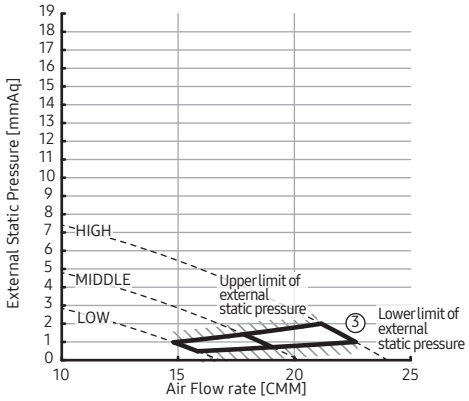

④	External Static Pressure(mmAq)	Option Code
	2.0 < SP≤3.0	01C17C-1C59D9-274850-370000

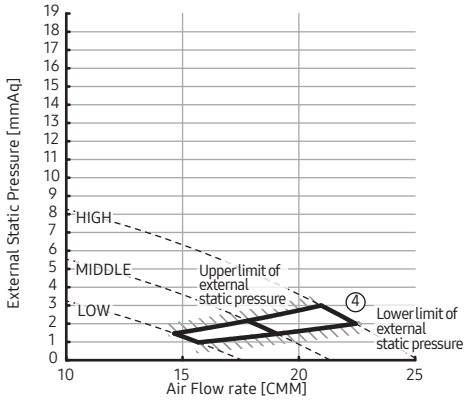

⑤	External Static Pressure(mmAq)	Option Code
	3.0 < SP≤4.0	01C17C-1C59FC-274850-370000

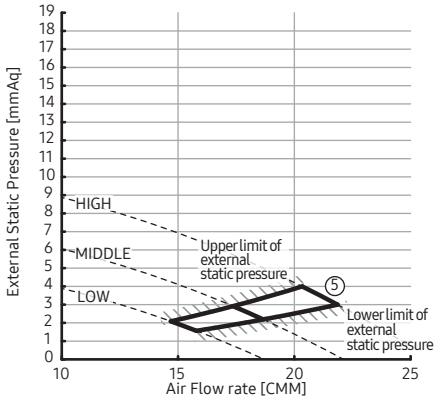

⑥	External Static Pressure(mmAq)	Option Code
	4.0 < SP≤5.1	01C17C-1C5D2E-274850-370000

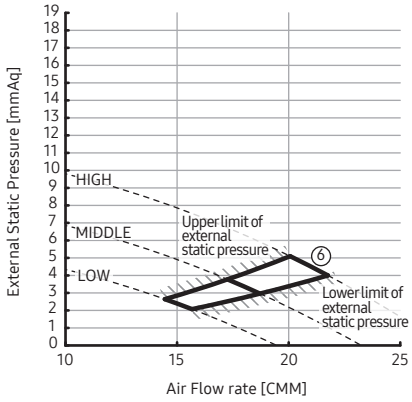

10. Operation Range

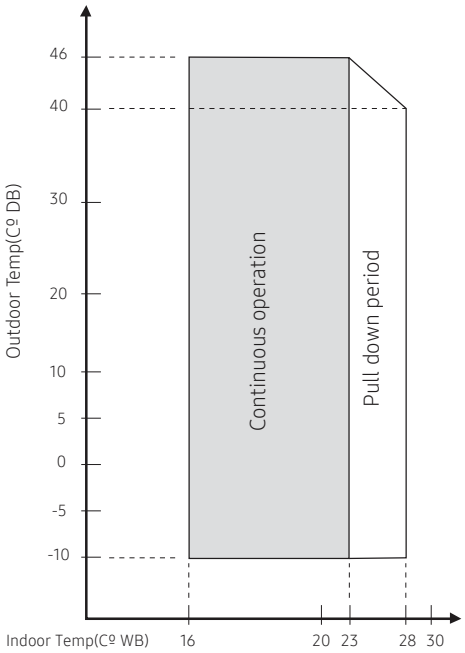

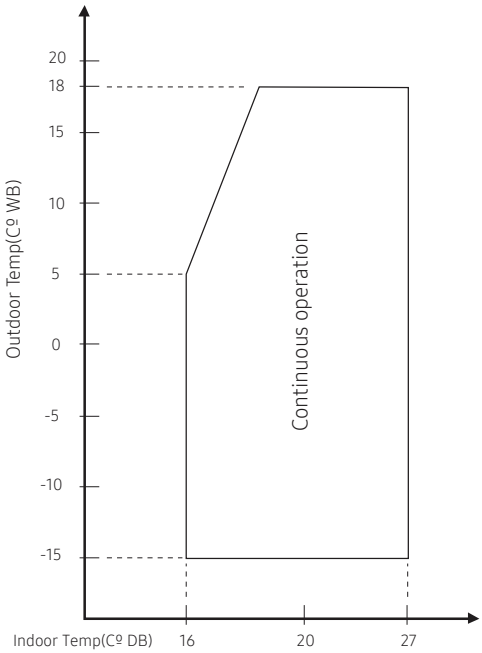

The graphs are based on the following conditions.

1. Equivalent piping length
2. Level difference 0m
3. Air flow rate High

11. Piping Diagram

AJ040TXJ2KH/EA, AJ050TXJ2KH/EA

Cooling System

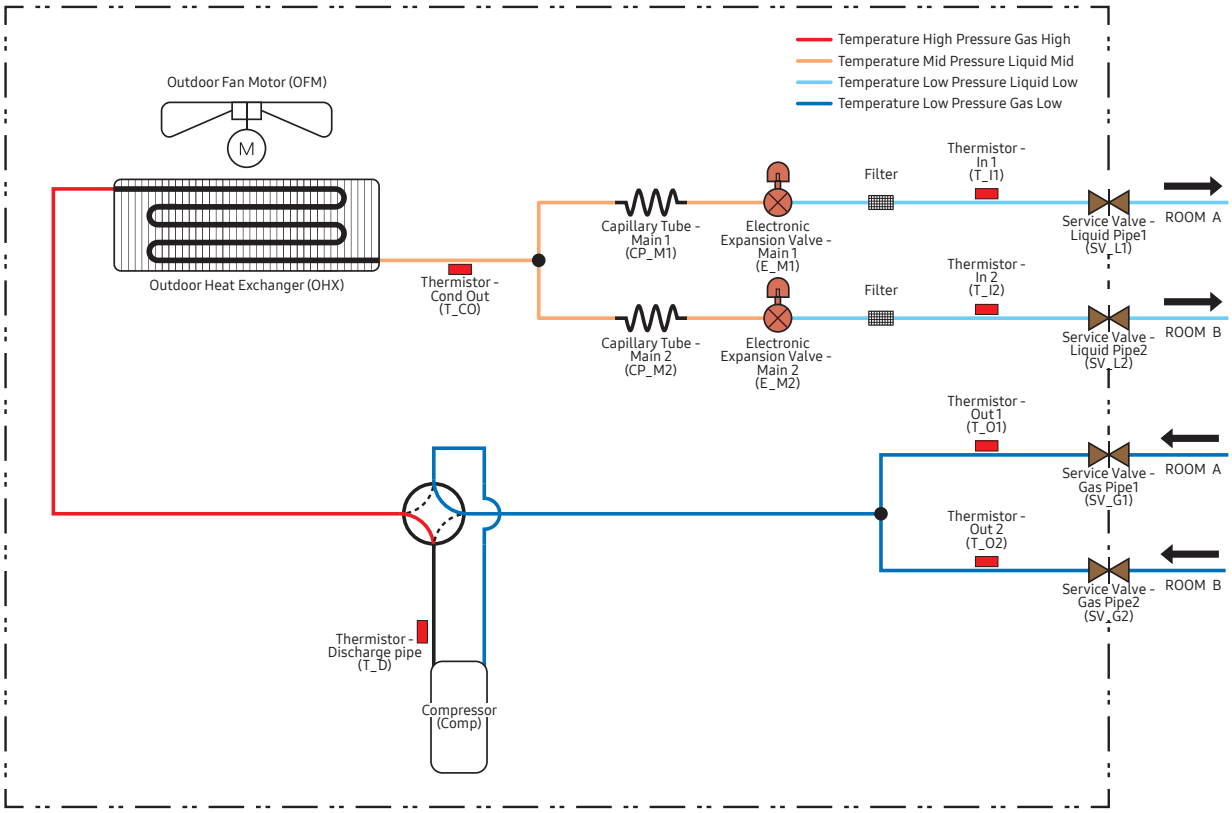

Heating System

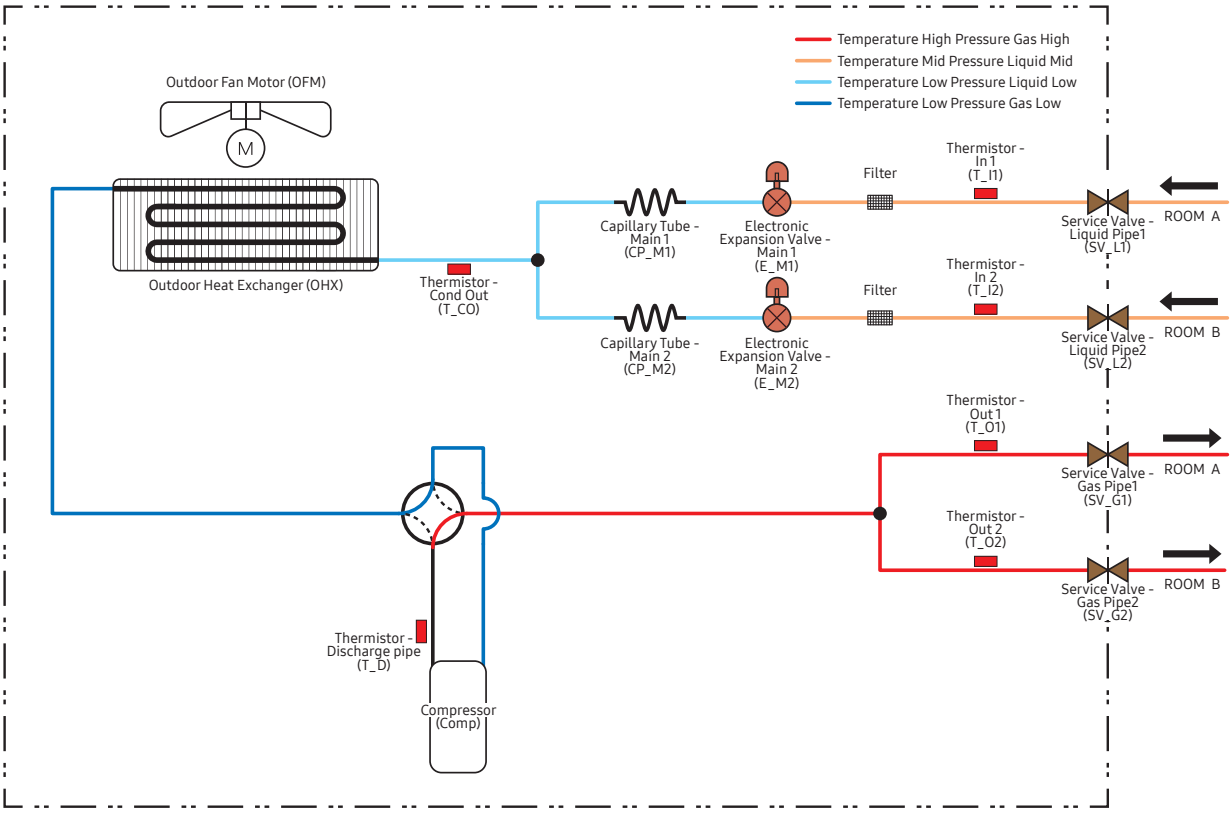

11. Piping Diagram

AJ068TXJ3KH/EA

Cooling System

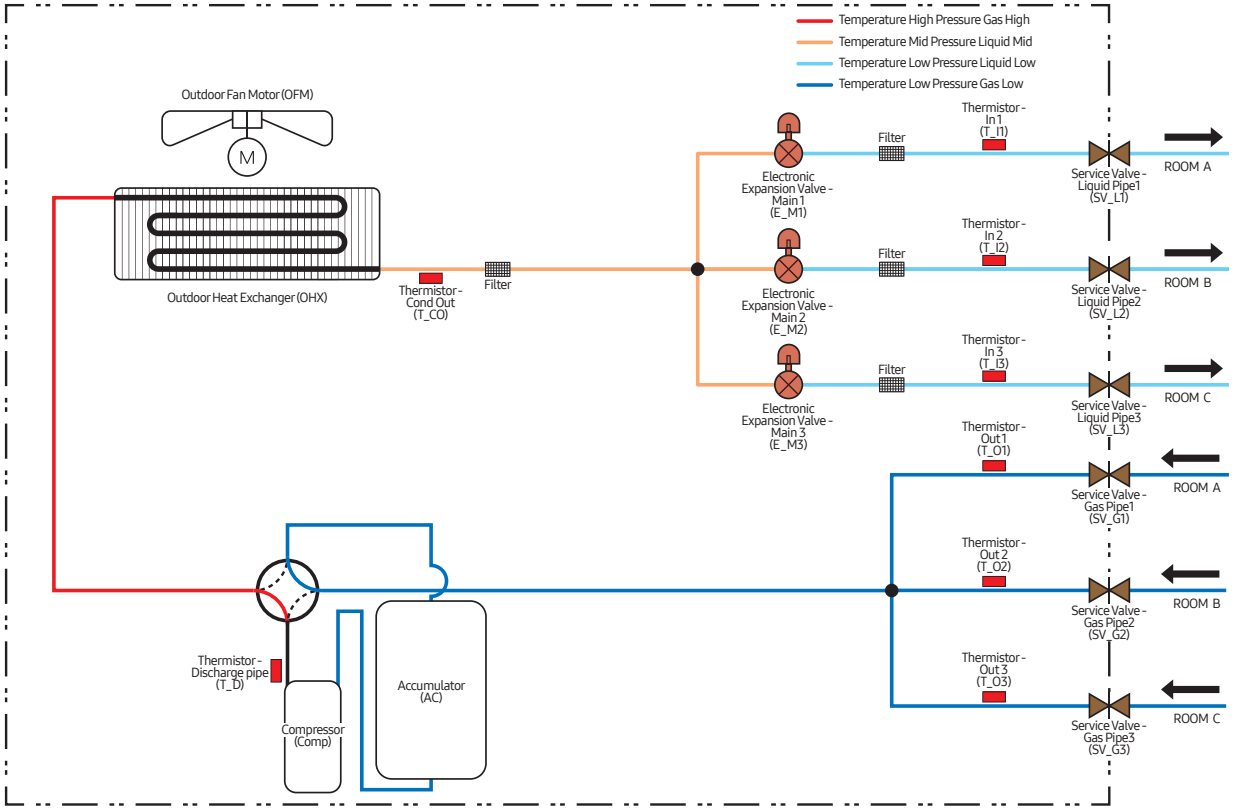

Heating System

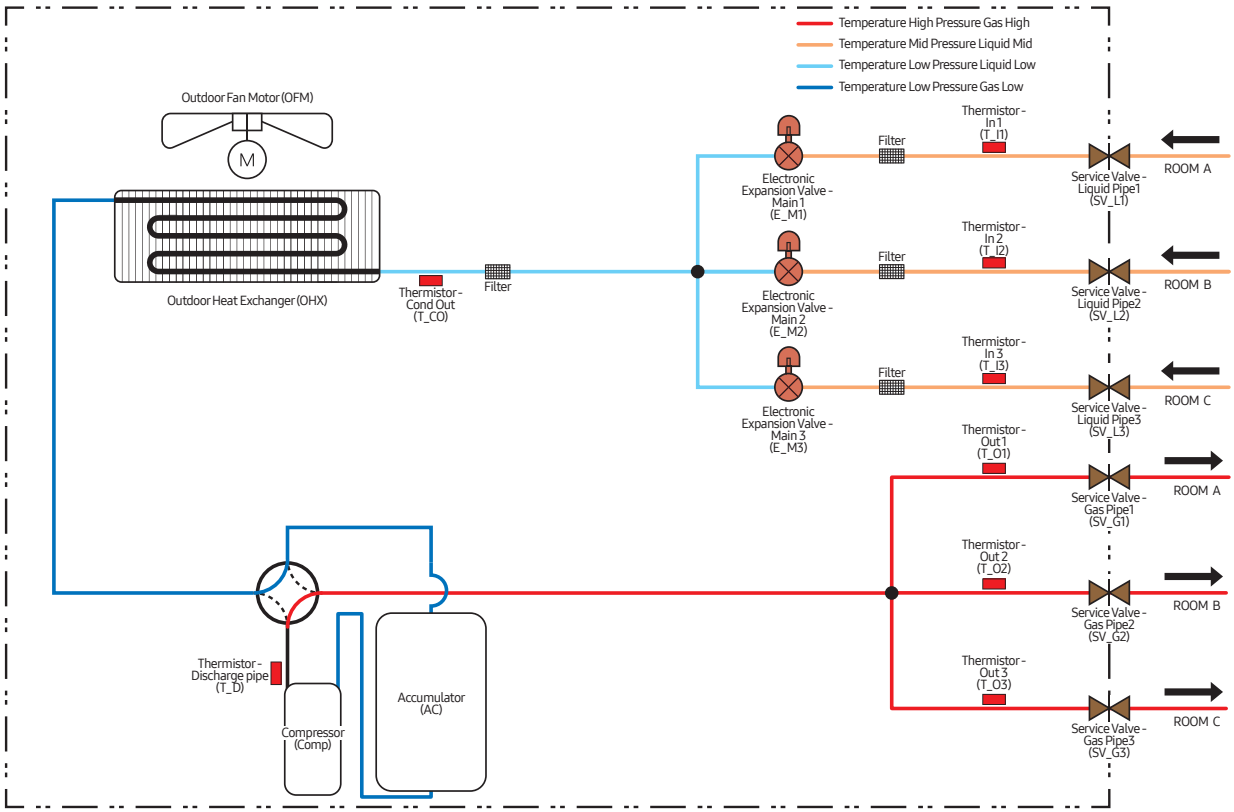

11. Piping Diagram

AJ080TXJ4KH/EA

Cooling System

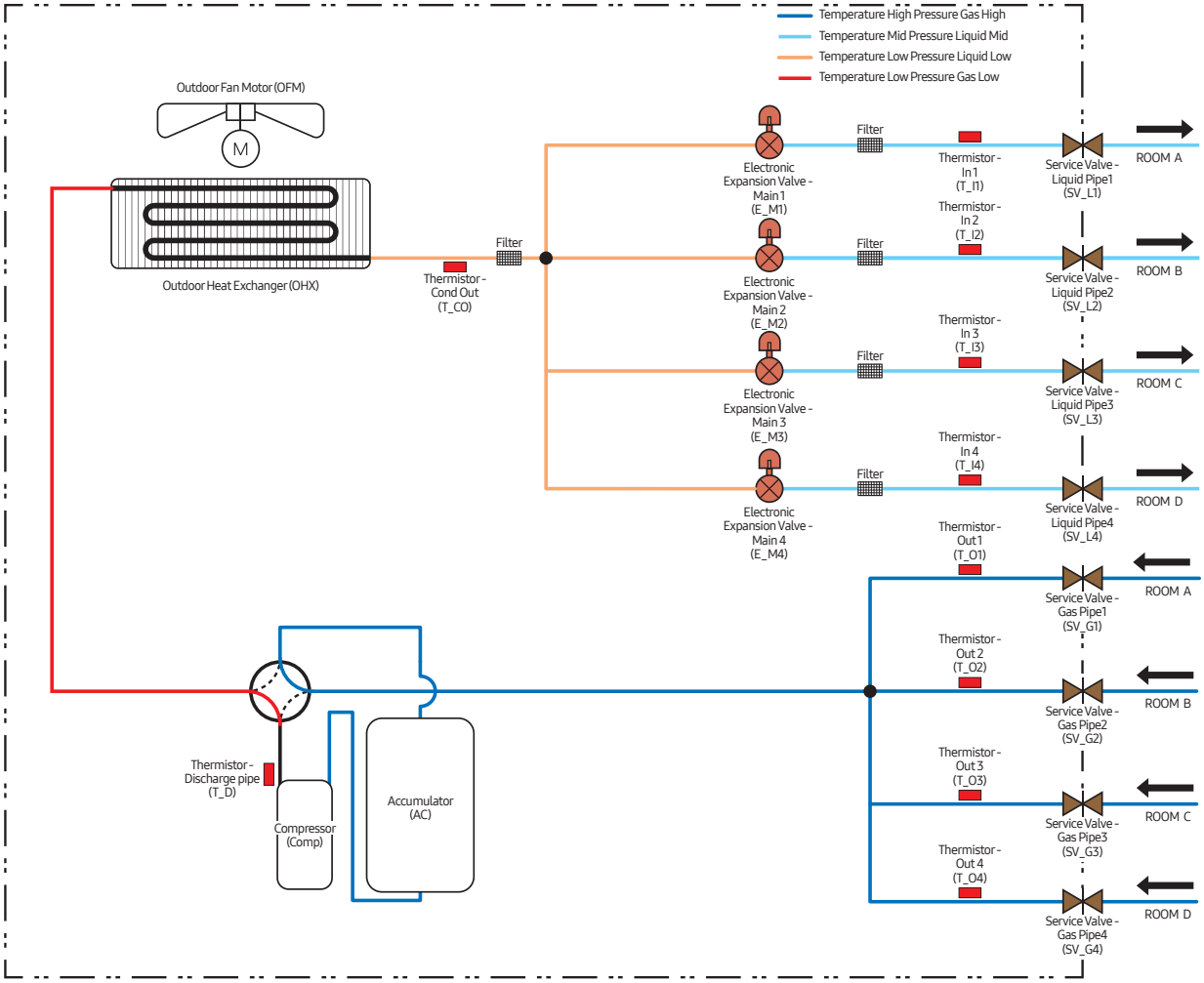

11. Piping Diagram

AJ080TXJ4KH/EA

Heating System

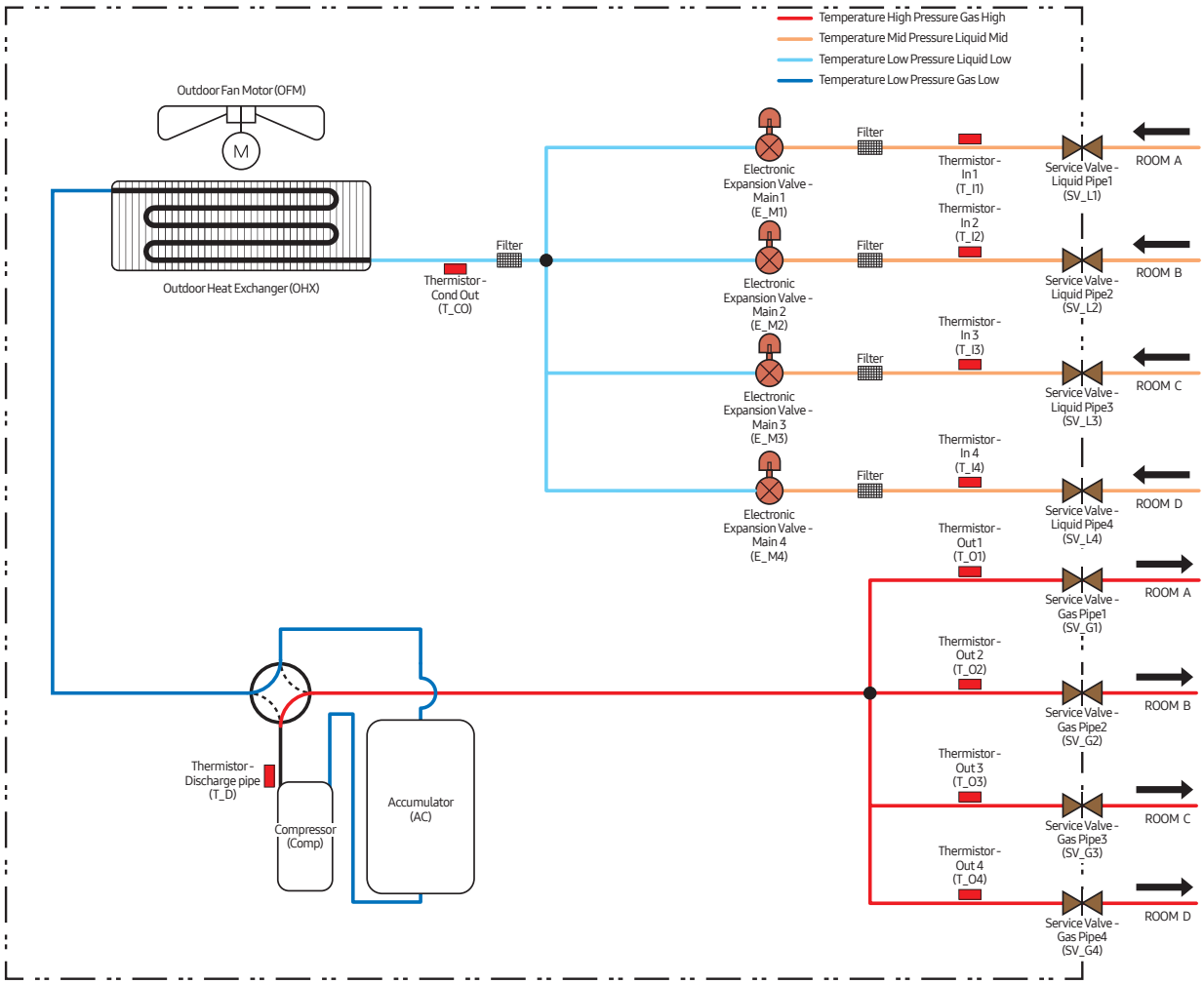

11. Piping Diagram

AJ100TXJ5KH/EA

Cooling System

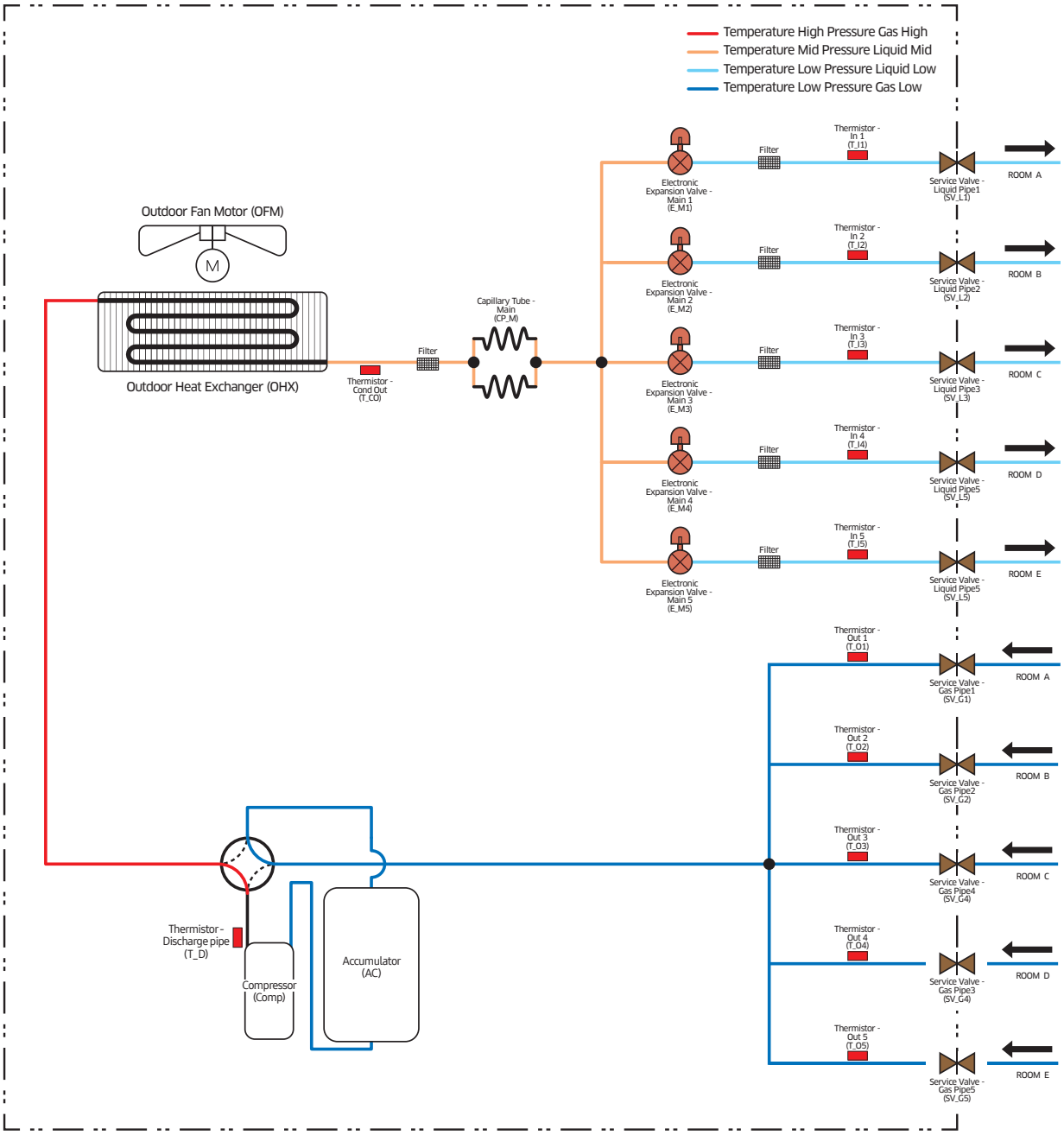

11. Piping Diagram

AJ100TXJ5KH/EA

Heating System

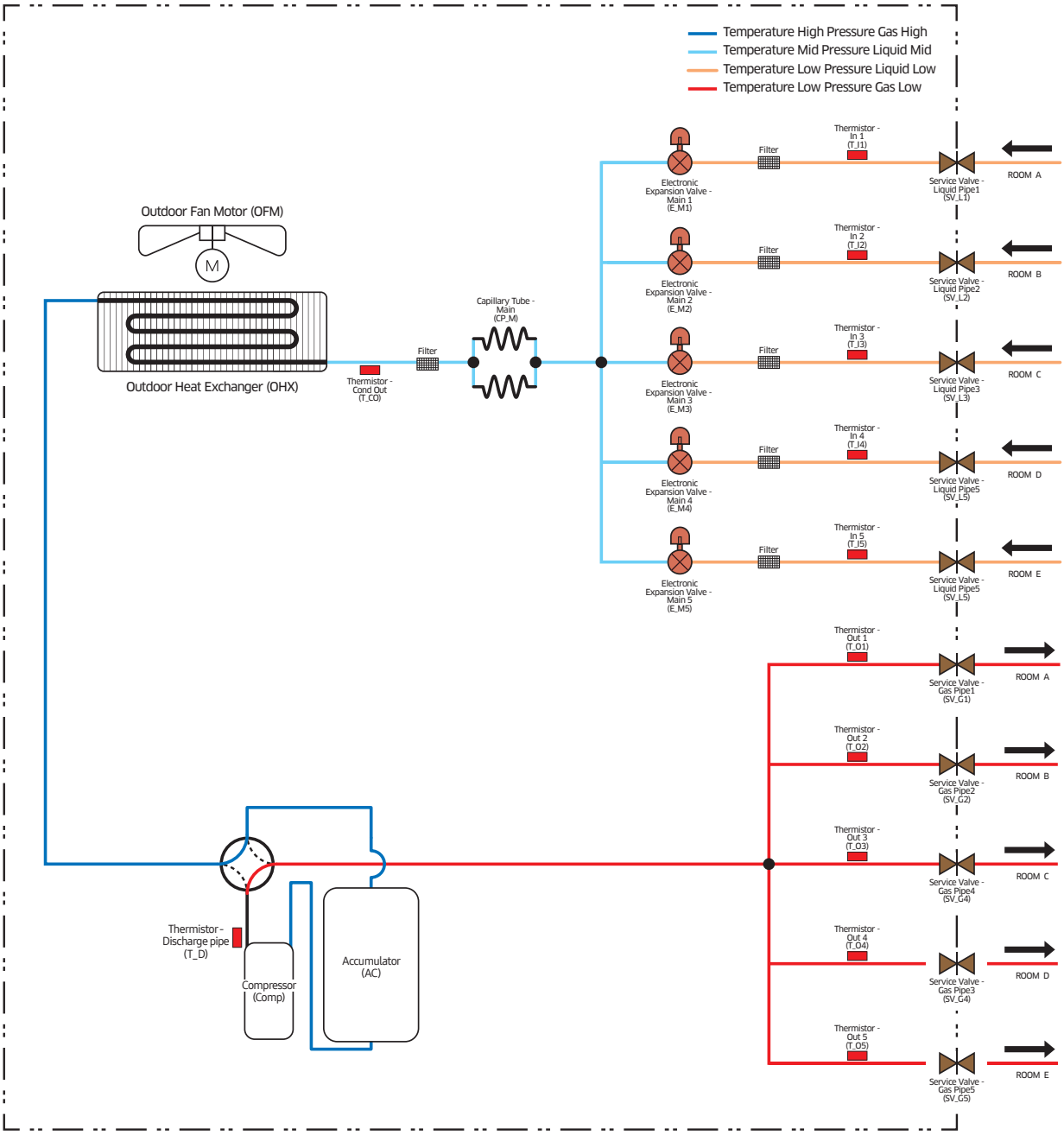

11. Piping Diagram

AJ125TXJ5KH/EA, AJ140TXJ5KH/EA

Cooling System

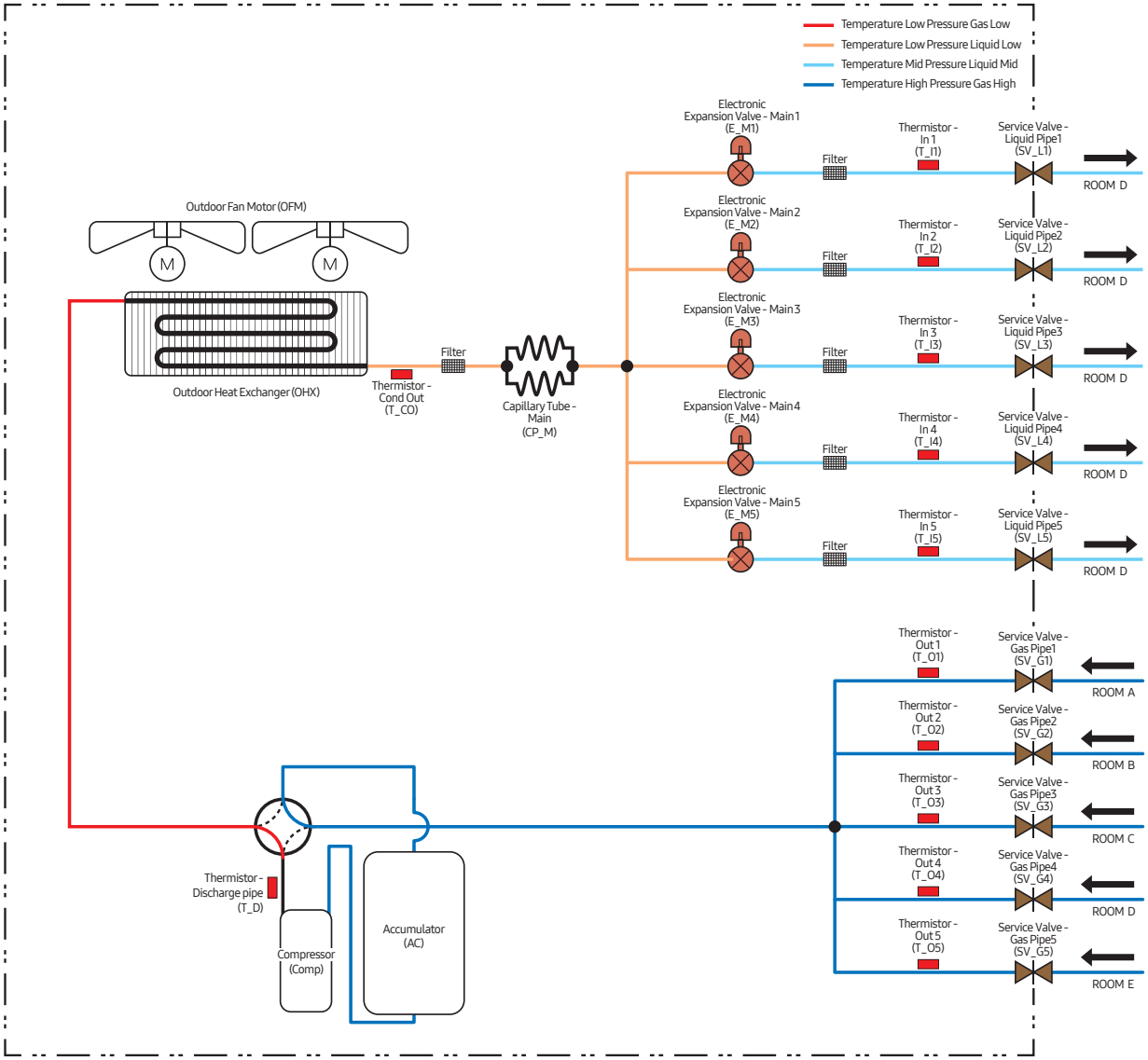

.

11. Piping Diagram

AJ125TXJ5KH/EA, AJ140TXJ5KH/EA

Heating System

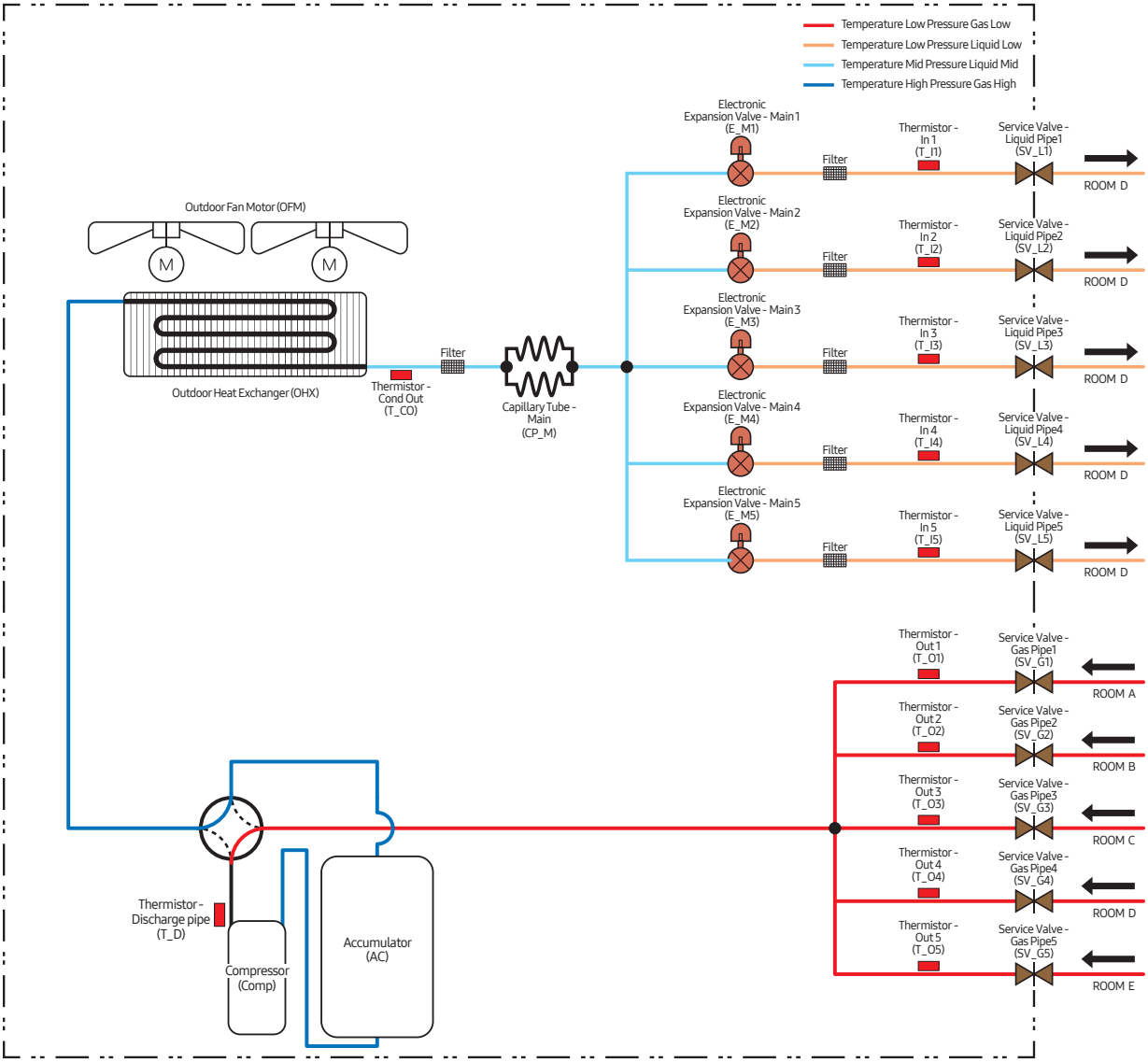

12. Capacity Table

12-1. AJ040TXJ2KH/EA

COOLING

Combination (Capacity Index)				Combination (Total)	Combination (%)	Outdoor Temperature (°C,DB)	Indoor Temperature (°C, WB)													
							14		16		18		19		20		22		24	
							TC(kW)	PI(kW)	TC(kW)	PI(kW)	TC(kW)	PI(kW)	TC(kW)	PI(kW)	TC(kW)	PI(kW)	TC(kW)	PI(kW)	TC(kW)	PI(kW)
						10	1.60	0.42	2.32	0.47	2.42	0.51	2.46	0.53	2.51	0.54	2.61	0.57	2.71	0.59
						12	1.60	0.44	2.28	0.49	2.38	0.53	2.43	0.54	2.48	0.56	2.57	0.58	2.67	0.60
						14	1.60	0.46	2.24	0.51	2.34	0.54	2.39	0.56	2.44	0.57	2.53	0.60	2.63	0.61
						16	1.60	0.48	2.21	0.52	2.30	0.56	2.35	0.57	2.40	0.59	2.50	0.61	2.59	0.63
						18	1.60	0.50	2.17	0.54	2.27	0.58	2.31	0.59	2.36	0.60	2.46	0.62	2.55	0.64
						20	1.60	0.52	2.13	0.56	2.23	0.59	2.28	0.61	2.32	0.62	2.42	0.64	2.52	0.65
						21	1.60	0.53	2.12	0.57	2.21	0.60	2.26	0.62	2.30	0.63	2.40	0.65	2.50	0.66
						23	1.60	0.55	2.08	0.59	2.17	0.62	2.22	0.63	2.27	0.64	2.36	0.66	2.46	0.67
						25	1.60	0.57	2.04	0.61	2.14	0.64	2.18	0.65	2.23	0.66	2.32	0.67	2.42	0.68
2000				2000	50%	27	1.60	0.59	2.01	0.63	2.10	0.66	2.15	0.67	2.19	0.68	2.29	0.69	2.38	0.70
						29	1.60	0.62	1.97	0.65	2.06	0.67	2.11	0.68	2.16	0.69	2.25	0.71	2.34	0.71
						31	1.60	0.64	1.94	0.67	2.03	0.69	2.07	0.70	2.12	0.71	2.21	0.72	2.30	0.72
						33	1.60	0.66	1.90	0.69	1.99	0.71	2.04	0.72	2.08	0.73	2.17	0.74	2.27	0.74
						35	1.60	0.68	1.86	0.71	1.95	0.73	2.00	0.73	2.04	0.75	2.14	0.75	2.23	0.75
						37	1.60	0.71	1.83	0.73	1.92	0.75	1.96	0.76	2.01	0.76	2.10	0.77	2.19	0.77
						39	1.60	0.73	1.79	0.75	1.88	0.77	1.93	0.78	1.97	0.78	2.06	0.79	2.15	0.78
						42	1.58	0.76	1.74	0.79	1.83	0.80	1.87	0.81	1.92	0.81	2.01	0.81	2.10	0.81
						44	1.50	0.79	1.71	0.81	1.79	0.82	1.84	0.83	1.88	0.83	1.97	0.83	2.06	0.82
						46	1.46	0.81	1.67	0.83	1.76	0.84	1.80	0.85	1.84	0.85	1.93	0.85	2.02	0.84
						10	2.00	0.46	2.90	0.52	3.02	0.56	3.08	0.58	3.14	0.60	3.26	0.63	3.39	0.65
						12	2.00	0.48	2.85	0.53	2.97	0.58	3.03	0.60	3.09	0.61	3.22	0.64	3.34	0.66
						14	2.00	0.51	2.80	0.55	2.93	0.60	2.99	0.61	3.05	0.63	3.17	0.65	3.29	0.67
						16	2.00	0.53	2.76	0.57	2.88	0.61	2.94	0.63	3.00	0.65	3.12	0.67	3.24	0.69
						18	2.00	0.55	2.71	0.59	2.83	0.63	2.89	0.65	2.95	0.66	3.07	0.68	3.19	0.70
						20	2.00	0.57	2.67	0.61	2.79	0.65	2.85	0.67	2.90	0.68	3.02	0.70	3.14	0.71
						21	2.00	0.58	2.64	0.62	2.76	0.66	2.82	0.67	2.88	0.69	3.00	0.71	3.12	0.72
						23	2.00	0.61	2.60	0.65	2.72	0.68	2.78	0.69	2.83	0.71	2.95	0.72	3.07	0.73
						25	2.00	0.63	2.55	0.67	2.67	0.70	2.73	0.71	2.79	0.72	2.91	0.74	3.02	0.75
2500				2500	63%	27	2.00	0.65	2.51	0.69	2.62	0.72	2.68	0.73	2.74	0.74	2.86	0.76	2.98	0.76
						29	2.00	0.68	2.46	0.71	2.58	0.74	2.64	0.75	2.69	0.76	2.81	0.77	2.93	0.78
						31	2.00	0.70	2.42	0.73	2.53	0.76	2.59	0.77	2.65	0.78	2.76	0.79	2.88	0.79
						33	2.00	0.72	2.37	0.76	2.49	0.78	2.54	0.79	2.60	0.80	2.72	0.81	2.83	0.81
						35	2.00	0.75	2.33	0.78	2.44	0.80	2.50	0.80	2.56	0.82	2.67	0.83	2.78	0.83
						37	2.00	0.77	2.29	0.80	2.40	0.82	2.45	0.83	2.51	0.84	2.62	0.84	2.74	0.84
						39	2.00	0.80	2.24	0.83	2.35	0.85	2.41	0.85	2.46	0.86	2.58	0.86	2.69	0.86
						42	1.98	0.84	2.18	0.86	2.29	0.88	2.34	0.88	2.40	0.89	2.51	0.89	2.62	0.88
						44	1.88	0.86	2.13	0.89	2.24	0.90	2.30	0.91	2.35	0.91	2.46	0.91	2.57	0.90
						46	1.83	0.89	2.09	0.91	2.20	0.93	2.25	0.93	2.30	0.93	2.41	0.93	2.53	0.92

12. Capacity Table

12-1. AJ040TXJ2KH/EA

COOLING

Combination (Capacity Index)				Combination (Total)	Combination (%)	Outdoor Temperature (°C,DB)	Indoor Temperature (°C, WB)													
							14		16		18		19		20		22		24	
							TC(kW)	PI(kW)	TC(kW)	PI(kW)	TC(kW)	PI(kW)	TC(kW)	PI(kW)	TC(kW)	PI(kW)	TC(kW)	PI(kW)	TC(kW)	PI(kW)
3500				3500	88%	10	2.80	0.63	4.06	0.70	4.23	0.76	4.31	0.79	4.40	0.81	4.57	0.85	4.74	0.88
						12	2.80	0.66	3.99	0.73	4.16	0.79	4.25	0.81	4.33	0.83	4.50	0.87	4.68	0.90
						14	2.80	0.69	3.93	0.75	4.10	0.81	4.18	0.83	4.26	0.86	4.44	0.89	4.61	0.92
						16	2.80	0.72	3.86	0.78	4.03	0.84	4.11	0.86	4.20	0.88	4.37	0.91	4.54	0.93
						18	2.80	0.75	3.80	0.81	3.96	0.86	4.05	0.88	4.13	0.90	4.30	0.93	4.47	0.95
						20	2.80	0.78	3.73	0.84	3.90	0.89	3.98	0.91	4.07	0.92	4.23	0.95	4.40	0.97
						21	2.80	0.79	3.70	0.85	3.87	0.90	3.95	0.92	4.03	0.94	4.20	0.96	4.37	0.98
						23	2.80	0.82	3.64	0.88	3.80	0.93	3.89	0.94	3.97	0.96	4.13	0.99	4.30	1.00
						25	2.80	0.86	3.58	0.91	3.74	0.95	3.82	0.97	3.90	0.99	4.07	1.01	4.23	1.02
						27	2.80	0.89	3.51	0.94	3.67	0.98	3.76	1.00	3.84	1.01	4.00	1.03	4.17	1.04
						29	2.80	0.92	3.45	0.97	3.61	1.01	3.69	1.02	3.77	1.04	3.93	1.05	4.10	1.06
						31	2.80	0.95	3.39	1.00	3.55	1.04	3.63	1.05	3.71	1.06	3.87	1.08	4.03	1.08
						33	2.80	0.99	3.32	1.03	3.48	1.06	3.56	1.08	3.64	1.09	3.80	1.10	3.97	1.10
						35	2.80	1.02	3.26	1.06	3.42	1.09	3.50	1.09	3.58	1.11	3.74	1.12	3.90	1.12
						37	2.80	1.05	3.20	1.09	3.36	1.12	3.43	1.13	3.51	1.14	3.67	1.15	3.83	1.15
						39	2.80	1.09	3.14	1.13	3.29	1.15	3.37	1.16	3.45	1.17	3.61	1.17	3.77	1.17
						42	2.77	1.14	3.05	1.17	3.20	1.20	3.28	1.21	3.35	1.21	3.51	1.21	3.67	1.21
						44	2.63	1.18	2.98	1.21	3.14	1.23	3.21	1.24	3.29	1.24	3.45	1.24	3.60	1.23
						46	2.56	1.21	2.92	1.24	3.07	1.26	3.15	1.27	3.23	1.27	3.38	1.27	3.54	1.25
2000	2000			4000	100%	10	3.53	0.83	4.99	0.85	5.08	0.87	5.14	0.88	5.20	0.89	5.35	0.91	5.52	0.93
						12	3.53	0.85	4.85	0.87	4.95	0.89	5.01	0.90	5.08	0.91	5.23	0.93	5.41	0.95
						14	3.53	0.87	4.72	0.89	4.83	0.91	4.89	0.92	4.96	0.93	5.12	0.95	5.31	0.97
						16	3.53	0.89	4.60	0.91	4.71	0.93	4.78	0.94	4.85	0.95	5.02	0.97	5.21	0.99
						18	3.53	0.92	4.48	0.94	4.60	0.96	4.67	0.97	4.75	0.98	4.92	0.99	5.12	1.01
						20	3.53	0.94	4.36	0.96	4.49	0.98	4.57	0.99	4.65	1.00	4.83	1.02	5.03	1.04
						21	3.53	0.95	4.31	0.97	4.44	0.99	4.52	1.00	4.60	1.01	4.78	1.03	4.99	1.05
						23	3.53	0.98	4.20	1.00	4.34	1.02	4.42	1.03	4.51	1.03	4.70	1.05	4.91	1.07
						25	3.53	1.00	4.10	1.02	4.25	1.04	4.33	1.05	4.42	1.06	4.62	1.08	4.84	1.10
						27	3.53	1.03	4.01	1.05	4.16	1.07	4.25	1.08	4.34	1.08	4.55	1.10	4.78	1.12
						29	3.53	1.05	3.92	1.07	4.08	1.09	4.17	1.10	4.27	1.11	4.48	1.13	4.72	1.15
						31	3.53	1.08	3.84	1.10	4.01	1.12	4.10	1.13	4.20	1.14	4.42	1.16	4.66	1.17
						33	3.53	1.11	3.76	1.13	3.94	1.15	4.03	1.16	4.13	1.16	4.36	1.18	4.61	1.20
						35	3.53	1.13	3.69	1.15	3.87	1.17	4.00	1.18	4.08	1.19	4.31	1.21	4.57	1.23
						37	3.53	1.16	3.62	1.18	3.81	1.20	3.91	1.21	4.02	1.22	4.26	1.24	4.53	1.26
						39	3.53	1.19	3.56	1.21	3.76	1.23	3.86	1.24	3.98	1.25	4.22	1.27	4.49	1.28
						42	3.53	1.24	3.48	1.26	3.69	1.28	3.80	1.29	3.92	1.29	4.17	1.31	4.46	1.33
						44	3.53	1.27	3.44	1.29	3.65	1.31	3.76	1.32	3.89	1.32	4.15	1.34	4.44	1.36
						46	3.53	1.30	3.39	1.32	3.61	1.34	3.73	1.35	3.86	1.36	4.13	1.37	4.42	1.39

12. Capacity Table

12-1. AJ040TXJ2KH/EA

COOLING

Combination (Capacity Index)				Combination (Total)	Combination (%)	Outdoor Temperature (°C,DB)	Indoor Temperature (°C, WB)													
							14		16		18		19		20		22		24	
							TC(kW)	PI(kW)	TC(kW)	PI(kW)	TC(kW)	PI(kW)	TC(kW)	PI(kW)	TC(kW)	PI(kW)	TC(kW)	PI(kW)	TC(kW)	PI(kW)
2000	2500			4500	113%	10	3.53	0.83	4.99	0.85	5.08	0.87	5.14	0.88	5.20	0.89	5.35	0.91	5.52	0.93
						12	3.53	0.85	4.85	0.87	4.95	0.89	5.01	0.90	5.08	0.91	5.23	0.93	5.41	0.95
						14	3.53	0.87	4.72	0.89	4.83	0.91	4.89	0.92	4.96	0.93	5.12	0.95	5.31	0.97
						16	3.53	0.89	4.60	0.91	4.71	0.93	4.78	0.94	4.85	0.95	5.02	0.97	5.21	0.99
						18	3.53	0.92	4.48	0.94	4.60	0.96	4.67	0.97	4.75	0.98	4.92	0.99	5.12	1.01
						20	3.53	0.94	4.36	0.96	4.49	0.98	4.57	0.99	4.65	1.00	4.83	1.02	5.03	1.04
						21	3.53	0.95	4.31	0.97	4.44	0.99	4.52	1.00	4.60	1.01	4.78	1.03	4.99	1.05
						23	3.53	0.98	4.20	1.00	4.34	1.02	4.42	1.03	4.51	1.03	4.70	1.05	4.91	1.07
						25	3.53	1.00	4.10	1.02	4.25	1.04	4.33	1.05	4.42	1.06	4.62	1.08	4.84	1.10
						27	3.53	1.03	4.01	1.05	4.16	1.07	4.25	1.08	4.34	1.08	4.55	1.10	4.78	1.12
						29	3.53	1.05	3.92	1.07	4.08	1.09	4.17	1.10	4.27	1.11	4.48	1.13	4.72	1.15
						31	3.53	1.08	3.84	1.10	4.01	1.12	4.10	1.13	4.20	1.14	4.42	1.16	4.66	1.17
						33	3.53	1.11	3.76	1.13	3.94	1.15	4.03	1.16	4.13	1.16	4.36	1.18	4.61	1.20
						35	3.53	1.13	3.69	1.15	3.87	1.17	4.00	1.18	4.08	1.19	4.31	1.21	4.57	1.23
						37	3.53	1.16	3.62	1.18	3.81	1.20	3.91	1.21	4.02	1.22	4.26	1.24	4.53	1.26
						39	3.53	1.19	3.56	1.21	3.76	1.23	3.86	1.24	3.98	1.25	4.22	1.27	4.49	1.28
						42	3.53	1.24	3.48	1.26	3.69	1.28	3.80	1.29	3.92	1.29	4.17	1.31	4.46	1.33
						44	3.53	1.27	3.44	1.29	3.65	1.31	3.76	1.32	3.89	1.32	4.15	1.34	4.44	1.36
						46	3.53	1.30	3.39	1.32	3.61	1.34	3.73	1.35	3.86	1.36	4.13	1.37	4.42	1.39
2000	3500			5500	138%	10	3.53	0.83	4.99	0.85	5.08	0.87	5.14	0.88	5.20	0.89	5.35	0.91	5.52	0.93
						12	3.53	0.85	4.85	0.87	4.95	0.89	5.01	0.90	5.08	0.91	5.23	0.93	5.41	0.95
						14	3.53	0.87	4.72	0.89	4.83	0.91	4.89	0.92	4.96	0.93	5.12	0.95	5.31	0.97
						16	3.53	0.89	4.60	0.91	4.71	0.93	4.78	0.94	4.85	0.95	5.02	0.97	5.21	0.99
						18	3.53	0.92	4.48	0.94	4.60	0.96	4.67	0.97	4.75	0.98	4.92	0.99	5.12	1.01
						20	3.53	0.94	4.36	0.96	4.49	0.98	4.57	0.99	4.65	1.00	4.83	1.02	5.03	1.04
						21	3.53	0.95	4.31	0.97	4.44	0.99	4.52	1.00	4.60	1.01	4.78	1.03	4.99	1.05
						23	3.53	0.98	4.20	1.00	4.34	1.02	4.42	1.03	4.51	1.03	4.70	1.05	4.91	1.07
						25	3.53	1.00	4.10	1.02	4.25	1.04	4.33	1.05	4.42	1.06	4.62	1.08	4.84	1.10
						27	3.53	1.03	4.01	1.05	4.16	1.07	4.25	1.08	4.34	1.08	4.55	1.10	4.78	1.12
						29	3.53	1.05	3.92	1.07	4.08	1.09	4.17	1.10	4.27	1.11	4.48	1.13	4.72	1.15
						31	3.53	1.08	3.84	1.10	4.01	1.12	4.10	1.13	4.20	1.14	4.42	1.16	4.66	1.17
						33	3.53	1.11	3.76	1.13	3.94	1.15	4.03	1.16	4.13	1.16	4.36	1.18	4.61	1.20
						35	3.53	1.13	3.69	1.15	3.87	1.17	4.00	1.18	4.08	1.19	4.31	1.21	4.57	1.23
						37	3.53	1.16	3.62	1.18	3.81	1.20	3.91	1.21	4.02	1.22	4.26	1.24	4.53	1.26
						39	3.53	1.19	3.56	1.21	3.76	1.23	3.86	1.24	3.98	1.25	4.22	1.27	4.49	1.28
						42	3.53	1.24	3.48	1.26	3.69	1.28	3.80	1.29	3.92	1.29	4.17	1.31	4.46	1.33
						44	3.53	1.27	3.44	1.29	3.65	1.31	3.76	1.32	3.89	1.32	4.15	1.34	4.44	1.36
						46	3.53	1.30	3.39	1.32	3.61	1.34	3.73	1.35	3.86	1.36	4.13	1.37	4.42	1.39

12. Capacity Table

12-1. AJ040TXJ2KH/EA

COOLING

Combination (Capacity Index)				Combination (Total)	Combination (%)	Outdoor Temperature (°C,DB)	Indoor Temperature (°C, WB)													
							14		16		18		19		20		22		24	
							TC(kW)	PI(kW)	TC(kW)	PI(kW)	TC(kW)	PI(kW)	TC(kW)	PI(kW)	TC(kW)	PI(kW)	TC(kW)	PI(kW)	TC(kW)	PI(kW)
2500	2500			5000	125%	10	3.53	0.83	4.99	0.85	5.08	0.87	5.14	0.88	5.20	0.89	5.35	0.91	5.52	0.93
						12	3.53	0.85	4.85	0.87	4.95	0.89	5.01	0.90	5.08	0.91	5.23	0.93	5.41	0.95
						14	3.53	0.87	4.72	0.89	4.83	0.91	4.89	0.92	4.96	0.93	5.12	0.95	5.31	0.97
						16	3.53	0.89	4.60	0.91	4.71	0.93	4.78	0.94	4.85	0.95	5.02	0.97	5.21	0.99
						18	3.53	0.92	4.48	0.94	4.60	0.96	4.67	0.97	4.75	0.98	4.92	0.99	5.12	1.01
						20	3.53	0.94	4.36	0.96	4.49	0.98	4.57	0.99	4.65	1.00	4.83	1.02	5.03	1.04
						21	3.53	0.95	4.31	0.97	4.44	0.99	4.52	1.00	4.60	1.01	4.78	1.03	4.99	1.05
						23	3.53	0.98	4.20	1.00	4.34	1.02	4.42	1.03	4.51	1.03	4.70	1.05	4.91	1.07
						25	3.53	1.00	4.10	1.02	4.25	1.04	4.33	1.05	4.42	1.06	4.62	1.08	4.84	1.10
						27	3.53	1.03	4.01	1.05	4.16	1.07	4.25	1.08	4.34	1.08	4.55	1.10	4.78	1.12
						29	3.53	1.05	3.92	1.07	4.08	1.09	4.17	1.10	4.27	1.11	4.48	1.13	4.72	1.15
						31	3.53	1.08	3.84	1.10	4.01	1.12	4.10	1.13	4.20	1.14	4.42	1.16	4.66	1.17
						33	3.53	1.11	3.76	1.13	3.94	1.15	4.03	1.16	4.13	1.16	4.36	1.18	4.61	1.20
						35	3.53	1.13	3.69	1.15	3.87	1.17	4.00	1.18	4.08	1.19	4.31	1.21	4.57	1.23
						37	3.53	1.16	3.62	1.18	3.81	1.20	3.91	1.21	4.02	1.22	4.26	1.24	4.53	1.26
						39	3.53	1.19	3.56	1.21	3.76	1.23	3.86	1.24	3.98	1.25	4.22	1.27	4.49	1.28
						42	3.53	1.24	3.48	1.26	3.69	1.28	3.80	1.29	3.92	1.29	4.17	1.31	4.46	1.33
						44	3.53	1.27	3.44	1.29	3.65	1.31	3.76	1.32	3.89	1.32	4.15	1.34	4.44	1.36
						46	3.53	1.30	3.39	1.32	3.61	1.34	3.73	1.35	3.86	1.36	4.13	1.37	4.42	1.39
2500	3500			6000	150%	10	3.53	0.72	4.99	0.73	5.08	0.75	5.14	0.76	5.20	0.77	5.35	0.79	5.52	0.80
						12	3.53	0.73	4.85	0.75	4.95	0.77	5.01	0.78	5.08	0.79	5.23	0.80	5.41	0.82
						14	3.53	0.75	4.72	0.77	4.83	0.79	4.89	0.80	4.96	0.81	5.12	0.82	5.31	0.84
						16	3.53	0.77	4.60	0.79	4.71	0.81	4.78	0.82	4.85	0.82	5.02	0.84	5.21	0.86
						18	3.53	0.79	4.48	0.81	4.60	0.83	4.67	0.84	4.75	0.84	4.92	0.86	5.12	0.87
						20	3.53	0.81	4.36	0.83	4.49	0.85	4.57	0.86	4.65	0.86	4.83	0.88	5.03	0.89
						21	3.53	0.82	4.31	0.84	4.44	0.86	4.52	0.87	4.60	0.87	4.78	0.89	4.99	0.90
						23	3.53	0.84	4.20	0.86	4.34	0.88	4.42	0.89	4.51	0.89	4.70	0.91	4.91	0.93
						25	3.53	0.86	4.10	0.88	4.25	0.90	4.33	0.91	4.42	0.92	4.62	0.93	4.84	0.95
						27	3.53	0.89	4.01	0.90	4.16	0.92	4.25	0.93	4.34	0.94	4.55	0.95	4.78	0.97
						29	3.53	0.91	3.92	0.93	4.08	0.94	4.17	0.95	4.27	0.96	4.48	0.98	4.72	0.99
						31	3.53	0.93	3.84	0.95	4.01	0.97	4.10	0.97	4.20	0.98	4.42	1.00	4.66	1.01
						33	3.53	0.96	3.76	0.97	3.94	0.99	4.03	1.00	4.13	1.01	4.36	1.02	4.61	1.04
						35	3.53	0.98	3.69	1.00	3.87	1.01	4.00	1.02	4.08	1.03	4.31	1.05	4.57	1.06
						37	3.53	1.01	3.62	1.02	3.81	1.04	3.91	1.05	4.02	1.05	4.26	1.07	4.53	1.09
						39	3.53	1.03	3.56	1.05	3.76	1.06	3.86	1.07	3.98	1.08	4.22	1.10	4.49	1.11
						42	3.53	1.07	3.48	1.09	3.69	1.10	3.80	1.11	3.92	1.12	4.17	1.13	4.46	1.15
						44	3.53	1.10	3.44	1.11	3.65	1.13	3.76	1.14	3.89	1.15	4.15	1.16	4.44	1.17
						46	3.53	1.12	3.39	1.14	3.61	1.16	3.73	1.16	3.86	1.17	4.13	1.19	4.42	1.20

NOTE

1. Cooling capacity is based on 27°CDB / 19°CWB (indoor temperature), 35°CDB (outdoor temperature).
2. Heating capacity is based on 20°CDB (indoor temperature), 7°CDB/6°CWB (outdoor temperature).
3. The above is the value for connecting with the following indoor units.
   - AJ***TNAPKH : Premium Wind Free
4. Capacities are based on the following conditions:
   - Corresponding refrigerant piping length: 5m / - Level difference : 0m
5. The total ability of connected a indoor unit is up to 6.0kW
6. It is impossible to connect the indoor unit for one room only.
7. This data is reference data for temperature capacity trend.

12. Capacity Table

12-1. AJ040TXJ2KH/EA

HEATING

Combination (Capacity Index)				Combination (Total)	Combination (%)	Outdoor Temperature (°C,DB)	Indoor Temperature (°C, DB)													
							14		16		18		20		21		22		24	
							TC(kW)	PI(kW)	TC(kW)	PI(kW)	TC(kW)	PI(kW)	TC(kW)	PI(kW)	TC(kW)	PI(kW)	TC(kW)	PI(kW)	TC(kW)	PI(kW)
2000				2000	50%	-15	1.26	0.70	1.22	0.71	1.18	0.72	1.17	0.72	1.15	0.73	1.13	0.73	1.11	0.74
						-10	1.51	0.74	1.47	0.75	1.43	0.76	1.41	0.76	1.40	0.77	1.37	0.77	1.34	0.78
						-5	1.76	0.77	1.71	0.78	1.67	0.79	1.66	0.80	1.64	0.80	1.61	0.81	1.58	0.82
						0	2.01	0.81	1.96	0.82	1.92	0.83	1.90	0.84	1.88	0.84	1.85	0.85	1.82	0.86
						2	2.11	0.82	2.06	0.84	2.02	0.85	2.00	0.85	1.98	0.86	1.95	0.87	1.92	0.87
						7	2.31	0.85	2.26	0.86	2.21	0.88	2.20	0.88	2.17	0.89	2.14	0.90	2.11	0.90
						10	2.51	0.88	2.46	0.89	2.41	0.91	2.39	0.91	2.37	0.92	2.33	0.93	2.30	0.93
						15	2.76	0.92	2.71	0.93	2.66	0.94	2.64	0.95	2.61	0.95	2.57	0.96	2.54	0.97
2500				2500	63%	-15	1.83	0.83	1.77	0.85	1.72	0.86	1.70	0.86	1.68	0.87	1.64	0.88	1.61	0.88
						-10	2.19	0.88	2.13	0.89	2.08	0.90	2.05	0.91	2.03	0.91	1.99	0.92	1.95	0.93
						-5	2.56	0.92	2.49	0.94	2.44	0.95	2.41	0.95	2.38	0.96	2.34	0.97	2.30	0.98
						0	2.92	0.96	2.85	0.98	2.79	0.99	2.76	1.00	2.74	1.00	2.69	1.01	2.65	1.02
						2	3.07	0.98	3.00	1.00	2.94	1.01	2.91	1.02	2.88	1.02	2.83	1.03	2.79	1.04
						7	3.36	1.02	3.29	1.03	3.22	1.05	3.20	1.05	3.16	1.06	3.11	1.07	3.07	1.08
						10	3.65	1.05	3.58	1.07	3.51	1.08	3.48	1.09	3.45	1.09	3.39	1.10	3.34	1.12
						15	4.02	1.09	3.94	1.11	3.87	1.12	3.83	1.13	3.80	1.14	3.74	1.15	3.69	1.16
3500				3500	88%	-15	2.29	1.03	2.22	1.05	2.15	1.06	2.13	1.07	2.10	1.07	2.05	1.08	2.01	1.09
						-10	2.74	1.09	2.67	1.10	2.60	1.12	2.57	1.12	2.54	1.13	2.49	1.14	2.44	1.15
						-5	3.20	1.14	3.12	1.16	3.04	1.17	3.01	1.18	2.98	1.19	2.92	1.20	2.88	1.21
						0	3.65	1.19	3.57	1.21	3.49	1.23	3.46	1.24	3.42	1.24	3.36	1.26	3.31	1.27
						2	3.83	1.22	3.75	1.23	3.67	1.25	3.63	1.26	3.60	1.27	3.54	1.28	3.48	1.29
						7	4.20	1.26	4.11	1.28	4.03	1.29	4.00	1.30	3.95	1.31	3.89	1.32	3.83	1.34
						10	4.56	1.30	4.47	1.32	4.38	1.34	4.35	1.35	4.31	1.35	4.24	1.37	4.18	1.38
						15	5.02	1.35	4.92	1.37	4.83	1.39	4.79	1.40	4.75	1.41	4.68	1.42	4.62	1.44
2000	2000			4000	100%	-15	2.52	0.92	2.44	0.94	2.37	0.95	2.34	0.95	2.31	0.96	2.26	0.97	2.21	0.98
						-10	3.02	0.97	2.93	0.98	2.86	1.00	2.82	1.00	2.79	1.01	2.74	1.02	2.69	1.03
						-5	3.52	1.02	3.43	1.03	3.35	1.05	3.31	1.05	3.28	1.06	3.22	1.07	3.16	1.08
						0	4.02	1.07	3.92	1.08	3.84	1.10	3.80	1.10	3.76	1.11	3.70	1.12	3.64	1.13
						2	4.22	1.08	4.12	1.10	4.04	1.12	4.00	1.12	3.96	1.13	3.89	1.14	3.83	1.15
						7	4.62	1.12	4.52	1.14	4.43	1.15	4.40	1.16	4.35	1.17	4.28	1.18	4.21	1.19
						10	5.02	1.16	4.92	1.18	4.82	1.19	4.78	1.20	4.74	1.21	4.66	1.22	4.60	1.23
						15	5.52	1.21	5.41	1.22	5.32	1.24	5.27	1.25	5.23	1.26	5.15	1.27	5.08	1.28
2000	2500			4500	113%	-15	2.52	0.92	2.44	0.94	2.37	0.95	2.34	0.95	2.31	0.96	2.26	0.97	2.21	0.98
						-10	3.02	0.97	2.93	0.98	2.86	1.00	2.82	1.00	2.79	1.01	2.74	1.02	2.69	1.03
						-5	3.52	1.02	3.43	1.03	3.35	1.05	3.31	1.05	3.28	1.06	3.22	1.07	3.16	1.08
						0	4.02	1.07	3.92	1.08	3.84	1.10	3.80	1.10	3.76	1.11	3.70	1.12	3.64	1.13
						2	4.22	1.08	4.12	1.10	4.04	1.12	4.00	1.12	3.96	1.13	3.89	1.14	3.83	1.15
						7	4.62	1.12	4.52	1.14	4.43	1.15	4.40	1.16	4.35	1.17	4.28	1.18	4.21	1.19
						10	5.02	1.16	4.92	1.18	4.82	1.19	4.78	1.20	4.74	1.21	4.66	1.22	4.60	1.23
						15	5.52	1.21	5.41	1.22	5.32	1.24	5.27	1.25	5.23	1.26	5.15	1.27	5.08	1.28
2000	3500			5500	138%	-15	2.52	0.92	2.44	0.94	2.37	0.95	2.34	0.95	2.31	0.96	2.26	0.97	2.21	0.98
						-10	3.02	0.97	2.93	0.98	2.86	1.00	2.82	1.00	2.79	1.01	2.74	1.02	2.69	1.03
						-5	3.52	1.02	3.43	1.03	3.35	1.05	3.31	1.05	3.28	1.06	3.22	1.07	3.16	1.08
						0	4.02	1.07	3.92	1.08	3.84	1.10	3.80	1.10	3.76	1.11	3.70	1.12	3.64	1.13
						2	4.22	1.08	4.12	1.10	4.04	1.12	4.00	1.12	3.96	1.13	3.89	1.14	3.83	1.15
						7	4.62	1.12	4.52	1.14	4.43	1.15	4.40	1.16	4.35	1.17	4.28	1.18	4.21	1.19
						10	5.02	1.16	4.92	1.18	4.82	1.19	4.78	1.20	4.74	1.21	4.66	1.22	4.60	1.23
						15	5.52	1.21	5.41	1.22	5.32	1.24	5.27	1.25	5.23	1.26	5.15	1.27	5.08	1.28

12. Capacity Table

12-1. AJ040TXJ2KH/EA

HEATING

Combination (Capacity Index)				Combination (Total)	Combination (%)	Outdoor Temperature (°C,DB)	Indoor Temperature (°C, DB)													
							14		16		18		20		21		22		24	
							TC(kW)	PI(kW)	TC(kW)	PI(kW)	TC(kW)	PI(kW)	TC(kW)	PI(kW)	TC(kW)	PI(kW)	TC(kW)	PI(kW)	TC(kW)	PI(kW)
2500	2500			5000	125%	-15	2.52	0.92	2.44	0.94	2.37	0.95	2.34	0.95	2.31	0.96	2.26	0.97	2.21	0.98
						-10	3.02	0.97	2.93	0.98	2.86	1.00	2.82	1.00	2.79	1.01	2.74	1.02	2.69	1.03
						-5	3.52	1.02	3.43	1.03	3.35	1.05	3.31	1.05	3.28	1.06	3.22	1.07	3.16	1.08
						0	4.02	1.07	3.92	1.08	3.84	1.10	3.80	1.10	3.76	1.11	3.70	1.12	3.64	1.13
						2	4.22	1.08	4.12	1.10	4.04	1.12	4.00	1.12	3.96	1.13	3.89	1.14	3.83	1.15
						7	4.62	1.12	4.52	1.14	4.43	1.15	4.40	1.16	4.35	1.17	4.28	1.18	4.21	1.19
						10	5.02	1.16	4.92	1.18	4.82	1.19	4.78	1.20	4.74	1.21	4.66	1.22	4.60	1.23
						15	5.52	1.21	5.41	1.22	5.32	1.24	5.27	1.25	5.23	1.26	5.15	1.27	5.08	1.28
2500	3500			6000	150%	-15	2.52	0.79	2.44	0.80	2.37	0.81	2.34	0.81	2.31	0.82	2.26	0.83	2.21	0.83
						-10	3.02	0.83	2.93	0.84	2.86	0.85	2.82	0.86	2.79	0.86	2.74	0.87	2.69	0.88
						-5	3.52	0.87	3.43	0.88	3.35	0.89	3.31	0.90	3.28	0.90	3.22	0.91	3.16	0.92
						0	4.02	0.91	3.92	0.92	3.84	0.94	3.80	0.94	3.76	0.95	3.70	0.96	3.64	0.97
						2	4.22	0.93	4.12	0.94	4.04	0.95	4.00	0.96	3.96	0.96	3.89	0.97	3.83	0.98
						7	4.62	0.96	4.52	0.97	4.43	0.99	4.40	0.99	4.35	1.00	4.28	1.01	4.21	1.02
						10	5.02	0.99	4.92	1.00	4.82	1.02	4.78	1.02	4.74	1.03	4.66	1.04	4.60	1.05
						15	5.52	1.03	5.41	1.05	5.32	1.06	5.27	1.07	5.23	1.07	5.15	1.08	5.08	1.09

NOTE

1. Cooling capacity is based on 27°CDB / 19°CWB (indoor temperature), 35°CDB (outdoor temperature).
2. Heating capacity is based on 20°CDB (indoor temperature), 7°CDB/6°CWB (outdoor temperature).
3. The above is the value for connecting with the following indoor units.
   - AJ***TNAPKH : Premium Wind Free
4. Capacities are based on the following conditions:
   - Corresponding refrigerant piping length : 5m / - Level difference : 0m
5. The total ability of connected a indoor unit is up to 6.0kW
6. It is impossible to connect the indoor unit for one room only.
7. This data is reference data for temperature capacity trend.

12. Capacity Table

12-2. AJ050TXJ2KH/EA

COOLING

Combination (Capacity Index)				Combination (Total)	Combination (%)	Outdoor Temperature (°C,DB)	Indoor Temperature (°C, WB)													
							14		16		18		19		20		22		24	
							TC(kW)	PI(kW)	TC(kW)	PI(kW)	TC(kW)	PI(kW)	TC(kW)	PI(kW)	TC(kW)	PI(kW)	TC(kW)	PI(kW)	TC(kW)	PI(kW)
2000				2000	38%	10	1.60	0.42	2.32	0.47	2.42	0.51	2.46	0.53	2.51	0.54	2.61	0.57	2.71	0.59
						12	1.60	0.44	2.28	0.49	2.38	0.53	2.43	0.54	2.48	0.56	2.57	0.58	2.67	0.60
						14	1.60	0.46	2.24	0.51	2.34	0.54	2.39	0.56	2.44	0.57	2.53	0.60	2.63	0.61
						16	1.60	0.48	2.21	0.52	2.30	0.56	2.35	0.57	2.40	0.59	2.50	0.61	2.59	0.63
						18	1.60	0.50	2.17	0.54	2.27	0.58	2.31	0.59	2.36	0.60	2.46	0.62	2.55	0.64
						20	1.60	0.52	2.13	0.56	2.23	0.59	2.28	0.61	2.32	0.62	2.42	0.64	2.52	0.65
						21	1.60	0.53	2.12	0.57	2.21	0.60	2.26	0.62	2.30	0.63	2.40	0.65	2.50	0.66
						23	1.60	0.55	2.08	0.59	2.17	0.62	2.22	0.63	2.27	0.64	2.36	0.66	2.46	0.67
						25	1.60	0.57	2.04	0.61	2.14	0.64	2.18	0.65	2.23	0.66	2.32	0.67	2.42	0.68
						27	1.60	0.59	2.01	0.63	2.10	0.66	2.15	0.67	2.19	0.68	2.29	0.69	2.38	0.70
						29	1.60	0.62	1.97	0.65	2.06	0.67	2.11	0.68	2.16	0.69	2.25	0.71	2.34	0.71
						31	1.60	0.64	1.94	0.67	2.03	0.69	2.07	0.70	2.12	0.71	2.21	0.72	2.30	0.72
						33	1.60	0.66	1.90	0.69	1.99	0.71	2.04	0.72	2.08	0.73	2.17	0.74	2.27	0.74
						35	1.60	0.68	1.86	0.71	1.95	0.73	2.00	0.73	2.04	0.75	2.14	0.75	2.23	0.75
						37	1.60	0.71	1.83	0.73	1.92	0.75	1.96	0.76	2.01	0.76	2.10	0.77	2.19	0.77
						39	1.60	0.73	1.79	0.75	1.88	0.77	1.93	0.78	1.97	0.78	2.06	0.79	2.15	0.78
						42	1.58	0.76	1.74	0.79	1.83	0.80	1.87	0.81	1.92	0.81	2.01	0.81	2.10	0.81
						44	1.50	0.79	1.71	0.81	1.79	0.82	1.84	0.83	1.88	0.83	1.97	0.83	2.06	0.82
						46	1.46	0.81	1.67	0.83	1.76	0.84	1.80	0.85	1.84	0.85	1.93	0.85	2.02	0.84
2500				2500	48%	10	2.00	0.46	2.90	0.52	3.02	0.56	3.08	0.58	3.14	0.60	3.26	0.63	3.39	0.65
						12	2.00	0.48	2.85	0.53	2.97	0.58	3.03	0.60	3.09	0.61	3.22	0.64	3.34	0.66
						14	2.00	0.51	2.80	0.55	2.93	0.60	2.99	0.61	3.05	0.63	3.17	0.65	3.29	0.67
						16	2.00	0.53	2.76	0.57	2.88	0.61	2.94	0.63	3.00	0.65	3.12	0.67	3.24	0.69
						18	2.00	0.55	2.71	0.59	2.83	0.63	2.89	0.65	2.95	0.66	3.07	0.68	3.19	0.70
						20	2.00	0.57	2.67	0.61	2.79	0.65	2.85	0.67	2.90	0.68	3.02	0.70	3.14	0.71
						21	2.00	0.58	2.64	0.62	2.76	0.66	2.82	0.67	2.88	0.69	3.00	0.71	3.12	0.72
						23	2.00	0.61	2.60	0.65	2.72	0.68	2.78	0.69	2.83	0.71	2.95	0.72	3.07	0.73
						25	2.00	0.63	2.55	0.67	2.67	0.70	2.73	0.71	2.79	0.72	2.91	0.74	3.02	0.75
						27	2.00	0.65	2.51	0.69	2.62	0.72	2.68	0.73	2.74	0.74	2.86	0.76	2.98	0.76
						29	2.00	0.68	2.46	0.71	2.58	0.74	2.64	0.75	2.69	0.76	2.81	0.77	2.93	0.78
						31	2.00	0.70	2.42	0.73	2.53	0.76	2.59	0.77	2.65	0.78	2.76	0.79	2.88	0.79
						33	2.00	0.72	2.37	0.76	2.49	0.78	2.54	0.79	2.60	0.80	2.72	0.81	2.83	0.81
						35	2.00	0.75	2.33	0.78	2.44	0.80	2.50	0.80	2.56	0.82	2.67	0.83	2.78	0.83
						37	2.00	0.77	2.29	0.80	2.40	0.82	2.45	0.83	2.51	0.84	2.62	0.84	2.74	0.84
						39	2.00	0.80	2.24	0.83	2.35	0.85	2.41	0.85	2.46	0.86	2.58	0.86	2.69	0.86
						42	1.98	0.84	2.18	0.86	2.29	0.88	2.34	0.88	2.40	0.89	2.51	0.89	2.62	0.88
						44	1.88	0.86	2.13	0.89	2.24	0.90	2.30	0.91	2.35	0.91	2.46	0.91	2.57	0.90
						46	1.83	0.89	2.09	0.91	2.20	0.93	2.25	0.93	2.30	0.93	2.41	0.93	2.53	0.92

12. Capacity Table

12-2. AJ050TXJ2KH/EA

COOLING

Combination (Capacity Index)				Combination (Total)	Combination (%)	Outdoor Temperature (°C,DB)	Indoor Temperature (°C, WB)													
							14		16		18		19		20		22		24	
							TC(kW)	PI(kW)	TC(kW)	PI(kW)	TC(kW)	PI(kW)	TC(kW)	PI(kW)	TC(kW)	PI(kW)	TC(kW)	PI(kW)	TC(kW)	PI(kW)
3500				3500	67%	10	2.80	0.63	4.06	0.70	4.23	0.76	4.31	0.79	4.40	0.81	4.57	0.85	4.74	0.88
						12	2.80	0.66	3.99	0.73	4.16	0.79	4.25	0.81	4.33	0.83	4.50	0.87	4.68	0.90
						14	2.80	0.69	3.93	0.75	4.10	0.81	4.18	0.83	4.26	0.86	4.44	0.89	4.61	0.92
						16	2.80	0.72	3.86	0.78	4.03	0.84	4.11	0.86	4.20	0.88	4.37	0.91	4.54	0.93
						18	2.80	0.75	3.80	0.81	3.96	0.86	4.05	0.88	4.13	0.90	4.30	0.93	4.47	0.95
						20	2.80	0.78	3.73	0.84	3.90	0.89	3.98	0.91	4.07	0.92	4.23	0.95	4.40	0.97
						21	2.80	0.79	3.70	0.85	3.87	0.90	3.95	0.92	4.03	0.94	4.20	0.96	4.37	0.98
						23	2.80	0.82	3.64	0.88	3.80	0.93	3.89	0.94	3.97	0.96	4.13	0.99	4.30	1.00
						25	2.80	0.86	3.58	0.91	3.74	0.95	3.82	0.97	3.90	0.99	4.07	1.01	4.23	1.02
						27	2.80	0.89	3.51	0.94	3.67	0.98	3.76	1.00	3.84	1.01	4.00	1.03	4.17	1.04
						29	2.80	0.92	3.45	0.97	3.61	1.01	3.69	1.02	3.77	1.04	3.93	1.05	4.10	1.06
						31	2.80	0.95	3.39	1.00	3.55	1.04	3.63	1.05	3.71	1.06	3.87	1.08	4.03	1.08
						33	2.80	0.99	3.32	1.03	3.48	1.06	3.56	1.08	3.64	1.09	3.80	1.10	3.97	1.10
						35	2.80	1.02	3.26	1.06	3.42	1.09	3.50	1.09	3.58	1.11	3.74	1.12	3.90	1.12
						37	2.80	1.05	3.20	1.09	3.36	1.12	3.43	1.13	3.51	1.14	3.67	1.15	3.83	1.15
						39	2.80	1.09	3.14	1.13	3.29	1.15	3.37	1.16	3.45	1.17	3.61	1.17	3.77	1.17
						42	2.77	1.14	3.05	1.17	3.20	1.20	3.28	1.21	3.35	1.21	3.51	1.21	3.67	1.21
						44	2.63	1.18	2.98	1.21	3.14	1.23	3.21	1.24	3.29	1.24	3.45	1.24	3.60	1.23
						46	2.56	1.21	2.92	1.24	3.07	1.26	3.15	1.27	3.23	1.27	3.38	1.27	3.54	1.25
5000				5000	96%	10	4.00	0.93	5.79	1.03	6.04	1.12	6.16	1.16	6.28	1.19	6.53	1.25	6.78	1.30
						12	4.00	0.97	5.70	1.07	5.94	1.15	6.07	1.19	6.19	1.23	6.43	1.28	6.68	1.32
						14	4.00	1.01	5.61	1.11	5.85	1.19	5.97	1.23	6.09	1.26	6.34	1.31	6.58	1.35
						16	4.00	1.05	5.52	1.15	5.76	1.23	5.88	1.26	6.00	1.29	6.24	1.34	6.48	1.37
						18	4.00	1.10	5.43	1.19	5.66	1.26	5.78	1.30	5.90	1.32	6.14	1.37	6.39	1.40
						20	4.00	1.14	5.34	1.23	5.57	1.30	5.69	1.33	5.81	1.36	6.05	1.40	6.29	1.43
						21	4.00	1.16	5.29	1.25	5.53	1.32	5.64	1.35	5.76	1.38	6.00	1.41	6.24	1.44
						23	4.00	1.21	5.20	1.29	5.43	1.36	5.55	1.39	5.67	1.41	5.91	1.45	6.14	1.47
						25	4.00	1.26	5.11	1.33	5.34	1.40	5.46	1.42	5.57	1.45	5.81	1.48	6.05	1.50
						27	4.00	1.30	5.02	1.38	5.25	1.44	5.37	1.46	5.48	1.48	5.72	1.51	5.95	1.53
						29	4.00	1.35	4.93	1.42	5.16	1.48	5.27	1.50	5.39	1.52	5.62	1.55	5.86	1.56
						31	4.00	1.40	4.84	1.47	5.07	1.52	5.18	1.54	5.30	1.56	5.53	1.58	5.76	1.59
						33	4.00	1.45	4.75	1.51	4.98	1.56	5.09	1.58	5.20	1.60	5.43	1.61	5.66	1.62
						35	4.00	1.50	4.66	1.56	4.89	1.60	5.00	1.60	5.11	1.64	5.34	1.65	5.57	1.65
						37	4.00	1.55	4.57	1.61	4.79	1.65	4.91	1.66	5.02	1.67	5.25	1.69	5.47	1.68
						39	4.00	1.60	4.48	1.65	4.70	1.69	4.82	1.71	4.93	1.72	5.15	1.72	5.38	1.72
						42	3.95	1.68	4.35	1.72	4.57	1.76	4.68	1.77	4.79	1.78	5.01	1.78	5.24	1.77
						44	3.75	1.73	4.26	1.77	4.48	1.80	4.59	1.81	4.70	1.82	4.92	1.82	5.14	1.80
						46	3.65	1.78	4.18	1.82	4.39	1.85	4.50	1.86	4.61	1.86	4.83	1.86	5.05	1.84

12. Capacity Table

12-2. AJ050TXJ2KH/EA

COOLING

Combination (Capacity Index)				Combination (Total)	Combination (%)	Outdoor Temperature (°C,DB)	Indoor Temperature (°C, WB)													
							14		16		18		19		20		22		24	
							TC(kW)	PI(kW)	TC(kW)	PI(kW)	TC(kW)	PI(kW)	TC(kW)	PI(kW)	TC(kW)	PI(kW)	TC(kW)	PI(kW)	TC(kW)	PI(kW)
2000	2000			4000	77%	10	3.53	0.87	4.99	0.90	5.08	0.92	5.14	0.93	5.20	0.94	5.35	0.96	5.52	0.98
						12	3.53	0.90	4.85	0.92	4.95	0.94	5.01	0.95	5.08	0.96	5.23	0.98	5.41	1.00
						14	3.53	0.92	4.72	0.94	4.83	0.96	4.89	0.97	4.96	0.98	5.12	1.00	5.31	1.02
						16	3.53	0.94	4.60	0.96	4.71	0.99	4.78	1.00	4.85	1.01	5.02	1.03	5.21	1.04
						18	3.53	0.97	4.48	0.99	4.60	1.01	4.67	1.02	4.75	1.03	4.92	1.05	5.12	1.07
						20	3.53	0.99	4.36	1.01	4.49	1.03	4.57	1.04	4.65	1.05	4.83	1.07	5.03	1.09
						21	3.53	1.00	4.31	1.03	4.44	1.05	4.52	1.06	4.60	1.07	4.78	1.09	4.99	1.10
						23	3.53	1.03	4.20	1.05	4.34	1.07	4.42	1.08	4.51	1.09	4.70	1.11	4.91	1.13
						25	3.53	1.06	4.10	1.08	4.25	1.10	4.33	1.11	4.42	1.12	4.62	1.14	4.84	1.16
						27	3.53	1.08	4.01	1.10	4.16	1.12	4.25	1.13	4.34	1.14	4.55	1.16	4.78	1.18
						29	3.53	1.11	3.92	1.13	4.08	1.15	4.17	1.16	4.27	1.17	4.48	1.19	4.72	1.21
						31	3.53	1.14	3.84	1.16	4.01	1.18	4.10	1.19	4.20	1.20	4.42	1.22	4.66	1.24
						33	3.53	1.17	3.76	1.19	3.94	1.21	4.03	1.22	4.13	1.23	4.36	1.25	4.61	1.27
						35	3.53	1.20	3.69	1.22	3.87	1.24	4.00	1.25	4.08	1.26	4.31	1.28	4.57	1.29
						37	3.53	1.23	3.62	1.25	3.81	1.27	3.91	1.28	4.02	1.29	4.26	1.31	4.53	1.32
						39	3.53	1.26	3.56	1.28	3.76	1.30	3.86	1.31	3.98	1.32	4.22	1.34	4.49	1.35
						42	3.53	1.31	3.48	1.33	3.69	1.35	3.80	1.36	3.92	1.37	4.17	1.38	4.46	1.40
						44	3.53	1.34	3.44	1.36	3.65	1.38	3.76	1.39	3.89	1.40	4.15	1.42	4.44	1.43
						46	3.53	1.37	3.39	1.39	3.61	1.41	3.73	1.42	3.86	1.43	4.13	1.45	4.42	1.47
2000	2500			4500	87%	10	4.07	1.00	5.73	1.03	5.84	1.05	5.91	1.07	5.98	1.08	6.15	1.10	6.34	1.12
						12	4.07	1.03	5.58	1.06	5.69	1.08	5.76	1.09	5.84	1.10	6.02	1.13	6.22	1.15
						14	4.07	1.06	5.43	1.08	5.55	1.11	5.63	1.12	5.71	1.13	5.89	1.15	6.10	1.17
						16	4.07	1.08	5.29	1.11	5.42	1.13	5.50	1.14	5.58	1.16	5.77	1.18	5.99	1.20
						18	4.07	1.11	5.15	1.14	5.29	1.16	5.37	1.17	5.46	1.18	5.66	1.21	5.89	1.23
						20	4.07	1.14	5.02	1.16	5.17	1.19	5.25	1.20	5.34	1.21	5.55	1.23	5.79	1.25
						21	4.07	1.15	4.96	1.18	5.11	1.20	5.19	1.21	5.29	1.22	5.50	1.25	5.74	1.27
						23	4.07	1.18	4.83	1.21	4.99	1.23	5.09	1.24	5.18	1.25	5.40	1.28	5.65	1.30
						25	4.07	1.21	4.72	1.24	4.89	1.26	4.98	1.27	5.09	1.28	5.31	1.31	5.57	1.33
						27	4.07	1.24	4.61	1.27	4.79	1.29	4.89	1.30	4.99	1.31	5.23	1.34	5.49	1.36
						29	4.07	1.27	4.51	1.30	4.69	1.32	4.80	1.33	4.91	1.35	5.15	1.37	5.42	1.39
						31	4.07	1.31	4.42	1.33	4.61	1.36	4.71	1.37	4.83	1.38	5.08	1.40	5.36	1.42
						33	4.07	1.34	4.33	1.36	4.53	1.39	4.64	1.40	4.76	1.41	5.01	1.43	5.30	1.45
						35	4.07	1.37	4.24	1.40	4.45	1.42	4.60	1.43	4.69	1.44	4.96	1.47	5.25	1.49
						37	4.07	1.41	4.17	1.43	4.38	1.46	4.50	1.47	4.63	1.48	4.90	1.50	5.21	1.52
						39	4.07	1.44	4.10	1.47	4.32	1.49	4.44	1.50	4.57	1.51	4.86	1.54	5.17	1.56
						42	4.07	1.50	4.01	1.52	4.24	1.55	4.37	1.56	4.51	1.57	4.80	1.59	5.12	1.61
						44	4.07	1.54	3.95	1.56	4.20	1.58	4.33	1.59	4.47	1.61	4.77	1.63	5.10	1.65
						46	4.07	1.57	3.90	1.60	4.16	1.62	4.29	1.63	4.44	1.64	4.75	1.66	5.09	1.68

12. Capacity Table

12-2. AJ050TXJ2KH/EA

COOLING

Combination (Capacity Index)				Combination (Total)	Combination (%)	Outdoor Temperature (°C,DB)	Indoor Temperature (°C, WB)													
							14		16		18		19		20		22		24	
							TC(kW)	PI(kW)	TC(kW)	PI(kW)	TC(kW)	PI(kW)	TC(kW)	PI(kW)	TC(kW)	PI(kW)	TC(kW)	PI(kW)	TC(kW)	PI(kW)
2000	3500			5500	106%	10	4.42	1.05	6.23	1.07	6.35	1.10	6.42	1.11	6.50	1.12	6.68	1.15	6.90	1.17
						12	4.42	1.07	6.06	1.10	6.19	1.12	6.27	1.14	6.35	1.15	6.54	1.17	6.76	1.20
						14	4.42	1.10	5.90	1.13	6.04	1.15	6.12	1.16	6.20	1.18	6.40	1.20	6.63	1.22
						16	4.42	1.13	5.75	1.15	5.89	1.18	5.97	1.19	6.06	1.20	6.27	1.23	6.51	1.25
						18	4.42	1.16	5.60	1.18	5.75	1.21	5.84	1.22	5.93	1.23	6.15	1.26	6.40	1.28
						20	4.42	1.19	5.45	1.21	5.62	1.24	5.71	1.25	5.81	1.26	6.03	1.28	6.29	1.31
						21	4.42	1.20	5.39	1.23	5.55	1.25	5.65	1.26	5.75	1.28	5.98	1.30	6.24	1.32
						23	4.42	1.23	5.25	1.26	5.43	1.28	5.53	1.29	5.63	1.31	5.87	1.33	6.14	1.35
						25	4.42	1.26	5.13	1.29	5.31	1.31	5.42	1.33	5.53	1.34	5.77	1.36	6.05	1.38
						27	4.42	1.30	5.01	1.32	5.20	1.35	5.31	1.36	5.43	1.37	5.68	1.39	5.97	1.41
						29	4.42	1.33	4.90	1.35	5.10	1.38	5.21	1.39	5.33	1.40	5.60	1.43	5.89	1.45
						31	4.42	1.36	4.80	1.39	5.01	1.41	5.12	1.42	5.25	1.44	5.52	1.46	5.82	1.48
						33	4.42	1.40	4.70	1.42	4.92	1.45	5.04	1.46	5.17	1.47	5.45	1.49	5.76	1.51
						35	4.42	1.43	4.61	1.46	4.84	1.48	5.00	1.49	5.10	1.51	5.39	1.53	5.71	1.55
						37	4.42	1.47	4.53	1.49	4.76	1.52	4.89	1.53	5.03	1.54	5.33	1.56	5.66	1.59
						39	4.42	1.51	4.45	1.53	4.70	1.55	4.83	1.57	4.97	1.58	5.28	1.60	5.62	1.62
						42	4.42	1.56	4.35	1.59	4.61	1.61	4.75	1.62	4.90	1.63	5.22	1.66	5.57	1.68
						44	4.42	1.60	4.30	1.63	4.56	1.65	4.70	1.66	4.86	1.67	5.18	1.70	5.55	1.72
						46	4.42	1.64	4.24	1.67	4.52	1.69	4.67	1.70	4.82	1.71	5.16	1.73	5.53	1.76
2000	5000			7000	135%	10	4.42	1.02	6.23	1.04	6.35	1.07	6.42	1.08	6.50	1.09	6.68	1.12	6.90	1.14
						12	4.42	1.04	6.06	1.07	6.19	1.09	6.27	1.11	6.35	1.12	6.54	1.14	6.76	1.16
						14	4.42	1.07	5.90	1.10	6.04	1.12	6.12	1.13	6.20	1.14	6.40	1.17	6.63	1.19
						16	4.42	1.10	5.75	1.12	5.89	1.15	5.97	1.16	6.06	1.17	6.27	1.19	6.51	1.22
						18	4.42	1.13	5.60	1.15	5.75	1.18	5.84	1.19	5.93	1.20	6.15	1.22	6.40	1.24
						20	4.42	1.15	5.45	1.18	5.62	1.20	5.71	1.22	5.81	1.23	6.03	1.25	6.29	1.27
						21	4.42	1.17	5.39	1.19	5.55	1.22	5.65	1.23	5.75	1.24	5.98	1.26	6.24	1.29
						23	4.42	1.20	5.25	1.22	5.43	1.25	5.53	1.26	5.63	1.27	5.87	1.29	6.14	1.32
						25	4.42	1.23	5.13	1.25	5.31	1.28	5.42	1.29	5.53	1.30	5.77	1.32	6.05	1.35
						27	4.42	1.26	5.01	1.29	5.20	1.31	5.31	1.32	5.43	1.33	5.68	1.36	5.97	1.38
						29	4.42	1.29	4.90	1.32	5.10	1.34	5.21	1.35	5.33	1.36	5.60	1.39	5.89	1.41
						31	4.42	1.33	4.80	1.35	5.01	1.37	5.12	1.39	5.25	1.40	5.52	1.42	5.82	1.44
						33	4.42	1.36	4.70	1.38	4.92	1.41	5.04	1.42	5.17	1.43	5.45	1.45	5.76	1.47
						35	4.42	1.39	4.61	1.42	4.84	1.44	5.00	1.45	5.10	1.46	5.39	1.49	5.71	1.51
						37	4.42	1.43	4.53	1.45	4.76	1.48	4.89	1.49	5.03	1.50	5.33	1.52	5.66	1.54
						39	4.42	1.46	4.45	1.49	4.70	1.51	4.83	1.52	4.97	1.54	5.28	1.56	5.62	1.58
						42	4.42	1.52	4.35	1.54	4.61	1.57	4.75	1.58	4.90	1.59	5.22	1.61	5.57	1.63
						44	4.42	1.56	4.30	1.58	4.56	1.61	4.70	1.62	4.86	1.63	5.18	1.65	5.55	1.67
						46	4.42	1.60	4.24	1.62	4.52	1.64	4.67	1.66	4.82	1.67	5.16	1.69	5.53	1.71

12. Capacity Table

12-2. AJ050TXJ2KH/EA

COOLING

Combination (Capacity Index)				Combination (Total)	Combination (%)	Outdoor Temperature (°C,DB)	Indoor Temperature (°C, WB)													
							14		16		18		19		20		22		24	
							TC(kW)	PI(kW)	TC(kW)	PI(kW)	TC(kW)	PI(kW)	TC(kW)	PI(kW)	TC(kW)	PI(kW)	TC(kW)	PI(kW)	TC(kW)	PI(kW)
2500	2500			5000	96%	10	4.42	1.05	6.23	1.08	6.35	1.11	6.42	1.12	6.50	1.13	6.68	1.16	6.90	1.18
						12	4.42	1.08	6.06	1.11	6.19	1.13	6.27	1.14	6.35	1.16	6.54	1.18	6.76	1.20
						14	4.42	1.11	5.90	1.13	6.04	1.16	6.12	1.17	6.20	1.18	6.40	1.21	6.63	1.23
						16	4.42	1.14	5.75	1.16	5.89	1.19	5.97	1.20	6.06	1.21	6.27	1.24	6.51	1.26
						18	4.42	1.16	5.60	1.19	5.75	1.22	5.84	1.23	5.93	1.24	6.15	1.26	6.40	1.29
						20	4.42	1.19	5.45	1.22	5.62	1.25	5.71	1.26	5.81	1.27	6.03	1.29	6.29	1.32
						21	4.42	1.21	5.39	1.24	5.55	1.26	5.65	1.27	5.75	1.28	5.98	1.31	6.24	1.33
						23	4.42	1.24	5.25	1.27	5.43	1.29	5.53	1.30	5.63	1.32	5.87	1.34	6.14	1.36
						25	4.42	1.27	5.13	1.30	5.31	1.32	5.42	1.33	5.53	1.35	5.77	1.37	6.05	1.39
						27	4.42	1.30	5.01	1.33	5.20	1.35	5.31	1.37	5.43	1.38	5.68	1.40	5.97	1.42
						29	4.42	1.34	4.90	1.36	5.10	1.39	5.21	1.40	5.33	1.41	5.60	1.43	5.89	1.46
						31	4.42	1.37	4.80	1.40	5.01	1.42	5.12	1.43	5.25	1.45	5.52	1.47	5.82	1.49
						33	4.42	1.41	4.70	1.43	4.92	1.46	5.04	1.47	5.17	1.48	5.45	1.50	5.76	1.52
						35	4.42	1.44	4.61	1.47	4.84	1.49	5.00	1.50	5.10	1.52	5.39	1.54	5.71	1.56
						37	4.42	1.48	4.53	1.50	4.76	1.53	4.89	1.54	5.03	1.55	5.33	1.57	5.66	1.60
						39	4.42	1.52	4.45	1.54	4.70	1.56	4.83	1.58	4.97	1.59	5.28	1.61	5.62	1.63
						42	4.42	1.57	4.35	1.60	4.61	1.62	4.75	1.63	4.90	1.65	5.22	1.67	5.57	1.69
						44	4.42	1.61	4.30	1.64	4.56	1.66	4.70	1.67	4.86	1.68	5.18	1.71	5.55	1.73
						46	4.42	1.65	4.24	1.68	4.52	1.70	4.67	1.71	4.82	1.72	5.16	1.75	5.53	1.77
2500	3500			6000	115%	10	4.42	1.05	6.23	1.08	6.35	1.11	6.42	1.12	6.50	1.13	6.68	1.16	6.90	1.18
						12	4.42	1.08	6.06	1.11	6.19	1.13	6.27	1.14	6.35	1.16	6.54	1.18	6.76	1.20
						14	4.42	1.11	5.90	1.13	6.04	1.16	6.12	1.17	6.20	1.18	6.40	1.21	6.63	1.23
						16	4.42	1.14	5.75	1.16	5.89	1.19	5.97	1.20	6.06	1.21	6.27	1.24	6.51	1.26
						18	4.42	1.16	5.60	1.19	5.75	1.22	5.84	1.23	5.93	1.24	6.15	1.26	6.40	1.29
						20	4.42	1.19	5.45	1.22	5.62	1.25	5.71	1.26	5.81	1.27	6.03	1.29	6.29	1.32
						21	4.42	1.21	5.39	1.24	5.55	1.26	5.65	1.27	5.75	1.28	5.98	1.31	6.24	1.33
						23	4.42	1.24	5.25	1.27	5.43	1.29	5.53	1.30	5.63	1.32	5.87	1.34	6.14	1.36
						25	4.42	1.27	5.13	1.30	5.31	1.32	5.42	1.33	5.53	1.35	5.77	1.37	6.05	1.39
						27	4.42	1.30	5.01	1.33	5.20	1.35	5.31	1.37	5.43	1.38	5.68	1.40	5.97	1.42
						29	4.42	1.34	4.90	1.36	5.10	1.39	5.21	1.40	5.33	1.41	5.60	1.43	5.89	1.46
						31	4.42	1.37	4.80	1.40	5.01	1.42	5.12	1.43	5.25	1.45	5.52	1.47	5.82	1.49
						33	4.42	1.41	4.70	1.43	4.92	1.46	5.04	1.47	5.17	1.48	5.45	1.50	5.76	1.52
						35	4.42	1.44	4.61	1.47	4.84	1.49	5.00	1.50	5.10	1.52	5.39	1.54	5.71	1.56
						37	4.42	1.48	4.53	1.50	4.76	1.53	4.89	1.54	5.03	1.55	5.33	1.57	5.66	1.60
						39	4.42	1.52	4.45	1.54	4.70	1.56	4.83	1.58	4.97	1.59	5.28	1.61	5.62	1.63
						42	4.42	1.57	4.35	1.60	4.61	1.62	4.75	1.63	4.90	1.65	5.22	1.67	5.57	1.69
						44	4.42	1.61	4.30	1.64	4.56	1.66	4.70	1.67	4.86	1.68	5.18	1.71	5.55	1.73
						46	4.42	1.65	4.24	1.68	4.52	1.70	4.67	1.71	4.82	1.72	5.16	1.75	5.53	1.77

12. Capacity Table

12-2. AJ050TXJ2KH/EA

COOLING

Combination (Capacity Index)				Combination (Total)	Combination (%)	Outdoor Temperature (°C,DB)	Indoor Temperature (°C, WB)													
							14		16		18		19		20		22		24	
							TC(kW)	PI(kW)	TC(kW)	PI(kW)	TC(kW)	PI(kW)	TC(kW)	PI(kW)	TC(kW)	PI(kW)	TC(kW)	PI(kW)	TC(kW)	PI(kW)
2500	5000			7500	144%	10	4.42	1.02	6.23	1.04	6.35	1.07	6.42	1.08	6.50	1.09	6.68	1.12	6.90	1.14
						12	4.42	1.04	6.06	1.07	6.19	1.09	6.27	1.11	6.35	1.12	6.54	1.14	6.76	1.16
						14	4.42	1.07	5.90	1.10	6.04	1.12	6.12	1.13	6.20	1.14	6.40	1.17	6.63	1.19
						16	4.42	1.10	5.75	1.12	5.89	1.15	5.97	1.16	6.06	1.17	6.27	1.19	6.51	1.22
						18	4.42	1.13	5.60	1.15	5.75	1.18	5.84	1.19	5.93	1.20	6.15	1.22	6.40	1.24
						20	4.42	1.15	5.45	1.18	5.62	1.20	5.71	1.22	5.81	1.23	6.03	1.25	6.29	1.27
						21	4.42	1.17	5.39	1.19	5.55	1.22	5.65	1.23	5.75	1.24	5.98	1.26	6.24	1.29
						23	4.42	1.20	5.25	1.22	5.43	1.25	5.53	1.26	5.63	1.27	5.87	1.29	6.14	1.32
						25	4.42	1.23	5.13	1.25	5.31	1.28	5.42	1.29	5.53	1.30	5.77	1.32	6.05	1.35
						27	4.42	1.26	5.01	1.29	5.20	1.31	5.31	1.32	5.43	1.33	5.68	1.36	5.97	1.38
						29	4.42	1.29	4.90	1.32	5.10	1.34	5.21	1.35	5.33	1.36	5.60	1.39	5.89	1.41
						31	4.42	1.33	4.80	1.35	5.01	1.37	5.12	1.39	5.25	1.40	5.52	1.42	5.82	1.44
						33	4.42	1.36	4.70	1.38	4.92	1.41	5.04	1.42	5.17	1.43	5.45	1.45	5.76	1.47
						35	4.42	1.39	4.61	1.42	4.84	1.44	5.00	1.45	5.10	1.46	5.39	1.49	5.71	1.51
						37	4.42	1.43	4.53	1.45	4.76	1.48	4.89	1.49	5.03	1.50	5.33	1.52	5.66	1.54
						39	4.42	1.46	4.45	1.49	4.70	1.51	4.83	1.52	4.97	1.54	5.28	1.56	5.62	1.58
						42	4.42	1.52	4.35	1.54	4.61	1.57	4.75	1.58	4.90	1.59	5.22	1.61	5.57	1.63
						44	4.42	1.56	4.30	1.58	4.56	1.61	4.70	1.62	4.86	1.63	5.18	1.65	5.55	1.67
						46	4.42	1.60	4.24	1.62	4.52	1.64	4.67	1.66	4.82	1.67	5.16	1.69	5.53	1.71
3500	3500			7000	135%	10	4.42	1.05	6.23	1.08	6.35	1.11	6.42	1.12	6.50	1.13	6.68	1.16	6.90	1.18
						12	4.42	1.08	6.06	1.11	6.19	1.13	6.27	1.14	6.35	1.16	6.54	1.18	6.76	1.20
						14	4.42	1.11	5.90	1.13	6.04	1.16	6.12	1.17	6.20	1.18	6.40	1.21	6.63	1.23
						16	4.42	1.14	5.75	1.16	5.89	1.19	5.97	1.20	6.06	1.21	6.27	1.24	6.51	1.26
						18	4.42	1.16	5.60	1.19	5.75	1.22	5.84	1.23	5.93	1.24	6.15	1.26	6.40	1.29
						20	4.42	1.19	5.45	1.22	5.62	1.25	5.71	1.26	5.81	1.27	6.03	1.29	6.29	1.32
						21	4.42	1.21	5.39	1.24	5.55	1.26	5.65	1.27	5.75	1.28	5.98	1.31	6.24	1.33
						23	4.42	1.24	5.25	1.27	5.43	1.29	5.53	1.30	5.63	1.32	5.87	1.34	6.14	1.36
						25	4.42	1.27	5.13	1.30	5.31	1.32	5.42	1.33	5.53	1.35	5.77	1.37	6.05	1.39
						27	4.42	1.30	5.01	1.33	5.20	1.35	5.31	1.37	5.43	1.38	5.68	1.40	5.97	1.42
						29	4.42	1.34	4.90	1.36	5.10	1.39	5.21	1.40	5.33	1.41	5.60	1.43	5.89	1.46
						31	4.42	1.37	4.80	1.40	5.01	1.42	5.12	1.43	5.25	1.45	5.52	1.47	5.82	1.49
						33	4.42	1.41	4.70	1.43	4.92	1.46	5.04	1.47	5.17	1.48	5.45	1.50	5.76	1.52
						35	4.42	1.44	4.61	1.47	4.84	1.49	5.00	1.50	5.10	1.52	5.39	1.54	5.71	1.56
						37	4.42	1.48	4.53	1.50	4.76	1.53	4.89	1.54	5.03	1.55	5.33	1.57	5.66	1.60
						39	4.42	1.52	4.45	1.54	4.70	1.56	4.83	1.58	4.97	1.59	5.28	1.61	5.62	1.63
						42	4.42	1.57	4.35	1.60	4.61	1.62	4.75	1.63	4.90	1.65	5.22	1.67	5.57	1.69
						44	4.42	1.61	4.30	1.64	4.56	1.66	4.70	1.67	4.86	1.68	5.18	1.71	5.55	1.73
						46	4.42	1.65	4.24	1.68	4.52	1.70	4.67	1.71	4.82	1.72	5.16	1.75	5.53	1.77

12. Capacity Table

12-2. AJ050TXJ2KH/EA

COOLING

Combination (Capacity Index)				Combination (Total)	Combination (%)	Outdoor Temperature (°C,DB)	Indoor Temperature (°C, WB)													
							14		16		18		19		20		22		24	
							TC(kW)	PI(kW)	TC(kW)	PI(kW)	TC(kW)	PI(kW)	TC(kW)	PI(kW)	TC(kW)	PI(kW)	TC(kW)	PI(kW)	TC(kW)	PI(kW)
3500	5000			8500	144%	10	4.42	0.93	6.23	0.95	6.35	0.97	6.42	0.98	6.50	1.00	6.68	1.02	6.90	1.04
						12	4.42	0.95	6.06	0.97	6.19	1.00	6.27	1.01	6.35	1.02	6.54	1.04	6.76	1.06
						14	4.42	0.97	5.90	1.00	6.04	1.02	6.12	1.03	6.20	1.04	6.40	1.06	6.63	1.08
						16	4.42	1.00	5.75	1.02	5.89	1.04	5.97	1.06	6.06	1.07	6.27	1.09	6.51	1.11
						18	4.42	1.02	5.60	1.05	5.75	1.07	5.84	1.08	5.93	1.09	6.15	1.11	6.40	1.13
						20	4.42	1.05	5.45	1.07	5.62	1.10	5.71	1.11	5.81	1.12	6.03	1.14	6.29	1.16
						21	4.42	1.06	5.39	1.09	5.55	1.11	5.65	1.12	5.75	1.13	5.98	1.15	6.24	1.17
						23	4.42	1.09	5.25	1.11	5.43	1.14	5.53	1.15	5.63	1.16	5.87	1.18	6.14	1.20
						25	4.42	1.12	5.13	1.14	5.31	1.16	5.42	1.17	5.53	1.19	5.77	1.21	6.05	1.23
						27	4.42	1.15	5.01	1.17	5.20	1.19	5.31	1.20	5.43	1.21	5.68	1.23	5.97	1.25
						29	4.42	1.18	4.90	1.20	5.10	1.22	5.21	1.23	5.33	1.24	5.60	1.26	5.89	1.28
						31	4.42	1.21	4.80	1.23	5.01	1.25	5.12	1.26	5.25	1.27	5.52	1.29	5.82	1.31
						33	4.42	1.24	4.70	1.26	4.92	1.28	5.04	1.29	5.17	1.30	5.45	1.32	5.76	1.34
						35	4.42	1.27	4.61	1.29	4.84	1.31	5.00	1.32	5.10	1.33	5.39	1.35	5.71	1.37
						37	4.42	1.30	4.53	1.32	4.76	1.34	4.89	1.36	5.03	1.37	5.33	1.39	5.66	1.40
						39	4.42	1.33	4.45	1.36	4.70	1.38	4.83	1.39	4.97	1.40	5.28	1.42	5.62	1.44
						42	4.42	1.38	4.35	1.41	4.61	1.43	4.75	1.44	4.90	1.45	5.22	1.47	5.57	1.49
						44	4.42	1.42	4.30	1.44	4.56	1.46	4.70	1.47	4.86	1.48	5.18	1.50	5.55	1.52
						46	4.42	1.45	4.24	1.48	4.52	1.50	4.67	1.51	4.82	1.52	5.16	1.54	5.53	1.56

NOTE

1. Cooling capacity is based on 27°CDB / 19°CWB (indoor temperature), 35°CDB (outdoor temperature).
2. Heating capacity is based on 20°CDB (indoor temperature), 7°CDB/6°CWB (outdoor temperature).
3. The above is the value for connecting with the following indoor units.
   - AJ***TNAPKH : Premium Wind Free
4. Capacities are based on the following conditions:
   - Corresponding refrigerant piping length : 5m / - Level difference : 0m
5. The total ability of connected a indoor unit is up to 8.5kW
6. It is impossible to connect the indoor unit for one room only.
7. This data is reference data for temperature capacity trend.

12. Capacity Table

12-2. AJ050TXJ2KH/EA

HEATING

Combination (Capacity Index)				Combination (Total)	Combination (%)	Outdoor Temperature (°C,DB)	Indoor Temperature (°C, DB)													
							14		16		18		20		21		22		24	
							TC(kW)	PI(kW)	TC(kW)	PI(kW)	TC(kW)	PI(kW)	TC(kW)	PI(kW)	TC(kW)	PI(kW)	TC(kW)	PI(kW)	TC(kW)	PI(kW)
2000				2000	38%	-15	1.26	0.70	1.22	0.71	1.18	0.72	1.17	0.72	1.15	0.73	1.13	0.73	1.11	0.74
						-10	1.51	0.74	1.47	0.75	1.43	0.76	1.41	0.76	1.40	0.77	1.37	0.77	1.34	0.78
						-5	1.76	0.77	1.71	0.78	1.67	0.79	1.66	0.80	1.64	0.80	1.61	0.81	1.58	0.82
						0	2.01	0.81	1.96	0.82	1.92	0.83	1.90	0.84	1.88	0.84	1.85	0.85	1.82	0.86
						2	2.11	0.82	2.06	0.84	2.02	0.85	2.00	0.85	1.98	0.86	1.95	0.87	1.92	0.87
						7	2.31	0.85	2.26	0.86	2.21	0.88	2.20	0.88	2.17	0.89	2.14	0.90	2.11	0.90
						10	2.51	0.88	2.46	0.89	2.41	0.91	2.39	0.91	2.37	0.92	2.33	0.93	2.30	0.93
						15	2.76	0.92	2.71	0.93	2.66	0.94	2.64	0.95	2.61	0.95	2.57	0.96	2.54	0.97
2500				2500	48%	-15	1.83	0.83	1.77	0.85	1.72	0.86	1.70	0.86	1.68	0.87	1.64	0.88	1.61	0.88
						-10	2.19	0.88	2.13	0.89	2.08	0.90	2.05	0.91	2.03	0.91	1.99	0.92	1.95	0.93
						-5	2.56	0.92	2.49	0.94	2.44	0.95	2.41	0.95	2.38	0.96	2.34	0.97	2.30	0.98
						0	2.92	0.96	2.85	0.98	2.79	0.99	2.76	1.00	2.74	1.00	2.69	1.01	2.65	1.02
						2	3.07	0.98	3.00	1.00	2.94	1.01	2.91	1.02	2.88	1.02	2.83	1.03	2.79	1.04
						7	3.36	1.02	3.29	1.03	3.22	1.05	3.20	1.05	3.16	1.06	3.11	1.07	3.07	1.08
						10	3.65	1.05	3.58	1.07	3.51	1.08	3.48	1.09	3.45	1.09	3.39	1.10	3.34	1.12
						15	4.02	1.09	3.94	1.11	3.87	1.12	3.83	1.13	3.80	1.14	3.74	1.15	3.69	1.16
3500				3500	67%	-15	2.29	1.03	2.22	1.05	2.15	1.06	2.13	1.07	2.10	1.07	2.05	1.08	2.01	1.09
						-10	2.74	1.09	2.67	1.10	2.60	1.12	2.57	1.12	2.54	1.13	2.49	1.14	2.44	1.15
						-5	3.20	1.14	3.12	1.16	3.04	1.17	3.01	1.18	2.98	1.19	2.92	1.20	2.88	1.21
						0	3.65	1.19	3.57	1.21	3.49	1.23	3.46	1.24	3.42	1.24	3.36	1.26	3.31	1.27
						2	3.83	1.22	3.75	1.23	3.67	1.25	3.63	1.26	3.60	1.27	3.54	1.28	3.48	1.29
						7	4.20	1.26	4.11	1.28	4.03	1.29	4.00	1.30	3.95	1.31	3.89	1.32	3.83	1.34
						10	4.56	1.30	4.47	1.32	4.38	1.34	4.35	1.35	4.31	1.35	4.24	1.37	4.18	1.38
						15	5.02	1.35	4.92	1.37	4.83	1.39	4.79	1.40	4.75	1.41	4.68	1.42	4.62	1.44
5000				5000	96%	-15	3.09	1.31	2.99	1.33	2.91	1.35	2.87	1.36	2.83	1.36	2.77	1.38	2.72	1.39
						-10	3.70	1.38	3.60	1.40	3.51	1.42	3.47	1.43	3.43	1.44	3.36	1.45	3.30	1.46
						-5	4.32	1.45	4.21	1.47	4.11	1.49	4.07	1.50	4.02	1.51	3.95	1.52	3.88	1.54
						0	4.93	1.52	4.82	1.54	4.71	1.56	4.66	1.57	4.62	1.58	4.54	1.59	4.47	1.61
						2	5.17	1.54	5.06	1.57	4.95	1.59	4.90	1.60	4.86	1.61	4.78	1.62	4.70	1.64
						7	5.67	1.60	5.55	1.62	5.44	1.64	5.40	1.65	5.34	1.66	5.25	1.68	5.17	1.70
						10	6.16	1.65	6.03	1.67	5.92	1.70	5.87	1.71	5.82	1.72	5.72	1.74	5.64	1.75
						15	6.78	1.72	6.65	1.74	6.53	1.77	6.47	1.78	6.42	1.79	6.32	1.81	6.23	1.82
2000	2000			4000	77%	-15	2.52	0.97	2.44	0.98	2.37	1.00	2.34	1.00	2.31	1.01	2.26	1.02	2.21	1.03
						-10	3.02	1.02	2.93	1.04	2.86	1.05	2.82	1.06	2.79	1.06	2.74	1.07	2.69	1.08
						-5	3.52	1.07	3.43	1.09	3.35	1.10	3.31	1.11	3.28	1.11	3.22	1.13	3.16	1.14
						0	4.02	1.12	3.92	1.14	3.84	1.15	3.80	1.16	3.76	1.17	3.70	1.18	3.64	1.19
						2	4.22	1.14	4.12	1.16	4.04	1.17	4.00	1.18	3.96	1.19	3.89	1.20	3.83	1.21
						7	4.62	1.18	4.52	1.20	4.43	1.21	4.40	1.22	4.35	1.23	4.28	1.24	4.21	1.25
						10	5.02	1.22	4.92	1.24	4.82	1.25	4.78	1.26	4.74	1.27	4.66	1.28	4.60	1.30
						15	5.52	1.27	5.41	1.29	5.32	1.31	5.27	1.31	5.23	1.32	5.15	1.34	5.08	1.35
2000	2500			4500	87%	-15	2.92	1.12	2.83	1.14	2.75	1.15	2.71	1.16	2.68	1.17	2.62	1.18	2.56	1.19
						-10	3.50	1.18	3.40	1.20	3.31	1.21	3.27	1.22	3.24	1.23	3.17	1.24	3.12	1.25
						-5	4.08	1.24	3.97	1.26	3.88	1.27	3.84	1.28	3.80	1.29	3.73	1.30	3.67	1.31
						0	4.66	1.30	4.55	1.31	4.45	1.33	4.41	1.34	4.36	1.35	4.29	1.36	4.22	1.37
						2	4.89	1.32	4.78	1.34	4.68	1.36	4.63	1.36	4.59	1.37	4.51	1.39	4.44	1.40
						7	5.35	1.36	5.24	1.38	5.13	1.40	5.10	1.41	5.04	1.42	4.96	1.44	4.89	1.45
						10	5.82	1.41	5.70	1.43	5.59	1.45	5.54	1.46	5.49	1.47	5.41	1.48	5.33	1.50
						15	6.40	1.47	6.28	1.49	6.16	1.51	6.11	1.52	6.06	1.53	5.97	1.54	5.88	1.56

12. Capacity Table

12-2. AJ050TXJ2KH/EA

HEATING

Combination (Capacity Index)				Combination (Total)	Combination (%)	Outdoor Temperature (°C,DB)	Indoor Temperature (°C, DB)													
							14		16		18		20		21		22		24	
							TC(kW)	PI(kW)	TC(kW)	PI(kW)	TC(kW)	PI(kW)	TC(kW)	PI(kW)	TC(kW)	PI(kW)	TC(kW)	PI(kW)	TC(kW)	PI(kW)
2000	3500			5500	106%	-15	3.26	1.21	3.16	1.23	3.07	1.24	3.03	1.25	2.99	1.26	2.92	1.27	2.87	1.28
						-10	3.91	1.27	3.80	1.29	3.70	1.31	3.66	1.32	3.62	1.32	3.54	1.34	3.48	1.35
						-5	4.56	1.33	4.44	1.35	4.34	1.37	4.29	1.38	4.25	1.39	4.17	1.40	4.10	1.41
						0	5.20	1.40	5.08	1.42	4.97	1.44	4.92	1.45	4.88	1.45	4.79	1.47	4.72	1.48
						2	5.46	1.42	5.34	1.44	5.23	1.46	5.18	1.47	5.13	1.48	5.04	1.49	4.96	1.51
						7	5.98	1.47	5.85	1.49	5.74	1.51	5.70	1.52	5.63	1.53	5.54	1.55	5.46	1.56
						10	6.50	1.52	6.37	1.54	6.25	1.56	6.19	1.57	6.14	1.58	6.04	1.60	5.96	1.61
						15	7.15	1.58	7.01	1.60	6.89	1.63	6.83	1.64	6.77	1.65	6.67	1.66	6.58	1.68
2000	5000			7000	135%	-15	3.26	1.14	3.16	1.16	3.07	1.18	3.03	1.18	2.99	1.19	2.92	1.20	2.87	1.21
						-10	3.91	1.20	3.80	1.22	3.70	1.24	3.66	1.25	3.62	1.25	3.54	1.27	3.48	1.28
						-5	4.56	1.26	4.44	1.28	4.34	1.30	4.29	1.31	4.25	1.32	4.17	1.33	4.10	1.34
						0	5.20	1.32	5.08	1.34	4.97	1.36	4.92	1.37	4.88	1.38	4.79	1.39	4.72	1.40
						2	5.46	1.35	5.34	1.37	5.23	1.39	5.18	1.39	5.13	1.40	5.04	1.42	4.96	1.43
						7	5.98	1.39	5.85	1.41	5.74	1.43	5.70	1.44	5.63	1.45	5.54	1.47	5.46	1.48
						10	6.50	1.44	6.37	1.46	6.25	1.48	6.19	1.49	6.14	1.50	6.04	1.52	5.96	1.53
						15	7.15	1.50	7.01	1.52	6.89	1.54	6.83	1.55	6.77	1.56	6.67	1.58	6.58	1.59
2500	2500			5000	96%	-15	3.26	1.23	3.16	1.25	3.07	1.27	3.03	1.27	2.99	1.28	2.92	1.29	2.87	1.30
						-10	3.91	1.30	3.80	1.32	3.70	1.33	3.66	1.34	3.62	1.35	3.54	1.36	3.48	1.37
						-5	4.56	1.36	4.44	1.38	4.34	1.40	4.29	1.41	4.25	1.42	4.17	1.43	4.10	1.44
						0	5.20	1.42	5.08	1.45	4.97	1.46	4.92	1.47	4.88	1.48	4.79	1.50	4.72	1.51
						2	5.46	1.45	5.34	1.47	5.23	1.49	5.18	1.50	5.13	1.51	5.04	1.52	4.96	1.54
						7	5.98	1.50	5.85	1.52	5.74	1.54	5.70	1.55	5.63	1.56	5.54	1.58	5.46	1.59
						10	6.50	1.55	6.37	1.57	6.25	1.59	6.19	1.60	6.14	1.61	6.04	1.63	5.96	1.65
						15	7.15	1.61	7.01	1.64	6.89	1.66	6.83	1.67	6.77	1.68	6.67	1.70	6.58	1.71
2500	3500			6000	115%	-15	3.26	1.23	3.16	1.25	3.07	1.27	3.03	1.27	2.99	1.28	2.92	1.29	2.87	1.30
						-10	3.91	1.30	3.80	1.32	3.70	1.33	3.66	1.34	3.62	1.35	3.54	1.36	3.48	1.37
						-5	4.56	1.36	4.44	1.38	4.34	1.40	4.29	1.41	4.25	1.42	4.17	1.43	4.10	1.44
						0	5.20	1.42	5.08	1.45	4.97	1.46	4.92	1.47	4.88	1.48	4.79	1.50	4.72	1.51
						2	5.46	1.45	5.34	1.47	5.23	1.49	5.18	1.50	5.13	1.51	5.04	1.52	4.96	1.54
						7	5.98	1.50	5.85	1.52	5.74	1.54	5.70	1.55	5.63	1.56	5.54	1.58	5.46	1.59
						10	6.50	1.55	6.37	1.57	6.25	1.59	6.19	1.60	6.14	1.61	6.04	1.63	5.96	1.65
						15	7.15	1.61	7.01	1.64	6.89	1.66	6.83	1.67	6.77	1.68	6.67	1.70	6.58	1.71
2500	5000			7500	144%	-15	3.26	1.14	3.16	1.16	3.07	1.18	3.03	1.18	2.99	1.19	2.92	1.20	2.87	1.21
						-10	3.91	1.20	3.80	1.22	3.70	1.24	3.66	1.25	3.62	1.25	3.54	1.27	3.48	1.28
						-5	4.56	1.26	4.44	1.28	4.34	1.30	4.29	1.31	4.25	1.32	4.17	1.33	4.10	1.34
						0	5.20	1.32	5.08	1.34	4.97	1.36	4.92	1.37	4.88	1.38	4.79	1.39	4.72	1.40
						2	5.46	1.35	5.34	1.37	5.23	1.39	5.18	1.39	5.13	1.40	5.04	1.42	4.96	1.43
						7	5.98	1.39	5.85	1.41	5.74	1.43	5.70	1.44	5.63	1.45	5.54	1.47	5.46	1.48
						10	6.50	1.44	6.37	1.46	6.25	1.48	6.19	1.49	6.14	1.50	6.04	1.52	5.96	1.53
						15	7.15	1.50	7.01	1.52	6.89	1.54	6.83	1.55	6.77	1.56	6.67	1.58	6.58	1.59
3500	3500			7000	135%	-15	3.26	1.17	3.16	1.19	3.07	1.20	3.03	1.21	2.99	1.22	2.92	1.23	2.87	1.24
						-10	3.91	1.23	3.80	1.25	3.70	1.26	3.66	1.27	3.62	1.28	3.54	1.29	3.48	1.30
						-5	4.56	1.29	4.44	1.31	4.34	1.33	4.29	1.34	4.25	1.34	4.17	1.36	4.10	1.37
						0	5.20	1.35	5.08	1.37	4.97	1.39	4.92	1.40	4.88	1.41	4.79	1.42	4.72	1.43
						2	5.46	1.37	5.34	1.40	5.23	1.41	5.18	1.42	5.13	1.43	5.04	1.45	4.96	1.46
						7	5.98	1.42	5.85	1.44	5.74	1.46	5.70	1.47	5.63	1.48	5.54	1.50	5.46	1.51
						10	6.50	1.47	6.37	1.49	6.25	1.51	6.19	1.52	6.14	1.53	6.04	1.55	5.96	1.56
						15	7.15	1.53	7.01	1.55	6.89	1.57	6.83	1.58	6.77	1.59	6.67	1.61	6.58	1.63

12. Capacity Table

12-2. AJ050TXJ2KH/EA

HEATING

Combination (Capacity Index)				Combination (Total)	Combination (%)	Outdoor Temperature (°C,DB)	Indoor Temperature (°C, DB)													
							14		16		18		20		21		22		24	
							TC(kW)	PI(kW)	TC(kW)	PI(kW)	TC(kW)	PI(kW)	TC(kW)	PI(kW)	TC(kW)	PI(kW)	TC(kW)	PI(kW)	TC(kW)	PI(kW)
3500	5000			8500	144%	-15	3.26	1.07	3.16	1.09	3.07	1.10	3.03	1.11	2.99	1.12	2.92	1.13	2.87	1.14
						-10	3.91	1.13	3.80	1.15	3.70	1.16	3.66	1.17	3.62	1.17	3.54	1.19	3.48	1.20
						-5	4.56	1.19	4.44	1.20	4.34	1.22	4.29	1.23	4.25	1.23	4.17	1.25	4.10	1.26
						0	5.20	1.24	5.08	1.26	4.97	1.28	4.92	1.28	4.88	1.29	4.79	1.30	4.72	1.32
						2	5.46	1.26	5.34	1.28	5.23	1.30	5.18	1.31	5.13	1.31	5.04	1.33	4.96	1.34
						7	5.98	1.31	5.85	1.33	5.74	1.34	5.70	1.35	5.63	1.36	5.54	1.37	5.46	1.39
						10	6.50	1.35	6.37	1.37	6.25	1.39	6.19	1.40	6.14	1.41	6.04	1.42	5.96	1.43
						15	7.15	1.40	7.01	1.43	6.89	1.44	6.83	1.45	6.77	1.46	6.67	1.48	6.58	1.49

NOTE

1. Cooling capacity is based on 27°CDB / 19°CWB (indoor temperature), 35°CDB (outdoor temperature).
2. Heating capacity is based on 20°CDB (indoor temperature), 7°CDB/6°CWB (outdoor temperature).
3. The above is the value for connecting with the following indoor units.
   - AJ***TNAPKH : Premium Wind Free
4. Capacities are based on the following conditions:
   - Corresponding refrigerant piping length : 5m / - Level difference : 0m
5. The total ability of connected a indoor unit is up to 8.5kW
6. It is impossible to connect the indoor unit for one room only.
7. This data is reference data for temperature capacity trend.

12. Capacity Table

12-3. AJ068TXJ3KH/EA

COOLING

Combination (Capacity Index)				Combination (Total)	Combination (%)	Outdoor Temperature (°C,DB)	Indoor Temperature (°C, WB)													
							14		16		18		19		20		22		24	
							TC(kW)	PI(kW)	TC(kW)	PI(kW)	TC(kW)	PI(kW)	TC(kW)	PI(kW)	TC(kW)	PI(kW)	TC(kW)	PI(kW)	TC(kW)	PI(kW)
2000				2000	29%	10	1.60	0.36	2.32	0.41	2.42	0.44	2.46	0.46	2.51	0.47	2.61	0.49	2.71	0.51
						12	1.60	0.38	2.28	0.42	2.38	0.45	2.43	0.47	2.48	0.48	2.57	0.50	2.67	0.52
						14	1.60	0.40	2.24	0.44	2.34	0.47	2.39	0.48	2.44	0.50	2.53	0.52	2.63	0.53
						16	1.60	0.41	2.21	0.45	2.30	0.48	2.35	0.50	2.40	0.51	2.50	0.53	2.59	0.54
						18	1.60	0.43	2.17	0.47	2.27	0.50	2.31	0.51	2.36	0.52	2.46	0.54	2.55	0.55
						20	1.60	0.45	2.13	0.48	2.23	0.51	2.28	0.52	2.32	0.53	2.42	0.55	2.52	0.56
						21	1.60	0.46	2.12	0.49	2.21	0.52	2.26	0.53	2.30	0.54	2.40	0.56	2.50	0.57
						23	1.60	0.48	2.08	0.51	2.17	0.53	2.22	0.55	2.27	0.56	2.36	0.57	2.46	0.58
						25	1.60	0.49	2.04	0.53	2.14	0.55	2.18	0.56	2.23	0.57	2.32	0.58	2.42	0.59
						27	1.60	0.51	2.01	0.54	2.10	0.57	2.15	0.58	2.19	0.58	2.29	0.60	2.38	0.60
						29	1.60	0.53	1.97	0.56	2.06	0.58	2.11	0.59	2.16	0.60	2.25	0.61	2.34	0.61
						31	1.60	0.55	1.94	0.58	2.03	0.60	2.07	0.61	2.12	0.61	2.21	0.62	2.30	0.62
						33	1.60	0.57	1.90	0.60	1.99	0.61	2.04	0.62	2.08	0.63	2.17	0.64	2.27	0.64
						35	1.60	0.59	1.86	0.61	1.95	0.63	2.00	0.63	2.04	0.64	2.14	0.65	2.23	0.65
						37	1.60	0.61	1.83	0.63	1.92	0.65	1.96	0.65	2.01	0.66	2.10	0.66	2.19	0.66
						39	1.60	0.63	1.79	0.65	1.88	0.67	1.93	0.67	1.97	0.68	2.06	0.68	2.15	0.68
						42	1.58	0.66	1.74	0.68	1.83	0.69	1.87	0.70	1.92	0.70	2.01	0.70	2.10	0.70
						44	1.50	0.68	1.71	0.70	1.79	0.71	1.84	0.71	1.88	0.72	1.97	0.72	2.06	0.71
						46	1.46	0.70	1.67	0.72	1.76	0.73	1.80	0.73	1.84	0.73	1.93	0.73	2.02	0.72
2500				2500	37%	10	2.00	0.46	2.90	0.51	3.02	0.55	3.08	0.57	3.14	0.59	3.26	0.62	3.39	0.64
						12	2.00	0.48	2.85	0.53	2.97	0.57	3.03	0.59	3.09	0.60	3.22	0.63	3.34	0.65
						14	2.00	0.50	2.80	0.55	2.93	0.59	2.99	0.61	3.05	0.62	3.17	0.65	3.29	0.66
						16	2.00	0.52	2.76	0.57	2.88	0.61	2.94	0.62	3.00	0.64	3.12	0.66	3.24	0.68
						18	2.00	0.54	2.71	0.59	2.83	0.62	2.89	0.64	2.95	0.65	3.07	0.68	3.19	0.69
						20	2.00	0.56	2.67	0.61	2.79	0.64	2.85	0.66	2.90	0.67	3.02	0.69	3.14	0.70
						21	2.00	0.58	2.64	0.62	2.76	0.65	2.82	0.67	2.88	0.68	3.00	0.70	3.12	0.71
						23	2.00	0.60	2.60	0.64	2.72	0.67	2.78	0.68	2.83	0.70	2.95	0.71	3.07	0.72
						25	2.00	0.62	2.55	0.66	2.67	0.69	2.73	0.70	2.79	0.71	2.91	0.73	3.02	0.74
						27	2.00	0.64	2.51	0.68	2.62	0.71	2.68	0.72	2.74	0.73	2.86	0.75	2.98	0.75
						29	2.00	0.67	2.46	0.70	2.58	0.73	2.64	0.74	2.69	0.75	2.81	0.76	2.93	0.77
						31	2.00	0.69	2.42	0.72	2.53	0.75	2.59	0.76	2.65	0.77	2.76	0.78	2.88	0.78
						33	2.00	0.71	2.37	0.75	2.49	0.77	2.54	0.78	2.60	0.79	2.72	0.80	2.83	0.80
						35	2.00	0.74	2.33	0.77	2.44	0.79	2.50	0.79	2.56	0.81	2.67	0.81	2.78	0.82
						37	2.00	0.76	2.29	0.79	2.40	0.81	2.45	0.82	2.51	0.83	2.62	0.83	2.74	0.83
						39	2.00	0.79	2.24	0.82	2.35	0.84	2.41	0.84	2.46	0.85	2.58	0.85	2.69	0.85
						42	1.98	0.83	2.18	0.85	2.29	0.87	2.34	0.87	2.40	0.88	2.51	0.88	2.62	0.87
						44	1.88	0.85	2.13	0.88	2.24	0.89	2.30	0.90	2.35	0.90	2.46	0.90	2.57	0.89
						46	1.83	0.88	2.09	0.90	2.20	0.91	2.25	0.92	2.30	0.92	2.41	0.92	2.53	0.91

12. Capacity Table

12-3. AJ068TXJ3KH/EA

COOLING

Combination (Capacity Index)				Combination (Total)	Combination (%)	Outdoor Temperature (°C,DB)	Indoor Temperature (°C, WB)													
							14		16		18		19		20		22		24	
							TC(kW)	PI(kW)	TC(kW)	PI(kW)	TC(kW)	PI(kW)	TC(kW)	PI(kW)	TC(kW)	PI(kW)	TC(kW)	PI(kW)	TC(kW)	PI(kW)
						10	2.80	0.62	4.06	0.69	4.23	0.75	4.31	0.77	4.40	0.80	4.57	0.84	4.74	0.87
						12	2.80	0.65	3.99	0.71	4.16	0.77	4.25	0.80	4.33	0.82	4.50	0.86	4.68	0.88
						14	2.80	0.68	3.93	0.74	4.10	0.80	4.18	0.82	4.26	0.84	4.44	0.88	4.61	0.90
						16	2.80	0.70	3.86	0.77	4.03	0.82	4.11	0.84	4.20	0.86	4.37	0.90	4.54	0.92
						18	2.80	0.73	3.80	0.79	3.96	0.84	4.05	0.87	4.13	0.89	4.30	0.92	4.47	0.94
						20	2.80	0.76	3.73	0.82	3.90	0.87	3.98	0.89	4.07	0.91	4.23	0.94	4.40	0.95
						21	2.80	0.78	3.70	0.84	3.87	0.88	3.95	0.90	4.03	0.92	4.20	0.95	4.37	0.96
						23	2.80	0.81	3.64	0.86	3.80	0.91	3.89	0.93	3.97	0.94	4.13	0.97	4.30	0.98
						25	2.80	0.84	3.58	0.89	3.74	0.93	3.82	0.95	3.90	0.97	4.07	0.99	4.23	1.00
3500				3500	51%	27	2.80	0.87	3.51	0.92	3.67	0.96	3.76	0.98	3.84	0.99	4.00	1.01	4.17	1.02
						29	2.80	0.90	3.45	0.95	3.61	0.99	3.69	1.00	3.77	1.02	3.93	1.03	4.10	1.04
						31	2.80	0.94	3.39	0.98	3.55	1.02	3.63	1.03	3.71	1.04	3.87	1.06	4.03	1.06
						33	2.80	0.97	3.32	1.01	3.48	1.04	3.56	1.06	3.64	1.07	3.80	1.08	3.97	1.08
						35	2.80	1.00	3.26	1.04	3.42	1.07	3.50	1.07	3.58	1.09	3.74	1.10	3.90	1.10
						37	2.80	1.03	3.20	1.07	3.36	1.10	3.43	1.11	3.51	1.12	3.67	1.13	3.83	1.13
						39	2.80	1.07	3.14	1.11	3.29	1.13	3.37	1.14	3.45	1.15	3.61	1.15	3.77	1.15
						42	2.77	1.12	3.05	1.15	3.20	1.18	3.28	1.18	3.35	1.19	3.51	1.19	3.67	1.18
						44	2.63	1.16	2.98	1.19	3.14	1.21	3.21	1.21	3.29	1.22	3.45	1.22	3.60	1.21
						46	2.56	1.19	2.92	1.22	3.07	1.24	3.15	1.24	3.23	1.25	3.38	1.24	3.54	1.23
						10	4.00	0.94	5.79	1.04	6.04	1.13	6.16	1.17	6.28	1.21	6.53	1.27	6.78	1.31
						12	4.00	0.98	5.70	1.08	5.94	1.17	6.07	1.21	6.19	1.24	6.43	1.30	6.68	1.34
						14	4.00	1.02	5.61	1.12	5.85	1.21	5.97	1.24	6.09	1.27	6.34	1.33	6.58	1.36
						16	4.00	1.07	5.52	1.16	5.76	1.24	5.88	1.28	6.00	1.31	6.24	1.36	6.48	1.39
						18	4.00	1.11	5.43	1.20	5.66	1.28	5.78	1.31	5.90	1.34	6.14	1.39	6.39	1.42
						20	4.00	1.16	5.34	1.24	5.57	1.32	5.69	1.35	5.81	1.37	6.05	1.42	6.29	1.44
						21	4.00	1.18	5.29	1.27	5.53	1.34	5.64	1.37	5.76	1.39	6.00	1.43	6.24	1.46
						23	4.00	1.23	5.20	1.31	5.43	1.38	5.55	1.40	5.67	1.43	5.91	1.46	6.14	1.49
						25	4.00	1.27	5.11	1.35	5.34	1.42	5.46	1.44	5.57	1.46	5.81	1.50	6.05	1.52
5000				5000	74%	27	4.00	1.32	5.02	1.40	5.25	1.46	5.37	1.48	5.48	1.50	5.72	1.53	5.95	1.55
						29	4.00	1.37	4.93	1.44	5.16	1.50	5.27	1.52	5.39	1.54	5.62	1.56	5.86	1.58
						31	4.00	1.42	4.84	1.49	5.07	1.54	5.18	1.56	5.30	1.58	5.53	1.60	5.76	1.61
						33	4.00	1.47	4.75	1.53	4.98	1.58	5.09	1.60	5.20	1.62	5.43	1.64	5.66	1.64
						35	4.00	1.52	4.66	1.58	4.89	1.62	5.00	1.62	5.11	1.66	5.34	1.67	5.57	1.67
						37	4.00	1.57	4.57	1.63	4.79	1.67	4.91	1.68	5.02	1.70	5.25	1.71	5.47	1.70
						39	4.00	1.62	4.48	1.67	4.70	1.71	4.82	1.73	4.93	1.74	5.15	1.75	5.38	1.74
						42	3.95	1.70	4.35	1.75	4.57	1.78	4.68	1.79	4.79	1.80	5.01	1.80	5.24	1.79
						44	3.75	1.75	4.26	1.80	4.48	1.83	4.59	1.84	4.70	1.84	4.92	1.84	5.14	1.83
						46	3.65	1.80	4.18	1.85	4.39	1.87	4.50	1.88	4.61	1.89	4.83	1.88	5.05	1.86

12. Capacity Table

12-3. AJ068TXJ3KH/EA

COOLING

Combination (Capacity Index)				Combination (Total)	Combination (%)	Outdoor Temperature (°C,DB)	Indoor Temperature (°C, WB)													
							14		16		18		19		20		22		24	
							TC(kW)	PI(kW)	TC(kW)	PI(kW)	TC(kW)	PI(kW)	TC(kW)	PI(kW)	TC(kW)	PI(kW)	TC(kW)	PI(kW)	TC(kW)	PI(kW)
2000	2000			4000	59%	10	3.53	0.87	4.99	0.89	5.08	0.91	5.14	0.92	5.20	0.94	5.35	0.95	5.52	0.97
						12	3.53	0.89	4.85	0.91	4.95	0.94	5.01	0.95	5.08	0.96	5.23	0.98	5.41	1.00
						14	3.53	0.92	4.72	0.94	4.83	0.96	4.89	0.97	4.96	0.98	5.12	1.00	5.31	1.02
						16	3.53	0.94	4.60	0.96	4.71	0.98	4.78	0.99	4.85	1.00	5.02	1.02	5.21	1.04
						18	3.53	0.96	4.48	0.98	4.60	1.01	4.67	1.02	4.75	1.03	4.92	1.04	5.12	1.06
						20	3.53	0.99	4.36	1.01	4.49	1.03	4.57	1.04	4.65	1.05	4.83	1.07	5.03	1.09
						21	3.53	1.00	4.31	1.02	4.44	1.04	4.52	1.05	4.60	1.06	4.78	1.08	4.99	1.10
						23	3.53	1.03	4.20	1.05	4.34	1.07	4.42	1.08	4.51	1.09	4.70	1.11	4.91	1.13
						25	3.53	1.05	4.10	1.07	4.25	1.09	4.33	1.10	4.42	1.11	4.62	1.13	4.84	1.15
						27	3.53	1.08	4.01	1.10	4.16	1.12	4.25	1.13	4.34	1.14	4.55	1.16	4.78	1.18
						29	3.53	1.11	3.92	1.13	4.08	1.15	4.17	1.16	4.27	1.17	4.48	1.19	4.72	1.20
						31	3.53	1.13	3.84	1.15	4.01	1.18	4.10	1.19	4.20	1.19	4.42	1.21	4.66	1.23
						33	3.53	1.16	3.76	1.18	3.94	1.20	4.03	1.21	4.13	1.22	4.36	1.24	4.61	1.26
						35	3.53	1.19	3.69	1.21	3.87	1.23	4.00	1.24	4.08	1.25	4.31	1.27	4.57	1.29
						37	3.53	1.22	3.62	1.24	3.81	1.26	3.91	1.27	4.02	1.28	4.26	1.30	4.53	1.32
						39	3.53	1.25	3.56	1.27	3.76	1.29	3.86	1.30	3.98	1.31	4.22	1.33	4.49	1.35
						42	3.53	1.30	3.48	1.32	3.69	1.34	3.80	1.35	3.92	1.36	4.17	1.38	4.46	1.40
						44	3.53	1.33	3.44	1.35	3.65	1.37	3.76	1.38	3.89	1.39	4.15	1.41	4.44	1.43
						46	3.53	1.37	3.39	1.39	3.61	1.41	3.73	1.42	3.86	1.43	4.13	1.44	4.42	1.46
2000	2500			4500	66%	10	3.98	0.99	5.61	1.02	5.72	1.04	5.78	1.05	5.85	1.06	6.01	1.09	6.21	1.11
						12	3.98	1.02	5.46	1.04	5.57	1.06	5.64	1.08	5.71	1.09	5.89	1.11	6.09	1.13
						14	3.98	1.04	5.31	1.07	5.43	1.09	5.50	1.10	5.58	1.11	5.76	1.14	5.97	1.16
						16	3.98	1.07	5.17	1.09	5.30	1.12	5.38	1.13	5.46	1.14	5.65	1.16	5.86	1.18
						18	3.98	1.09	5.04	1.12	5.17	1.14	5.25	1.15	5.34	1.17	5.53	1.19	5.76	1.21
						20	3.98	1.12	4.91	1.15	5.05	1.17	5.14	1.18	5.23	1.19	5.43	1.22	5.66	1.24
						21	3.98	1.14	4.85	1.16	5.00	1.18	5.08	1.20	5.17	1.21	5.38	1.23	5.62	1.25
						23	3.98	1.17	4.73	1.19	4.89	1.21	4.98	1.23	5.07	1.24	5.29	1.26	5.53	1.28
						25	3.98	1.20	4.62	1.22	4.78	1.24	4.87	1.25	4.98	1.27	5.20	1.29	5.45	1.31
						27	3.98	1.23	4.51	1.25	4.68	1.27	4.78	1.28	4.88	1.30	5.11	1.32	5.37	1.34
						29	3.98	1.26	4.41	1.28	4.59	1.30	4.69	1.32	4.80	1.33	5.04	1.35	5.30	1.37
						31	3.98	1.29	4.32	1.31	4.51	1.34	4.61	1.35	4.72	1.36	4.97	1.38	5.24	1.40
						33	3.98	1.32	4.23	1.35	4.43	1.37	4.54	1.38	4.65	1.39	4.90	1.41	5.19	1.43
						35	3.98	1.36	4.15	1.38	4.35	1.40	4.50	1.41	4.59	1.42	4.85	1.45	5.14	1.47
						37	3.98	1.39	4.08	1.41	4.29	1.44	4.40	1.45	4.53	1.46	4.80	1.48	5.09	1.50
						39	3.98	1.42	4.01	1.45	4.23	1.47	4.35	1.48	4.48	1.49	4.75	1.51	5.06	1.53
						42	3.98	1.48	3.92	1.50	4.15	1.52	4.27	1.54	4.41	1.55	4.70	1.57	5.01	1.59
						44	3.98	1.52	3.87	1.54	4.10	1.56	4.23	1.57	4.37	1.58	4.67	1.60	4.99	1.62
						46	3.98	1.55	3.82	1.58	4.07	1.60	4.20	1.61	4.34	1.62	4.64	1.64	4.98	1.66

12. Capacity Table

12-3. AJ068TXJ3KH/EA

COOLING

Combination (Capacity Index)				Combination (Total)	Combination (%)	Outdoor Temperature (°C,DB)	Indoor Temperature (°C, WB)													
							14		16		18		19		20		22		24	
							TC(kW)	PI(kW)	TC(kW)	PI(kW)	TC(kW)	PI(kW)	TC(kW)	PI(kW)	TC(kW)	PI(kW)	TC(kW)	PI(kW)	TC(kW)	PI(kW)
2000	3500			5500	81%	10	4.86	1.29	6.86	1.32	6.99	1.35	7.06	1.36	7.15	1.38	7.35	1.41	7.59	1.44
						12	4.86	1.32	6.67	1.35	6.81	1.38	6.89	1.40	6.98	1.41	7.19	1.44	7.44	1.47
						14	4.86	1.35	6.49	1.38	6.64	1.41	6.73	1.43	6.82	1.44	7.04	1.47	7.30	1.50
						16	4.86	1.39	6.32	1.42	6.48	1.45	6.57	1.46	6.67	1.48	6.90	1.51	7.16	1.54
						18	4.86	1.42	6.16	1.45	6.32	1.48	6.42	1.50	6.53	1.51	6.76	1.54	7.04	1.57
						20	4.86	1.46	6.00	1.49	6.18	1.52	6.28	1.53	6.39	1.55	6.64	1.58	6.92	1.61
						21	4.86	1.48	5.92	1.51	6.11	1.54	6.21	1.55	6.32	1.57	6.58	1.60	6.86	1.62
						23	4.86	1.51	5.78	1.54	5.97	1.58	6.08	1.59	6.20	1.60	6.46	1.63	6.76	1.66
						25	4.86	1.55	5.64	1.58	5.84	1.61	5.96	1.63	6.08	1.64	6.35	1.67	6.66	1.70
						27	4.86	1.59	5.51	1.62	5.72	1.65	5.84	1.67	5.97	1.68	6.25	1.71	6.57	1.74
						29	4.86	1.63	5.39	1.66	5.61	1.69	5.74	1.71	5.87	1.72	6.16	1.75	6.48	1.78
						31	4.86	1.67	5.28	1.70	5.51	1.73	5.64	1.75	5.77	1.76	6.07	1.79	6.41	1.82
						33	4.86	1.72	5.17	1.75	5.41	1.78	5.54	1.79	5.69	1.81	5.99	1.83	6.34	1.86
						35	4.86	1.76	5.07	1.79	5.32	1.82	5.50	1.83	5.61	1.85	5.92	1.88	6.28	1.90
						37	4.86	1.80	4.98	1.83	5.24	1.86	5.38	1.88	5.53	1.89	5.86	1.92	6.23	1.95
						39	4.86	1.85	4.90	1.88	5.17	1.91	5.31	1.92	5.47	1.94	5.81	1.97	6.18	1.99
						42	4.86	1.92	4.79	1.95	5.07	1.98	5.22	1.99	5.39	2.01	5.74	2.03	6.13	2.06
						44	4.86	1.97	4.72	2.00	5.02	2.03	5.17	2.04	5.34	2.05	5.70	2.08	6.10	2.11
						46	4.86	2.02	4.67	2.05	4.97	2.08	5.13	2.09	5.30	2.10	5.68	2.13	6.08	2.16
2000	5000			7000	103%	10	5.74	1.41	8.10	1.44	8.26	1.47	8.35	1.49	8.45	1.51	8.69	1.54	8.97	1.57
						12	5.74	1.44	7.88	1.48	8.05	1.51	8.15	1.53	8.25	1.54	8.50	1.57	8.79	1.61
						14	5.74	1.48	7.67	1.51	7.85	1.55	7.95	1.56	8.06	1.58	8.32	1.61	8.62	1.64
						16	5.74	1.51	7.47	1.55	7.66	1.58	7.76	1.60	7.88	1.62	8.15	1.65	8.47	1.68
						18	5.74	1.55	7.28	1.59	7.47	1.62	7.59	1.64	7.71	1.65	7.99	1.69	8.32	1.72
						20	5.74	1.59	7.09	1.63	7.30	1.66	7.42	1.68	7.55	1.69	7.84	1.72	8.18	1.75
						21	5.74	1.61	7.00	1.65	7.22	1.68	7.34	1.70	7.47	1.71	7.77	1.74	8.11	1.77
						23	5.74	1.65	6.83	1.69	7.06	1.72	7.19	1.74	7.33	1.75	7.63	1.78	7.99	1.81
						25	5.74	1.70	6.67	1.73	6.91	1.76	7.04	1.78	7.19	1.80	7.51	1.83	7.87	1.86
						27	5.74	1.74	6.52	1.77	6.77	1.81	6.91	1.82	7.06	1.84	7.39	1.87	7.76	1.90
						29	5.74	1.78	6.37	1.82	6.63	1.85	6.78	1.87	6.93	1.88	7.28	1.91	7.66	1.94
						31	5.74	1.83	6.24	1.86	6.51	1.90	6.66	1.91	6.82	1.93	7.18	1.96	7.57	1.99
						33	5.74	1.87	6.11	1.91	6.40	1.94	6.55	1.96	6.72	1.97	7.08	2.00	7.49	2.03
						35	5.74	1.92	6.00	1.96	6.29	1.99	6.50	2.00	6.63	2.02	7.00	2.05	7.42	2.08
						37	5.74	1.97	5.89	2.00	6.19	2.04	6.36	2.05	6.54	2.07	6.93	2.10	7.36	2.13
						39	5.74	2.02	5.79	2.05	6.11	2.09	6.28	2.10	6.46	2.12	6.86	2.15	7.30	2.18
						42	5.74	2.10	5.66	2.13	5.99	2.16	6.17	2.18	6.37	2.19	6.78	2.22	7.24	2.25
						44	5.74	2.15	5.58	2.18	5.93	2.21	6.12	2.23	6.31	2.25	6.74	2.28	7.21	2.30
						46	5.74	2.20	5.52	2.24	5.87	2.27	6.07	2.28	6.27	2.30	6.71	2.33	7.19	2.36

12. Capacity Table

12-3. AJ068TXJ3KH/EA

COOLING

Combination (Capacity Index)				Combination (Total)	Combination (%)	Outdoor Temperature (°C,DB)	Indoor Temperature (°C, WB)													
							14		16		18		19		20		22		24	
							TC(kW)	PI(kW)	TC(kW)	PI(kW)	TC(kW)	PI(kW)	TC(kW)	PI(kW)	TC(kW)	PI(kW)	TC(kW)	PI(kW)	TC(kW)	PI(kW)
2500	2500			5000	74%	10	4.42	1.17	6.23	1.20	6.35	1.22	6.42	1.24	6.50	1.25	6.68	1.28	6.90	1.30
						12	4.42	1.20	6.06	1.22	6.19	1.25	6.27	1.27	6.35	1.28	6.54	1.31	6.76	1.33
						14	4.42	1.23	5.90	1.25	6.04	1.28	6.12	1.30	6.20	1.31	6.40	1.34	6.63	1.36
						16	4.42	1.26	5.75	1.29	5.89	1.31	5.97	1.33	6.06	1.34	6.27	1.37	6.51	1.39
						18	4.42	1.29	5.60	1.32	5.75	1.35	5.84	1.36	5.93	1.37	6.15	1.40	6.40	1.42
						20	4.42	1.32	5.45	1.35	5.62	1.38	5.71	1.39	5.81	1.41	6.03	1.43	6.29	1.46
						21	4.42	1.34	5.39	1.37	5.55	1.39	5.65	1.41	5.75	1.42	5.98	1.45	6.24	1.47
						23	4.42	1.37	5.25	1.40	5.43	1.43	5.53	1.44	5.63	1.46	5.87	1.48	6.14	1.51
						25	4.42	1.41	5.13	1.44	5.31	1.46	5.42	1.48	5.53	1.49	5.77	1.52	6.05	1.54
						27	4.42	1.44	5.01	1.47	5.20	1.50	5.31	1.51	5.43	1.53	5.68	1.55	5.97	1.58
						29	4.42	1.48	4.90	1.51	5.10	1.54	5.21	1.55	5.33	1.56	5.60	1.59	5.89	1.61
						31	4.42	1.52	4.80	1.55	5.01	1.57	5.12	1.59	5.25	1.60	5.52	1.63	5.82	1.65
						33	4.42	1.56	4.70	1.58	4.92	1.61	5.04	1.62	5.17	1.64	5.45	1.66	5.76	1.69
						35	4.42	1.60	4.61	1.62	4.84	1.65	5.00	1.66	5.10	1.68	5.39	1.70	5.71	1.73
						37	4.42	1.64	4.53	1.66	4.76	1.69	4.89	1.70	5.03	1.72	5.33	1.74	5.66	1.77
						39	4.42	1.68	4.45	1.71	4.70	1.73	4.83	1.74	4.97	1.76	5.28	1.78	5.62	1.81
						42	4.42	1.74	4.35	1.77	4.61	1.80	4.75	1.81	4.90	1.82	5.22	1.85	5.57	1.87
						44	4.42	1.78	4.30	1.81	4.56	1.84	4.70	1.85	4.86	1.86	5.18	1.89	5.55	1.91
						46	4.42	1.83	4.24	1.86	4.52	1.88	4.67	1.90	4.82	1.91	5.16	1.93	5.53	1.96
2500	3500			6000	88%	10	5.30	1.39	7.48	1.43	7.62	1.46	7.71	1.48	7.80	1.49	8.02	1.52	8.28	1.56
						12	5.30	1.43	7.28	1.46	7.43	1.49	7.52	1.51	7.62	1.53	7.85	1.56	8.11	1.59
						14	5.30	1.46	7.08	1.50	7.24	1.53	7.34	1.55	7.44	1.56	7.68	1.59	7.96	1.62
						16	5.30	1.50	6.89	1.53	7.07	1.57	7.17	1.58	7.28	1.60	7.53	1.63	7.81	1.66
						18	5.30	1.54	6.72	1.57	6.90	1.61	7.00	1.62	7.12	1.64	7.38	1.67	7.68	1.70
						20	5.30	1.58	6.55	1.61	6.74	1.64	6.85	1.66	6.97	1.68	7.24	1.71	7.55	1.74
						21	5.30	1.60	6.46	1.63	6.66	1.66	6.78	1.68	6.90	1.70	7.17	1.73	7.49	1.76
						23	5.30	1.64	6.31	1.67	6.51	1.70	6.63	1.72	6.76	1.74	7.05	1.77	7.37	1.80
						25	5.30	1.68	6.16	1.71	6.38	1.75	6.50	1.76	6.63	1.78	6.93	1.81	7.26	1.84
						27	5.30	1.72	6.02	1.76	6.25	1.79	6.37	1.80	6.51	1.82	6.82	1.85	7.16	1.88
						29	5.30	1.77	5.88	1.80	6.12	1.83	6.26	1.85	6.40	1.86	6.72	1.89	7.07	1.92
						31	5.30	1.81	5.76	1.84	6.01	1.88	6.15	1.89	6.30	1.91	6.62	1.94	6.99	1.97
						33	5.30	1.86	5.64	1.89	5.90	1.92	6.05	1.94	6.20	1.95	6.54	1.98	6.92	2.01
						35	5.30	1.90	5.54	1.94	5.81	1.97	6.00	1.98	6.12	2.00	6.46	2.03	6.85	2.06
						37	5.30	1.95	5.44	1.98	5.72	2.02	5.87	2.03	6.04	2.05	6.39	2.08	6.79	2.11
						39	5.30	2.00	5.34	2.03	5.64	2.07	5.80	2.08	5.97	2.10	6.34	2.13	6.74	2.15
						42	5.30	2.08	5.22	2.11	5.53	2.14	5.70	2.16	5.88	2.17	6.26	2.20	6.68	2.23
						44	5.30	2.13	5.15	2.16	5.47	2.19	5.64	2.21	5.83	2.22	6.22	2.25	6.65	2.28
						46	5.30	2.18	5.09	2.21	5.42	2.25	5.60	2.26	5.79	2.28	6.19	2.30	6.63	2.33

12. Capacity Table

12-3. AJ068TXJ3KH/EA

COOLING

Combination (Capacity Index)				Combination (Total)	Combination (%)	Outdoor Temperature (°C,DB)	Indoor Temperature (°C, WB)													
							14		16		18		19		20		22		24	
							TC(kW)	PI(kW)	TC(kW)	PI(kW)	TC(kW)	PI(kW)	TC(kW)	PI(kW)	TC(kW)	PI(kW)	TC(kW)	PI(kW)	TC(kW)	PI(kW)
						10	6.01	1.47	8.48	1.51	8.64	1.54	8.73	1.56	8.84	1.58	9.09	1.61	9.38	1.64
						12	6.01	1.51	8.25	1.54	8.42	1.58	8.52	1.60	8.63	1.61	8.89	1.65	9.20	1.68
						14	6.01	1.54	8.03	1.58	8.21	1.62	8.32	1.63	8.44	1.65	8.71	1.68	9.02	1.72
						16	6.01	1.58	7.81	1.62	8.01	1.65	8.12	1.67	8.25	1.69	8.53	1.72	8.86	1.75
						18	6.01	1.62	7.61	1.66	7.82	1.69	7.94	1.71	8.07	1.73	8.36	1.76	8.70	1.79
						20	6.01	1.66	7.42	1.70	7.64	1.74	7.76	1.75	7.90	1.77	8.21	1.80	8.56	1.83
						21	6.01	1.68	7.33	1.72	7.55	1.76	7.68	1.77	7.82	1.79	8.13	1.82	8.49	1.85
						23	6.01	1.73	7.15	1.76	7.38	1.80	7.52	1.82	7.66	1.83	7.99	1.87	8.35	1.90
						25	6.01	1.77	6.98	1.81	7.23	1.84	7.37	1.86	7.52	1.88	7.85	1.91	8.23	1.94
2500	5000			7500	110%	27	6.01	1.82	6.82	1.85	7.08	1.89	7.22	1.90	7.38	1.92	7.73	1.95	8.12	1.98
						29	6.01	1.86	6.67	1.90	6.94	1.93	7.09	1.95	7.25	1.97	7.61	2.00	8.02	2.03
						31	6.01	1.91	6.53	1.95	6.81	1.98	6.97	2.00	7.14	2.01	7.51	2.05	7.92	2.08
						33	6.01	1.96	6.40	1.99	6.69	2.03	6.85	2.05	7.03	2.06	7.41	2.09	7.84	2.12
						35	6.01	2.01	6.27	2.04	6.58	2.08	6.80	2.09	6.93	2.11	7.32	2.14	7.76	2.17
						37	6.01	2.06	6.16	2.09	6.48	2.13	6.66	2.15	6.84	2.16	7.25	2.19	7.70	2.22
						39	6.01	2.11	6.06	2.15	6.39	2.18	6.57	2.20	6.76	2.21	7.18	2.24	7.64	2.27
						42	6.01	2.19	5.92	2.23	6.27	2.26	6.46	2.28	6.66	2.29	7.10	2.32	7.57	2.35
						44	6.01	2.25	5.84	2.28	6.20	2.31	6.40	2.33	6.60	2.35	7.05	2.38	7.54	2.41
						46	6.01	2.30	5.77	2.34	6.14	2.37	6.35	2.39	6.56	2.40	7.02	2.43	7.52	2.46
						10	5.74	1.41	8.10	1.45	8.26	1.48	8.35	1.50	8.45	1.52	8.69	1.55	8.97	1.58
						12	5.74	1.45	7.88	1.48	8.05	1.52	8.15	1.53	8.25	1.55	8.50	1.58	8.79	1.61
						14	5.74	1.48	7.67	1.52	7.85	1.55	7.95	1.57	8.06	1.59	8.32	1.62	8.62	1.65
						16	5.74	1.52	7.47	1.56	7.66	1.59	7.76	1.61	7.88	1.62	8.15	1.66	8.47	1.69
						18	5.74	1.56	7.28	1.60	7.47	1.63	7.59	1.65	7.71	1.66	7.99	1.69	8.32	1.72
						20	5.74	1.60	7.09	1.64	7.30	1.67	7.42	1.69	7.55	1.70	7.84	1.73	8.18	1.76
						21	5.74	1.62	7.00	1.66	7.22	1.69	7.34	1.71	7.47	1.72	7.77	1.75	8.11	1.78
						23	5.74	1.66	6.83	1.70	7.06	1.73	7.19	1.75	7.33	1.76	7.63	1.79	7.99	1.82
						25	5.74	1.70	6.67	1.74	6.91	1.77	7.04	1.79	7.19	1.80	7.51	1.84	7.87	1.87
3500	3500			7000	103%	27	5.74	1.75	6.52	1.78	6.77	1.82	6.91	1.83	7.06	1.85	7.39	1.88	7.76	1.91
						29	5.74	1.79	6.37	1.83	6.63	1.86	6.78	1.88	6.93	1.89	7.28	1.92	7.66	1.95
						31	5.74	1.84	6.24	1.87	6.51	1.91	6.66	1.92	6.82	1.94	7.18	1.97	7.57	2.00
						33	5.74	1.88	6.11	1.92	6.40	1.95	6.55	1.97	6.72	1.98	7.08	2.01	7.49	2.04
						35	5.74	1.93	6.00	1.97	6.29	2.00	6.50	2.01	6.63	2.03	7.00	2.06	7.42	2.09
						37	5.74	1.98	5.89	2.01	6.19	2.05	6.36	2.06	6.54	2.08	6.93	2.11	7.36	2.14
						39	5.74	2.03	5.79	2.06	6.11	2.10	6.28	2.11	6.46	2.13	6.86	2.16	7.30	2.19
						42	5.74	2.11	5.66	2.14	5.99	2.17	6.17	2.19	6.37	2.20	6.78	2.23	7.24	2.26
						44	5.74	2.16	5.58	2.19	5.93	2.23	6.12	2.24	6.31	2.26	6.74	2.29	7.21	2.32
						46	5.74	2.21	5.52	2.25	5.87	2.28	6.07	2.29	6.27	2.31	6.71	2.34	7.19	2.37

12. Capacity Table

12-3. AJ068TXJ3KH/EA

COOLING

Combination (Capacity Index)				Combination (Total)	Combination (%)	Outdoor Temperature (°C,DB)	Indoor Temperature (°C, WB)													
							14		16		18		19		20		22		24	
							TC(kW)	PI(kW)	TC(kW)	PI(kW)	TC(kW)	PI(kW)	TC(kW)	PI(kW)	TC(kW)	PI(kW)	TC(kW)	PI(kW)	TC(kW)	PI(kW)
3500	5000			8500	125%	10	6.01	1.48	8.48	1.51	8.64	1.55	8.73	1.57	8.84	1.58	9.09	1.62	9.38	1.65
						12	6.01	1.51	8.25	1.55	8.42	1.59	8.52	1.60	8.63	1.62	8.89	1.65	9.20	1.69
						14	6.01	1.55	8.03	1.59	8.21	1.62	8.32	1.64	8.44	1.66	8.71	1.69	9.02	1.72
						16	6.01	1.59	7.81	1.63	8.01	1.66	8.12	1.68	8.25	1.70	8.53	1.73	8.86	1.76
						18	6.01	1.63	7.61	1.67	7.82	1.70	7.94	1.72	8.07	1.74	8.36	1.77	8.70	1.80
						20	6.01	1.67	7.42	1.71	7.64	1.74	7.76	1.76	7.90	1.78	8.21	1.81	8.56	1.84
						21	6.01	1.69	7.33	1.73	7.55	1.76	7.68	1.78	7.82	1.80	8.13	1.83	8.49	1.86
						23	6.01	1.74	7.15	1.77	7.38	1.81	7.52	1.82	7.66	1.84	7.99	1.87	8.35	1.91
						25	6.01	1.78	6.98	1.82	7.23	1.85	7.37	1.87	7.52	1.89	7.85	1.92	8.23	1.95
						27	6.01	1.83	6.82	1.86	7.08	1.90	7.22	1.91	7.38	1.93	7.73	1.96	8.12	1.99
						29	6.01	1.87	6.67	1.91	6.94	1.94	7.09	1.96	7.25	1.98	7.61	2.01	8.02	2.04
						31	6.01	1.92	6.53	1.96	6.81	1.99	6.97	2.01	7.14	2.02	7.51	2.06	7.92	2.09
						33	6.01	1.97	6.40	2.00	6.69	2.04	6.85	2.06	7.03	2.07	7.41	2.10	7.84	2.13
						35	6.01	2.02	6.27	2.05	6.58	2.09	6.80	2.10	6.93	2.12	7.32	2.15	7.76	2.18
						37	6.01	2.07	6.16	2.10	6.48	2.14	6.66	2.16	6.84	2.17	7.25	2.20	7.70	2.23
						39	6.01	2.12	6.06	2.16	6.39	2.19	6.57	2.21	6.76	2.22	7.18	2.26	7.64	2.29
						42	6.01	2.20	5.92	2.24	6.27	2.27	6.46	2.29	6.66	2.30	7.10	2.33	7.57	2.36
						44	6.01	2.26	5.84	2.29	6.20	2.33	6.40	2.34	6.60	2.36	7.05	2.39	7.54	2.42
						46	6.01	2.31	5.77	2.35	6.14	2.38	6.35	2.40	6.56	2.41	7.02	2.44	7.52	2.47
5000	5000			10000	147%	10	7.65	1.45	7.95	1.48	8.25	1.51	8.41	1.52	8.56	1.54	8.87	1.57	9.19	1.60
						12	7.51	1.48	7.81	1.52	8.12	1.55	8.27	1.56	8.43	1.58	8.74	1.61	9.06	1.64
						14	7.38	1.52	7.68	1.55	7.99	1.59	8.14	1.60	8.30	1.62	8.61	1.65	8.93	1.68
						16	7.25	1.56	7.55	1.60	7.86	1.63	8.01	1.64	8.17	1.66	8.48	1.69	8.80	1.72
						18	7.12	1.60	7.42	1.64	7.73	1.67	7.88	1.68	8.04	1.70	8.35	1.73	8.68	1.76
						20	6.99	1.65	7.29	1.68	7.60	1.71	7.75	1.73	7.91	1.74	8.23	1.77	8.55	1.81
						21	6.92	1.67	7.22	1.70	7.53	1.73	7.69	1.75	7.84	1.76	8.16	1.79	8.48	1.83
						23	6.79	1.71	7.09	1.74	7.40	1.77	7.56	1.79	7.71	1.81	8.03	1.84	8.35	1.87
						25	6.66	1.75	6.96	1.79	7.27	1.82	7.43	1.83	7.59	1.85	7.90	1.88	8.23	1.92
						27	6.53	1.80	6.83	1.83	7.14	1.86	7.30	1.88	7.46	1.90	7.78	1.93	8.10	1.96
						29	6.40	1.84	6.70	1.87	7.01	1.91	7.17	1.92	7.33	1.94	7.65	1.97	7.97	2.01
						31	6.27	1.89	6.57	1.92	6.89	1.95	7.04	1.97	7.20	1.99	7.52	2.02	7.85	2.05
						33	6.14	1.93	6.45	1.97	6.76	2.00	6.92	2.02	7.07	2.03	7.39	2.07	7.72	2.10
						35	6.01	1.98	6.32	2.01	6.63	2.05	6.80	2.06	6.95	2.08	7.27	2.11	7.59	2.15
						37	5.88	2.03	6.19	2.06	6.50	2.10	6.66	2.11	6.82	2.13	7.14	2.16	7.47	2.20
						39	5.75	2.08	6.06	2.11	6.38	2.14	6.53	2.16	6.69	2.18	7.02	2.21	7.34	2.25
						42	5.56	2.15	5.87	2.19	6.19	2.22	6.34	2.24	6.50	2.25	6.83	2.29	7.15	2.32
						44	5.43	2.20	5.74	2.24	6.06	2.27	6.22	2.29	6.38	2.30	6.70	2.34	7.03	2.37
						46	5.31	2.25	5.62	2.29	5.93	2.32	6.09	2.34	6.25	2.36	6.58	2.39	6.91	2.42

12. Capacity Table

12-3. AJ068TXJ3KH/EA

COOLING

Combination (Capacity Index)				Combination (Total)	Combination (%)	Outdoor Temperature (°C,DB)	Indoor Temperature (°C, WB)													
							14		16		18		19		20		22		24	
							TC(kW)	PI(kW)	TC(kW)	PI(kW)	TC(kW)	PI(kW)	TC(kW)	PI(kW)	TC(kW)	PI(kW)	TC(kW)	PI(kW)	TC(kW)	PI(kW)
2000	2000	2000		6000	88%	10	5.30	1.38	7.48	1.42	7.62	1.45	7.71	1.47	7.80	1.49	8.02	1.52	8.28	1.55
						12	5.30	1.42	7.28	1.45	7.43	1.49	7.52	1.50	7.62	1.52	7.85	1.55	8.11	1.58
						14	5.30	1.45	7.08	1.49	7.24	1.52	7.34	1.54	7.44	1.56	7.68	1.59	7.96	1.62
						16	5.30	1.49	6.89	1.53	7.07	1.56	7.17	1.58	7.28	1.59	7.53	1.62	7.81	1.65
						18	5.30	1.53	6.72	1.56	6.90	1.60	7.00	1.61	7.12	1.63	7.38	1.66	7.68	1.69
						20	5.30	1.57	6.55	1.60	6.74	1.64	6.85	1.65	6.97	1.67	7.24	1.70	7.55	1.73
						21	5.30	1.59	6.46	1.62	6.66	1.66	6.78	1.67	6.90	1.69	7.17	1.72	7.49	1.75
						23	5.30	1.63	6.31	1.66	6.51	1.70	6.63	1.71	6.76	1.73	7.05	1.76	7.37	1.79
						25	5.30	1.67	6.16	1.70	6.38	1.74	6.50	1.75	6.63	1.77	6.93	1.80	7.26	1.83
						27	5.30	1.71	6.02	1.75	6.25	1.78	6.37	1.80	6.51	1.81	6.82	1.84	7.16	1.87
						29	5.30	1.76	5.88	1.79	6.12	1.82	6.26	1.84	6.40	1.85	6.72	1.88	7.07	1.91
						31	5.30	1.80	5.76	1.83	6.01	1.87	6.15	1.88	6.30	1.90	6.62	1.93	6.99	1.96
						33	5.30	1.85	5.64	1.88	5.90	1.91	6.05	1.93	6.20	1.94	6.54	1.97	6.92	2.00
						35	5.30	1.89	5.54	1.93	5.81	1.96	6.00	1.97	6.12	1.99	6.46	2.02	6.85	2.05
						37	5.30	1.94	5.44	1.97	5.72	2.01	5.87	2.02	6.04	2.04	6.39	2.07	6.79	2.10
						39	5.30	1.99	5.34	2.02	5.64	2.06	5.80	2.07	5.97	2.09	6.34	2.12	6.74	2.14
						42	5.30	2.07	5.22	2.10	5.53	2.13	5.70	2.15	5.88	2.16	6.26	2.19	6.68	2.22
						44	5.30	2.12	5.15	2.15	5.47	2.18	5.64	2.20	5.83	2.21	6.22	2.24	6.65	2.27
						46	5.30	2.17	5.09	2.20	5.42	2.23	5.60	2.25	5.79	2.26	6.19	2.29	6.63	2.32
2000	2000	2500		6500	96%	10	5.74	1.41	8.10	1.44	8.26	1.47	8.35	1.49	8.45	1.51	8.69	1.54	8.97	1.57
						12	5.74	1.44	7.88	1.48	8.05	1.51	8.15	1.53	8.25	1.54	8.50	1.57	8.79	1.61
						14	5.74	1.48	7.67	1.51	7.85	1.55	7.95	1.56	8.06	1.58	8.32	1.61	8.62	1.64
						16	5.74	1.51	7.47	1.55	7.66	1.58	7.76	1.60	7.88	1.62	8.15	1.65	8.47	1.68
						18	5.74	1.55	7.28	1.59	7.47	1.62	7.59	1.64	7.71	1.65	7.99	1.69	8.32	1.72
						20	5.74	1.59	7.09	1.63	7.30	1.66	7.42	1.68	7.55	1.69	7.84	1.72	8.18	1.75
						21	5.74	1.61	7.00	1.65	7.22	1.68	7.34	1.70	7.47	1.71	7.77	1.74	8.11	1.77
						23	5.74	1.65	6.83	1.69	7.06	1.72	7.19	1.74	7.33	1.75	7.63	1.78	7.99	1.81
						25	5.74	1.70	6.67	1.73	6.91	1.76	7.04	1.78	7.19	1.80	7.51	1.83	7.87	1.86
						27	5.74	1.74	6.52	1.77	6.77	1.81	6.91	1.82	7.06	1.84	7.39	1.87	7.76	1.90
						29	5.74	1.78	6.37	1.82	6.63	1.85	6.78	1.87	6.93	1.88	7.28	1.91	7.66	1.94
						31	5.74	1.83	6.24	1.86	6.51	1.90	6.66	1.91	6.82	1.93	7.18	1.96	7.57	1.99
						33	5.74	1.87	6.11	1.91	6.40	1.94	6.55	1.96	6.72	1.97	7.08	2.00	7.49	2.03
						35	5.74	1.92	6.00	1.96	6.29	1.99	6.50	2.00	6.63	2.02	7.00	2.05	7.42	2.08
						37	5.74	1.97	5.89	2.00	6.19	2.04	6.36	2.05	6.54	2.07	6.93	2.10	7.36	2.13
						39	5.74	2.02	5.79	2.05	6.11	2.09	6.28	2.10	6.46	2.12	6.86	2.15	7.30	2.18
						42	5.74	2.10	5.66	2.13	5.99	2.16	6.17	2.18	6.37	2.19	6.78	2.22	7.24	2.25
						44	5.74	2.15	5.58	2.18	5.93	2.21	6.12	2.23	6.31	2.25	6.74	2.28	7.21	2.30
						46	5.74	2.20	5.52	2.24	5.87	2.27	6.07	2.28	6.27	2.30	6.71	2.33	7.19	2.36

12. Capacity Table

12-3. AJ068TXJ3KH/EA

COOLING

Combination (Capacity Index)				Combination (Total)	Combination (%)	Outdoor Temperature (°C,DB)	Indoor Temperature (°C, WB)													
							14		16		18		19		20		22		24	
							TC(kW)	PI(kW)	TC(kW)	PI(kW)	TC(kW)	PI(kW)	TC(kW)	PI(kW)	TC(kW)	PI(kW)	TC(kW)	PI(kW)	TC(kW)	PI(kW)
2000	2000	3500		7500	110%	10	6.01	1.45	8.48	1.49	8.64	1.53	8.73	1.54	8.84	1.56	9.09	1.59	9.38	1.63
						12	6.01	1.49	8.25	1.53	8.42	1.56	8.52	1.58	8.63	1.60	8.89	1.63	9.20	1.66
						14	6.01	1.53	8.03	1.56	8.21	1.60	8.32	1.62	8.44	1.63	8.71	1.67	9.02	1.70
						16	6.01	1.57	7.81	1.60	8.01	1.64	8.12	1.66	8.25	1.67	8.53	1.71	8.86	1.74
						18	6.01	1.61	7.61	1.64	7.82	1.68	7.94	1.70	8.07	1.71	8.36	1.74	8.70	1.78
						20	6.01	1.65	7.42	1.68	7.64	1.72	7.76	1.74	7.90	1.75	8.21	1.78	8.56	1.82
						21	6.01	1.67	7.33	1.70	7.55	1.74	7.68	1.76	7.82	1.77	8.13	1.81	8.49	1.84
						23	6.01	1.71	7.15	1.75	7.38	1.78	7.52	1.80	7.66	1.82	7.99	1.85	8.35	1.88
						25	6.01	1.75	6.98	1.79	7.23	1.83	7.37	1.84	7.52	1.86	7.85	1.89	8.23	1.92
						27	6.01	1.80	6.82	1.84	7.08	1.87	7.22	1.89	7.38	1.90	7.73	1.93	8.12	1.97
						29	6.01	1.85	6.67	1.88	6.94	1.92	7.09	1.93	7.25	1.95	7.61	1.98	8.02	2.01
						31	6.01	1.89	6.53	1.93	6.81	1.96	6.97	1.98	7.14	1.99	7.51	2.03	7.92	2.06
						33	6.01	1.94	6.40	1.98	6.69	2.01	6.85	2.03	7.03	2.04	7.41	2.07	7.84	2.10
						35	6.01	1.99	6.27	2.02	6.58	2.06	6.80	2.07	6.93	2.09	7.32	2.12	7.76	2.15
						37	6.01	2.04	6.16	2.07	6.48	2.11	6.66	2.12	6.84	2.14	7.25	2.17	7.70	2.20
						39	6.01	2.09	6.06	2.13	6.39	2.16	6.57	2.18	6.76	2.19	7.18	2.22	7.64	2.25
						42	6.01	2.17	5.92	2.21	6.27	2.24	6.46	2.25	6.66	2.27	7.10	2.30	7.57	2.33
						44	6.01	2.22	5.84	2.26	6.20	2.29	6.40	2.31	6.60	2.32	7.05	2.35	7.54	2.38
						46	6.01	2.28	5.77	2.31	6.14	2.35	6.35	2.36	6.56	2.38	7.02	2.41	7.52	2.44
2000	2000	5000		9000	132%	10	7.65	1.40	7.95	1.43	8.25	1.46	8.41	1.48	8.56	1.49	8.87	1.52	9.19	1.55
						12	7.51	1.44	7.81	1.47	8.12	1.50	8.27	1.52	8.43	1.53	8.74	1.56	9.06	1.59
						14	7.38	1.48	7.68	1.51	7.99	1.54	8.14	1.55	8.30	1.57	8.61	1.60	8.93	1.63
						16	7.25	1.52	7.55	1.55	7.86	1.58	8.01	1.59	8.17	1.61	8.48	1.64	8.80	1.67
						18	7.12	1.56	7.42	1.59	7.73	1.62	7.88	1.63	8.04	1.65	8.35	1.68	8.68	1.71
						20	6.99	1.60	7.29	1.63	7.60	1.66	7.75	1.68	7.91	1.69	8.23	1.72	8.55	1.75
						21	6.92	1.62	7.22	1.65	7.53	1.68	7.69	1.70	7.84	1.71	8.16	1.74	8.48	1.77
						23	6.79	1.66	7.09	1.69	7.40	1.72	7.56	1.74	7.71	1.75	8.03	1.78	8.35	1.82
						25	6.66	1.70	6.96	1.73	7.27	1.76	7.43	1.78	7.59	1.80	7.90	1.83	8.23	1.86
						27	6.53	1.74	6.83	1.78	7.14	1.81	7.30	1.82	7.46	1.84	7.78	1.87	8.10	1.90
						29	6.40	1.79	6.70	1.82	7.01	1.85	7.17	1.87	7.33	1.88	7.65	1.92	7.97	1.95
						31	6.27	1.83	6.57	1.86	6.89	1.90	7.04	1.91	7.20	1.93	7.52	1.96	7.85	1.99
						33	6.14	1.88	6.45	1.91	6.76	1.94	6.92	1.96	7.07	1.97	7.39	2.01	7.72	2.04
						35	6.01	1.92	6.32	1.96	6.63	1.99	6.80	2.00	6.95	2.02	7.27	2.05	7.59	2.09
						37	5.88	1.97	6.19	2.00	6.50	2.03	6.66	2.05	6.82	2.07	7.14	2.10	7.47	2.13
						39	5.75	2.02	6.06	2.05	6.38	2.08	6.53	2.10	6.69	2.12	7.02	2.15	7.34	2.18
						42	5.56	2.09	5.87	2.12	6.19	2.15	6.34	2.17	6.50	2.19	6.83	2.22	7.15	2.25
						44	5.43	2.14	5.74	2.17	6.06	2.20	6.22	2.22	6.38	2.24	6.70	2.27	7.03	2.30
						46	5.31	2.19	5.62	2.22	5.93	2.25	6.09	2.27	6.25	2.29	6.58	2.32	6.91	2.35

12. Capacity Table

12-3. AJ068TXJ3KH/EA

COOLING

Combination (Capacity Index)				Combination (Total)	Combination (%)	Outdoor Temperature (°C,DB)	Indoor Temperature (°C, WB)													
							14		16		18		19		20		22		24	
							TC(kW)	PI(kW)	TC(kW)	PI(kW)	TC(kW)	PI(kW)	TC(kW)	PI(kW)	TC(kW)	PI(kW)	TC(kW)	PI(kW)	TC(kW)	PI(kW)
2000	2500	2500		7000	103%	10	5.74	1.43	8.10	1.46	8.26	1.50	8.35	1.51	8.45	1.53	8.69	1.56	8.97	1.59
						12	5.74	1.46	7.88	1.50	8.05	1.53	8.15	1.55	8.25	1.57	8.50	1.60	8.79	1.63
						14	5.74	1.50	7.67	1.53	7.85	1.57	7.95	1.59	8.06	1.60	8.32	1.63	8.62	1.67
						16	5.74	1.54	7.47	1.57	7.66	1.61	7.76	1.62	7.88	1.64	8.15	1.67	8.47	1.70
						18	5.74	1.58	7.28	1.61	7.47	1.65	7.59	1.66	7.71	1.68	7.99	1.71	8.32	1.74
						20	5.74	1.62	7.09	1.65	7.30	1.69	7.42	1.70	7.55	1.72	7.84	1.75	8.18	1.78
						21	5.74	1.64	7.00	1.67	7.22	1.71	7.34	1.72	7.47	1.74	7.77	1.77	8.11	1.80
						23	5.74	1.68	6.83	1.71	7.06	1.75	7.19	1.76	7.33	1.78	7.63	1.81	7.99	1.84
						25	5.74	1.72	6.67	1.76	6.91	1.79	7.04	1.81	7.19	1.82	7.51	1.85	7.87	1.88
						27	5.74	1.76	6.52	1.80	6.77	1.83	6.91	1.85	7.06	1.87	7.39	1.90	7.76	1.93
						29	5.74	1.81	6.37	1.84	6.63	1.88	6.78	1.89	6.93	1.91	7.28	1.94	7.66	1.97
						31	5.74	1.86	6.24	1.89	6.51	1.92	6.66	1.94	6.82	1.96	7.18	1.99	7.57	2.02
						33	5.74	1.90	6.11	1.94	6.40	1.97	6.55	1.99	6.72	2.00	7.08	2.03	7.49	2.06
						35	5.74	1.95	6.00	1.99	6.29	2.02	6.50	2.03	6.63	2.05	7.00	2.08	7.42	2.11
						37	5.74	2.00	5.89	2.03	6.19	2.07	6.36	2.08	6.54	2.10	6.93	2.13	7.36	2.16
						39	5.74	2.05	5.79	2.09	6.11	2.12	6.28	2.13	6.46	2.15	6.86	2.18	7.30	2.21
						42	5.74	2.13	5.66	2.16	5.99	2.20	6.17	2.21	6.37	2.23	6.78	2.26	7.24	2.29
						44	5.74	2.18	5.58	2.22	5.93	2.25	6.12	2.26	6.31	2.28	6.74	2.31	7.21	2.34
						46	5.74	2.24	5.52	2.27	5.87	2.30	6.07	2.32	6.27	2.33	6.71	2.36	7.19	2.39
2000	2500	3500		8000	118%	10	7.65	1.47	7.95	1.50	8.25	1.53	8.41	1.54	8.56	1.56	8.87	1.59	9.19	1.62
						12	7.51	1.51	7.81	1.54	8.12	1.57	8.27	1.58	8.43	1.60	8.74	1.63	9.06	1.66
						14	7.38	1.55	7.68	1.58	7.99	1.61	8.14	1.62	8.30	1.64	8.61	1.67	8.93	1.70
						16	7.25	1.59	7.55	1.62	7.86	1.65	8.01	1.67	8.17	1.68	8.48	1.71	8.80	1.75
						18	7.12	1.63	7.42	1.66	7.73	1.69	7.88	1.71	8.04	1.72	8.35	1.76	8.68	1.79
						20	6.99	1.67	7.29	1.70	7.60	1.73	7.75	1.75	7.91	1.77	8.23	1.80	8.55	1.83
						21	6.92	1.69	7.22	1.72	7.53	1.76	7.69	1.77	7.84	1.79	8.16	1.82	8.48	1.85
						23	6.79	1.73	7.09	1.77	7.40	1.80	7.56	1.82	7.71	1.83	8.03	1.87	8.35	1.90
						25	6.66	1.78	6.96	1.81	7.27	1.84	7.43	1.86	7.59	1.88	7.90	1.91	8.23	1.94
						27	6.53	1.82	6.83	1.86	7.14	1.89	7.30	1.91	7.46	1.92	7.78	1.96	8.10	1.99
						29	6.40	1.87	6.70	1.90	7.01	1.94	7.17	1.95	7.33	1.97	7.65	2.00	7.97	2.04
						31	6.27	1.92	6.57	1.95	6.89	1.98	7.04	2.00	7.20	2.02	7.52	2.05	7.85	2.08
						33	6.14	1.96	6.45	2.00	6.76	2.03	6.92	2.05	7.07	2.06	7.39	2.10	7.72	2.13
						35	6.01	2.01	6.32	2.04	6.63	2.08	6.80	2.09	6.95	2.11	7.27	2.15	7.59	2.18
						37	5.88	2.06	6.19	2.09	6.50	2.13	6.66	2.14	6.82	2.16	7.14	2.19	7.47	2.23
						39	5.75	2.11	6.06	2.14	6.38	2.18	6.53	2.19	6.69	2.21	7.02	2.24	7.34	2.28
						42	5.56	2.18	5.87	2.22	6.19	2.25	6.34	2.27	6.50	2.29	6.83	2.32	7.15	2.36
						44	5.43	2.23	5.74	2.27	6.06	2.30	6.22	2.32	6.38	2.34	6.70	2.37	7.03	2.41
						46	5.31	2.29	5.62	2.32	5.93	2.36	6.09	2.37	6.25	2.39	6.58	2.43	6.91	2.46

12. Capacity Table

12-3. AJ068TXJ3KH/EA

COOLING

Combination (Capacity Index)				Combination (Total)	Combination (%)	Outdoor Temperature (°C,DB)	Indoor Temperature (°C, WB)													
							14		16		18		19		20		22		24	
							TC(kW)	PI(kW)	TC(kW)	PI(kW)	TC(kW)	PI(kW)	TC(kW)	PI(kW)	TC(kW)	PI(kW)	TC(kW)	PI(kW)	TC(kW)	PI(kW)
2000	2500	5000		9500	140%	10	7.65	1.41	7.95	1.44	8.25	1.47	8.41	1.49	8.56	1.50	8.87	1.53	9.19	1.56
						12	7.51	1.45	7.81	1.48	8.12	1.51	8.27	1.52	8.43	1.54	8.74	1.57	9.06	1.60
						14	7.38	1.49	7.68	1.52	7.99	1.55	8.14	1.56	8.30	1.58	8.61	1.61	8.93	1.64
						16	7.25	1.53	7.55	1.56	7.86	1.59	8.01	1.60	8.17	1.62	8.48	1.65	8.80	1.68
						18	7.12	1.57	7.42	1.60	7.73	1.63	7.88	1.64	8.04	1.66	8.35	1.69	8.68	1.72
						20	6.99	1.61	7.29	1.64	7.60	1.67	7.75	1.68	7.91	1.70	8.23	1.73	8.55	1.76
						21	6.92	1.63	7.22	1.66	7.53	1.69	7.69	1.70	7.84	1.72	8.16	1.75	8.48	1.78
						23	6.79	1.67	7.09	1.70	7.40	1.73	7.56	1.75	7.71	1.76	8.03	1.79	8.35	1.83
						25	6.66	1.71	6.96	1.74	7.27	1.77	7.43	1.79	7.59	1.81	7.90	1.84	8.23	1.87
						27	6.53	1.75	6.83	1.79	7.14	1.82	7.30	1.83	7.46	1.85	7.78	1.88	8.10	1.91
						29	6.40	1.80	6.70	1.83	7.01	1.86	7.17	1.88	7.33	1.89	7.65	1.93	7.97	1.96
						31	6.27	1.84	6.57	1.87	6.89	1.91	7.04	1.92	7.20	1.94	7.52	1.97	7.85	2.00
						33	6.14	1.89	6.45	1.92	6.76	1.95	6.92	1.97	7.07	1.98	7.39	2.02	7.72	2.05
						35	6.01	1.93	6.32	1.97	6.63	2.00	6.80	2.01	6.95	2.03	7.27	2.06	7.59	2.10
						37	5.88	1.98	6.19	2.01	6.50	2.04	6.66	2.06	6.82	2.08	7.14	2.11	7.47	2.14
						39	5.75	2.03	6.06	2.06	6.38	2.09	6.53	2.11	6.69	2.13	7.02	2.16	7.34	2.19
						42	5.56	2.10	5.87	2.13	6.19	2.17	6.34	2.18	6.50	2.20	6.83	2.23	7.15	2.27
						44	5.43	2.15	5.74	2.18	6.06	2.21	6.22	2.23	6.38	2.25	6.70	2.28	7.03	2.32
						46	5.31	2.20	5.62	2.23	5.93	2.26	6.09	2.28	6.25	2.30	6.58	2.33	6.91	2.37
2000	3500	3500		9000	132%	10	7.65	1.41	7.95	1.44	8.25	1.47	8.41	1.49	8.56	1.50	8.87	1.53	9.19	1.56
						12	7.51	1.45	7.81	1.48	8.12	1.51	8.27	1.52	8.43	1.54	8.74	1.57	9.06	1.60
						14	7.38	1.49	7.68	1.52	7.99	1.55	8.14	1.56	8.30	1.58	8.61	1.61	8.93	1.64
						16	7.25	1.53	7.55	1.56	7.86	1.59	8.01	1.60	8.17	1.62	8.48	1.65	8.80	1.68
						18	7.12	1.57	7.42	1.60	7.73	1.63	7.88	1.64	8.04	1.66	8.35	1.69	8.68	1.72
						20	6.99	1.61	7.29	1.64	7.60	1.67	7.75	1.68	7.91	1.70	8.23	1.73	8.55	1.76
						21	6.92	1.63	7.22	1.66	7.53	1.69	7.69	1.70	7.84	1.72	8.16	1.75	8.48	1.78
						23	6.79	1.67	7.09	1.70	7.40	1.73	7.56	1.75	7.71	1.76	8.03	1.79	8.35	1.83
						25	6.66	1.71	6.96	1.74	7.27	1.77	7.43	1.79	7.59	1.81	7.90	1.84	8.23	1.87
						27	6.53	1.75	6.83	1.79	7.14	1.82	7.30	1.83	7.46	1.85	7.78	1.88	8.10	1.91
						29	6.40	1.80	6.70	1.83	7.01	1.86	7.17	1.88	7.33	1.89	7.65	1.93	7.97	1.96
						31	6.27	1.84	6.57	1.87	6.89	1.91	7.04	1.92	7.20	1.94	7.52	1.97	7.85	2.00
						33	6.14	1.89	6.45	1.92	6.76	1.95	6.92	1.97	7.07	1.98	7.39	2.02	7.72	2.05
						35	6.01	1.93	6.32	1.97	6.63	2.00	6.80	2.01	6.95	2.03	7.27	2.06	7.59	2.10
						37	5.88	1.98	6.19	2.01	6.50	2.04	6.66	2.06	6.82	2.08	7.14	2.11	7.47	2.14
						39	5.75	2.03	6.06	2.06	6.38	2.09	6.53	2.11	6.69	2.13	7.02	2.16	7.34	2.19
						42	5.56	2.10	5.87	2.13	6.19	2.17	6.34	2.18	6.50	2.20	6.83	2.23	7.15	2.27
						44	5.43	2.15	5.74	2.18	6.06	2.21	6.22	2.23	6.38	2.25	6.70	2.28	7.03	2.32
						46	5.31	2.20	5.62	2.23	5.93	2.26	6.09	2.28	6.25	2.30	6.58	2.33	6.91	2.37

12. Capacity Table

12-3. AJ068TXJ3KH/EA

COOLING

Combination (Capacity Index)				Combination (Total)	Combination (%)	Outdoor Temperature (°C,DB)	Indoor Temperature (°C, WB)													
							14		16		18		19		20		22		24	
							TC(kW)	PI(kW)	TC(kW)	PI(kW)	TC(kW)	PI(kW)	TC(kW)	PI(kW)	TC(kW)	PI(kW)	TC(kW)	PI(kW)	TC(kW)	PI(kW)
						10	7.65	1.44	7.95	1.47	8.25	1.50	8.41	1.52	8.56	1.53	8.87	1.56	9.19	1.59
						12	7.51	1.48	7.81	1.51	8.12	1.54	8.27	1.55	8.43	1.57	8.74	1.60	9.06	1.63
						14	7.38	1.52	7.68	1.55	7.99	1.58	8.14	1.59	8.30	1.61	8.61	1.64	8.93	1.67
						16	7.25	1.56	7.55	1.59	7.86	1.62	8.01	1.63	8.17	1.65	8.48	1.68	8.80	1.71
						18	7.12	1.60	7.42	1.63	7.73	1.66	7.88	1.68	8.04	1.69	8.35	1.72	8.68	1.75
						20	6.99	1.64	7.29	1.67	7.60	1.70	7.75	1.72	7.91	1.73	8.23	1.76	8.55	1.80
						21	6.92	1.66	7.22	1.69	7.53	1.72	7.69	1.74	7.84	1.75	8.16	1.79	8.48	1.82
						23	6.79	1.70	7.09	1.73	7.40	1.77	7.56	1.78	7.71	1.80	8.03	1.83	8.35	1.86
						25	6.66	1.74	6.96	1.78	7.27	1.81	7.43	1.83	7.59	1.84	7.90	1.87	8.23	1.91
2000	3500	5000		10500	154%	27	6.53	1.79	6.83	1.82	7.14	1.85	7.30	1.87	7.46	1.89	7.78	1.92	8.10	1.95
						29	6.40	1.83	6.70	1.87	7.01	1.90	7.17	1.91	7.33	1.93	7.65	1.96	7.97	2.00
						31	6.27	1.88	6.57	1.91	6.89	1.94	7.04	1.96	7.20	1.98	7.52	2.01	7.85	2.04
						33	6.14	1.92	6.45	1.96	6.76	1.99	6.92	2.01	7.07	2.02	7.39	2.06	7.72	2.09
						35	6.01	1.97	6.32	2.00	6.63	2.04	6.80	2.05	6.95	2.07	7.27	2.10	7.59	2.14
						37	5.88	2.02	6.19	2.05	6.50	2.09	6.66	2.10	6.82	2.12	7.14	2.15	7.47	2.19
						39	5.75	2.07	6.06	2.10	6.38	2.13	6.53	2.15	6.69	2.17	7.02	2.20	7.34	2.24
						42	5.56	2.14	5.87	2.17	6.19	2.21	6.34	2.23	6.50	2.24	6.83	2.28	7.15	2.31
						44	5.43	2.19	5.74	2.22	6.06	2.26	6.22	2.28	6.38	2.29	6.70	2.33	7.03	2.36
						46	5.31	2.24	5.62	2.28	5.93	2.31	6.09	2.33	6.25	2.34	6.58	2.38	6.91	2.41
						10	7.65	1.45	7.95	1.48	8.25	1.51	8.41	1.52	8.56	1.54	8.87	1.57	9.19	1.60
						12	7.51	1.48	7.81	1.52	8.12	1.55	8.27	1.56	8.43	1.58	8.74	1.61	9.06	1.64
						14	7.38	1.52	7.68	1.55	7.99	1.59	8.14	1.60	8.30	1.62	8.61	1.65	8.93	1.68
						16	7.25	1.56	7.55	1.60	7.86	1.63	8.01	1.64	8.17	1.66	8.48	1.69	8.80	1.72
						18	7.12	1.60	7.42	1.64	7.73	1.67	7.88	1.68	8.04	1.70	8.35	1.73	8.68	1.76
						20	6.99	1.65	7.29	1.68	7.60	1.71	7.75	1.73	7.91	1.74	8.23	1.77	8.55	1.81
						21	6.92	1.67	7.22	1.70	7.53	1.73	7.69	1.75	7.84	1.76	8.16	1.79	8.48	1.83
						23	6.79	1.71	7.09	1.74	7.40	1.77	7.56	1.79	7.71	1.81	8.03	1.84	8.35	1.87
						25	6.66	1.75	6.96	1.79	7.27	1.82	7.43	1.83	7.59	1.85	7.90	1.88	8.23	1.92
2500	2500	2500		7500	110%	27	6.53	1.80	6.83	1.83	7.14	1.86	7.30	1.88	7.46	1.90	7.78	1.93	8.10	1.96
						29	6.40	1.84	6.70	1.87	7.01	1.91	7.17	1.92	7.33	1.94	7.65	1.97	7.97	2.01
						31	6.27	1.89	6.57	1.92	6.89	1.95	7.04	1.97	7.20	1.99	7.52	2.02	7.85	2.05
						33	6.14	1.93	6.45	1.97	6.76	2.00	6.92	2.02	7.07	2.03	7.39	2.07	7.72	2.10
						35	6.01	1.98	6.32	2.01	6.63	2.05	6.80	2.06	6.95	2.08	7.27	2.11	7.59	2.15
						37	5.88	2.03	6.19	2.06	6.50	2.10	6.66	2.11	6.82	2.13	7.14	2.16	7.47	2.20
						39	5.75	2.08	6.06	2.11	6.38	2.14	6.53	2.16	6.69	2.18	7.02	2.21	7.34	2.25
						42	5.56	2.15	5.87	2.19	6.19	2.22	6.34	2.24	6.50	2.25	6.83	2.29	7.15	2.32
						44	5.43	2.20	5.74	2.24	6.06	2.27	6.22	2.29	6.38	2.30	6.70	2.34	7.03	2.37
						46	5.31	2.25	5.62	2.29	5.93	2.32	6.09	2.34	6.25	2.36	6.58	2.39	6.91	2.42

12. Capacity Table

12-3. AJ068TXJ3KH/EA

COOLING

Combination (Capacity Index)				Combination (Total)	Combination (%)	Outdoor Temperature (°C,DB)	Indoor Temperature (°C, WB)													
							14		16		18		19		20		22		24	
							TC(kW)	PI(kW)	TC(kW)	PI(kW)	TC(kW)	PI(kW)	TC(kW)	PI(kW)	TC(kW)	PI(kW)	TC(kW)	PI(kW)	TC(kW)	PI(kW)
2500	2500	3500		8500	125%	10	7.65	1.49	7.95	1.53	8.25	1.56	8.41	1.57	8.56	1.59	8.87	1.62	9.19	1.65
						12	7.51	1.53	7.81	1.57	8.12	1.60	8.27	1.61	8.43	1.63	8.74	1.66	9.06	1.69
						14	7.38	1.58	7.68	1.61	7.99	1.64	8.14	1.66	8.30	1.67	8.61	1.70	8.93	1.74
						16	7.25	1.62	7.55	1.65	7.86	1.68	8.01	1.70	8.17	1.71	8.48	1.75	8.80	1.78
						18	7.12	1.66	7.42	1.69	7.73	1.72	7.88	1.74	8.04	1.76	8.35	1.79	8.68	1.82
						20	6.99	1.70	7.29	1.73	7.60	1.77	7.75	1.78	7.91	1.80	8.23	1.83	8.55	1.87
						21	6.92	1.72	7.22	1.76	7.53	1.79	7.69	1.81	7.84	1.82	8.16	1.86	8.48	1.89
						23	6.79	1.77	7.09	1.80	7.40	1.83	7.56	1.85	7.71	1.87	8.03	1.90	8.35	1.93
						25	6.66	1.81	6.96	1.85	7.27	1.88	7.43	1.90	7.59	1.91	7.90	1.95	8.23	1.98
						27	6.53	1.86	6.83	1.89	7.14	1.93	7.30	1.94	7.46	1.96	7.78	1.99	8.10	2.03
						29	6.40	1.90	6.70	1.94	7.01	1.97	7.17	1.99	7.33	2.01	7.65	2.04	7.97	2.07
						31	6.27	1.95	6.57	1.99	6.89	2.02	7.04	2.04	7.20	2.05	7.52	2.09	7.85	2.12
						33	6.14	2.00	6.45	2.03	6.76	2.07	6.92	2.09	7.07	2.10	7.39	2.14	7.72	2.17
						35	6.01	2.05	6.32	2.08	6.63	2.12	6.80	2.13	6.95	2.15	7.27	2.19	7.59	2.22
						37	5.88	2.10	6.19	2.13	6.50	2.17	6.66	2.18	6.82	2.20	7.14	2.24	7.47	2.27
						39	5.75	2.15	6.06	2.18	6.38	2.22	6.53	2.24	6.69	2.25	7.02	2.29	7.34	2.32
						42	5.56	2.22	5.87	2.26	6.19	2.29	6.34	2.31	6.50	2.33	6.83	2.37	7.15	2.40
						44	5.43	2.28	5.74	2.31	6.06	2.35	6.22	2.36	6.38	2.38	6.70	2.42	7.03	2.45
						46	5.31	2.33	5.62	2.36	5.93	2.40	6.09	2.42	6.25	2.44	6.58	2.47	6.91	2.51
2500	2500	5000		10000	147%	10	7.65	1.42	7.95	1.45	8.25	1.49	8.41	1.50	8.56	1.52	8.87	1.55	9.19	1.58
						12	7.51	1.46	7.81	1.49	8.12	1.52	8.27	1.54	8.43	1.55	8.74	1.58	9.06	1.62
						14	7.38	1.50	7.68	1.53	7.99	1.56	8.14	1.58	8.30	1.59	8.61	1.62	8.93	1.66
						16	7.25	1.54	7.55	1.57	7.86	1.60	8.01	1.62	8.17	1.63	8.48	1.66	8.80	1.70
						18	7.12	1.58	7.42	1.61	7.73	1.64	7.88	1.66	8.04	1.67	8.35	1.71	8.68	1.74
						20	6.99	1.62	7.29	1.65	7.60	1.68	7.75	1.70	7.91	1.72	8.23	1.75	8.55	1.78
						21	6.92	1.64	7.22	1.67	7.53	1.71	7.69	1.72	7.84	1.74	8.16	1.77	8.48	1.80
						23	6.79	1.68	7.09	1.72	7.40	1.75	7.56	1.76	7.71	1.78	8.03	1.81	8.35	1.84
						25	6.66	1.73	6.96	1.76	7.27	1.79	7.43	1.81	7.59	1.82	7.90	1.86	8.23	1.89
						27	6.53	1.77	6.83	1.80	7.14	1.84	7.30	1.85	7.46	1.87	7.78	1.90	8.10	1.93
						29	6.40	1.82	6.70	1.85	7.01	1.88	7.17	1.90	7.33	1.91	7.65	1.94	7.97	1.98
						31	6.27	1.86	6.57	1.89	6.89	1.93	7.04	1.94	7.20	1.96	7.52	1.99	7.85	2.02
						33	6.14	1.91	6.45	1.94	6.76	1.97	6.92	1.99	7.07	2.00	7.39	2.04	7.72	2.07
						35	6.01	1.95	6.32	1.98	6.63	2.02	6.80	2.03	6.95	2.05	7.27	2.08	7.59	2.12
						37	5.88	2.00	6.19	2.03	6.50	2.07	6.66	2.08	6.82	2.10	7.14	2.13	7.47	2.16
						39	5.75	2.05	6.06	2.08	6.38	2.11	6.53	2.13	6.69	2.15	7.02	2.18	7.34	2.21
						42	5.56	2.12	5.87	2.15	6.19	2.19	6.34	2.20	6.50	2.22	6.83	2.25	7.15	2.29
						44	5.43	2.17	5.74	2.20	6.06	2.24	6.22	2.25	6.38	2.27	6.70	2.30	7.03	2.34
						46	5.31	2.22	5.62	2.25	5.93	2.29	6.09	2.30	6.25	2.32	6.58	2.36	6.91	2.39

12. Capacity Table

12-3. AJ068TXJ3KH/EA

COOLING

Combination (Capacity Index)				Combination (Total)	Combination (%)	Outdoor Temperature (°C,DB)	Indoor Temperature (°C, WB)													
							14		16		18		19		20		22		24	
							TC(kW)	PI(kW)	TC(kW)	PI(kW)	TC(kW)	PI(kW)	TC(kW)	PI(kW)	TC(kW)	PI(kW)	TC(kW)	PI(kW)	TC(kW)	PI(kW)
2500	3500	3500		9500	140%	10	7.65	1.42	7.95	1.45	8.25	1.48	8.41	1.49	8.56	1.51	8.87	1.54	9.19	1.57
						12	7.51	1.46	7.81	1.49	8.12	1.52	8.27	1.53	8.43	1.55	8.74	1.58	9.06	1.61
						14	7.38	1.49	7.68	1.52	7.99	1.56	8.14	1.57	8.30	1.59	8.61	1.62	8.93	1.65
						16	7.25	1.53	7.55	1.56	7.86	1.59	8.01	1.61	8.17	1.63	8.48	1.66	8.80	1.69
						18	7.12	1.57	7.42	1.60	7.73	1.64	7.88	1.65	8.04	1.67	8.35	1.70	8.68	1.73
						20	6.99	1.61	7.29	1.65	7.60	1.68	7.75	1.69	7.91	1.71	8.23	1.74	8.55	1.77
						21	6.92	1.63	7.22	1.67	7.53	1.70	7.69	1.71	7.84	1.73	8.16	1.76	8.48	1.79
						23	6.79	1.68	7.09	1.71	7.40	1.74	7.56	1.76	7.71	1.77	8.03	1.80	8.35	1.83
						25	6.66	1.72	6.96	1.75	7.27	1.78	7.43	1.80	7.59	1.81	7.90	1.85	8.23	1.88
						27	6.53	1.76	6.83	1.79	7.14	1.83	7.30	1.84	7.46	1.86	7.78	1.89	8.10	1.92
						29	6.40	1.81	6.70	1.84	7.01	1.87	7.17	1.89	7.33	1.90	7.65	1.93	7.97	1.97
						31	6.27	1.85	6.57	1.88	6.89	1.92	7.04	1.93	7.20	1.95	7.52	1.98	7.85	2.01
						33	6.14	1.90	6.45	1.93	6.76	1.96	6.92	1.98	7.07	1.99	7.39	2.03	7.72	2.06
						35	6.01	1.94	6.32	1.98	6.63	2.01	6.80	2.02	6.95	2.04	7.27	2.07	7.59	2.11
						37	5.88	1.99	6.19	2.02	6.50	2.06	6.66	2.07	6.82	2.09	7.14	2.12	7.47	2.15
						39	5.75	2.04	6.06	2.07	6.38	2.10	6.53	2.12	6.69	2.14	7.02	2.17	7.34	2.20
						42	5.56	2.11	5.87	2.14	6.19	2.18	6.34	2.19	6.50	2.21	6.83	2.24	7.15	2.28
						44	5.43	2.16	5.74	2.19	6.06	2.23	6.22	2.24	6.38	2.26	6.70	2.29	7.03	2.33
						46	5.31	2.21	5.62	2.24	5.93	2.28	6.09	2.29	6.25	2.31	6.58	2.34	6.91	2.38
2500	3500	5000		11000	162%	10	7.65	1.45	7.95	1.48	8.25	1.51	8.41	1.53	8.56	1.55	8.87	1.58	9.19	1.61
						12	7.51	1.49	7.81	1.52	8.12	1.55	8.27	1.57	8.43	1.58	8.74	1.62	9.06	1.65
						14	7.38	1.53	7.68	1.56	7.99	1.59	8.14	1.61	8.30	1.63	8.61	1.66	8.93	1.69
						16	7.25	1.57	7.55	1.60	7.86	1.63	8.01	1.65	8.17	1.67	8.48	1.70	8.80	1.73
						18	7.12	1.61	7.42	1.64	7.73	1.68	7.88	1.69	8.04	1.71	8.35	1.74	8.68	1.77
						20	6.99	1.65	7.29	1.69	7.60	1.72	7.75	1.73	7.91	1.75	8.23	1.78	8.55	1.81
						21	6.92	1.68	7.22	1.71	7.53	1.74	7.69	1.76	7.84	1.77	8.16	1.80	8.48	1.84
						23	6.79	1.72	7.09	1.75	7.40	1.78	7.56	1.80	7.71	1.82	8.03	1.85	8.35	1.88
						25	6.66	1.76	6.96	1.79	7.27	1.83	7.43	1.84	7.59	1.86	7.90	1.89	8.23	1.92
						27	6.53	1.81	6.83	1.84	7.14	1.87	7.30	1.89	7.46	1.90	7.78	1.94	8.10	1.97
						29	6.40	1.85	6.70	1.88	7.01	1.92	7.17	1.93	7.33	1.95	7.65	1.98	7.97	2.02
						31	6.27	1.90	6.57	1.93	6.89	1.96	7.04	1.98	7.20	2.00	7.52	2.03	7.85	2.06
						33	6.14	1.94	6.45	1.98	6.76	2.01	6.92	2.03	7.07	2.04	7.39	2.08	7.72	2.11
						35	6.01	1.99	6.32	2.02	6.63	2.06	6.80	2.07	6.95	2.09	7.27	2.12	7.59	2.16
						37	5.88	2.04	6.19	2.07	6.50	2.11	6.66	2.12	6.82	2.14	7.14	2.17	7.47	2.21
						39	5.75	2.09	6.06	2.12	6.38	2.16	6.53	2.17	6.69	2.19	7.02	2.22	7.34	2.26
						42	5.56	2.16	5.87	2.20	6.19	2.23	6.34	2.25	6.50	2.26	6.83	2.30	7.15	2.33
						44	5.43	2.21	5.74	2.25	6.06	2.28	6.22	2.30	6.38	2.32	6.70	2.35	7.03	2.38
						46	5.31	2.26	5.62	2.30	5.93	2.33	6.09	2.35	6.25	2.37	6.58	2.40	6.91	2.44

12. Capacity Table

12-3. AJ068TXJ3KH/EA

COOLING

Combination (Capacity Index)				Combination (Total)	Combination (%)	Outdoor Temperature (°C,DB)	Indoor Temperature (°C, WB)													
							14		16		18		19		20		22		24	
							TC(kW)	PI(kW)	TC(kW)	PI(kW)	TC(kW)	PI(kW)	TC(kW)	PI(kW)	TC(kW)	PI(kW)	TC(kW)	PI(kW)	TC(kW)	PI(kW)
3500	3500	3500		10500	154%	10	7.65	1.40	7.95	1.43	8.25	1.46	8.41	1.48	8.56	1.49	8.87	1.52	9.19	1.55
						12	7.51	1.44	7.81	1.47	8.12	1.50	8.27	1.52	8.43	1.53	8.74	1.56	9.06	1.59
						14	7.38	1.48	7.68	1.51	7.99	1.54	8.14	1.55	8.30	1.57	8.61	1.60	8.93	1.63
						16	7.25	1.52	7.55	1.55	7.86	1.58	8.01	1.59	8.17	1.61	8.48	1.64	8.80	1.67
						18	7.12	1.56	7.42	1.59	7.73	1.62	7.88	1.63	8.04	1.65	8.35	1.68	8.68	1.71
						20	6.99	1.60	7.29	1.63	7.60	1.66	7.75	1.68	7.91	1.69	8.23	1.72	8.55	1.75
						21	6.92	1.62	7.22	1.65	7.53	1.68	7.69	1.70	7.84	1.71	8.16	1.74	8.48	1.77
						23	6.79	1.66	7.09	1.69	7.40	1.72	7.56	1.74	7.71	1.75	8.03	1.78	8.35	1.82
						25	6.66	1.70	6.96	1.73	7.27	1.76	7.43	1.78	7.59	1.80	7.90	1.83	8.23	1.86
						27	6.53	1.74	6.83	1.78	7.14	1.81	7.30	1.82	7.46	1.84	7.78	1.87	8.10	1.90
						29	6.40	1.79	6.70	1.82	7.01	1.85	7.17	1.87	7.33	1.88	7.65	1.92	7.97	1.95
						31	6.27	1.83	6.57	1.86	6.89	1.90	7.04	1.91	7.20	1.93	7.52	1.96	7.85	1.99
						33	6.14	1.88	6.45	1.91	6.76	1.94	6.92	1.96	7.07	1.97	7.39	2.01	7.72	2.04
						35	6.01	1.92	6.32	1.96	6.63	1.99	6.80	2.00	6.95	2.02	7.27	2.05	7.59	2.09
						37	5.88	1.97	6.19	2.00	6.50	2.03	6.66	2.05	6.82	2.07	7.14	2.10	7.47	2.13
						39	5.75	2.02	6.06	2.05	6.38	2.08	6.53	2.10	6.69	2.12	7.02	2.15	7.34	2.18
						42	5.56	2.09	5.87	2.12	6.19	2.15	6.34	2.17	6.50	2.19	6.83	2.22	7.15	2.25
						44	5.43	2.14	5.74	2.17	6.06	2.20	6.22	2.22	6.38	2.24	6.70	2.27	7.03	2.30
						46	5.31	2.19	5.62	2.22	5.93	2.25	6.09	2.27	6.25	2.29	6.58	2.32	6.91	2.35

NOTE

1 Cooling capacity is based on 27°CDB / 19°CWB (indoor temperature), 35°CDB (outdoor temperature).

2 Heating capacity is based on 20°CDB (indoor temperature), 7°CDB/6°CWB (outdoor temperature).

3 The above is the value for connecting with the following indoor units.
- AJ***TNAPKH : Premium Wind Free

4 Capacities are based on the following conditions:
- Corresponding refrigerant piping length : 5m / - Level difference : 0m

5 The total ability of connected a indoor unit is up to 11kW

6 It is impossible to connect the indoor unit for one room only.

7 This data is reference data for temperature capacity trend.

12. Capacity Table

12-3. AJ068TXJ3KH/EA

HEATING

Combination (Capacity Index)				Combination (Total)	Combination (%)	Outdoor Temperature (°C,DB)	Indoor Temperature (°C, DB)													
							14		16		18		20		21		22		24	
							TC(kW)	PI(kW)	TC(kW)	PI(kW)	TC(kW)	PI(kW)	TC(kW)	PI(kW)	TC(kW)	PI(kW)	TC(kW)	PI(kW)	TC(kW)	PI(kW)
2000				2000	29%	-15	1.26	0.76	1.22	0.77	1.18	0.78	1.17	0.78	1.15	0.79	1.13	0.79	1.11	0.80
						-10	1.51	0.79	1.47	0.81	1.43	0.82	1.41	0.82	1.40	0.83	1.37	0.83	1.34	0.84
						-5	1.76	0.83	1.71	0.85	1.67	0.86	1.66	0.86	1.64	0.87	1.61	0.88	1.58	0.88
						0	2.01	0.87	1.96	0.89	1.92	0.90	1.90	0.90	1.88	0.91	1.85	0.92	1.82	0.93
						2	2.11	0.89	2.06	0.90	2.02	0.91	2.00	0.92	1.98	0.92	1.95	0.93	1.92	0.94
						7	2.31	0.92	2.26	0.93	2.21	0.95	2.20	0.95	2.17	0.96	2.14	0.97	2.11	0.98
						10	2.51	0.95	2.46	0.96	2.41	0.98	2.39	0.98	2.37	0.99	2.33	1.00	2.30	1.01
						15	2.76	0.99	2.71	1.00	2.66	1.02	2.64	1.02	2.61	1.03	2.57	1.04	2.54	1.05
2500				2500	37%	-15	1.83	0.91	1.77	0.93	1.72	0.94	1.70	0.95	1.68	0.95	1.64	0.96	1.61	0.97
						-10	2.19	0.96	2.13	0.98	2.08	0.99	2.05	1.00	2.03	1.00	1.99	1.01	1.95	1.02
						-5	2.56	1.01	2.49	1.02	2.44	1.04	2.41	1.04	2.38	1.05	2.34	1.06	2.30	1.07
						0	2.92	1.06	2.85	1.07	2.79	1.09	2.76	1.09	2.74	1.10	2.69	1.11	2.65	1.12
						2	3.07	1.08	3.00	1.09	2.94	1.11	2.91	1.11	2.88	1.12	2.83	1.13	2.79	1.14
						7	3.36	1.11	3.29	1.13	3.22	1.14	3.20	1.15	3.16	1.16	3.11	1.17	3.07	1.18
						10	3.65	1.15	3.58	1.17	3.51	1.18	3.48	1.19	3.45	1.20	3.39	1.21	3.34	1.22
						15	4.02	1.20	3.94	1.21	3.87	1.23	3.83	1.24	3.80	1.25	3.74	1.26	3.69	1.27
3500				3500	51%	-15	2.29	1.07	2.22	1.09	2.15	1.10	2.13	1.11	2.10	1.12	2.05	1.13	2.01	1.14
						-10	2.74	1.13	2.67	1.15	2.60	1.16	2.57	1.17	2.54	1.17	2.49	1.19	2.44	1.20
						-5	3.20	1.19	3.12	1.20	3.04	1.22	3.01	1.23	2.98	1.23	2.92	1.25	2.88	1.26
						0	3.65	1.24	3.57	1.26	3.49	1.28	3.46	1.28	3.42	1.29	3.36	1.30	3.31	1.32
						2	3.83	1.26	3.75	1.28	3.67	1.30	3.63	1.31	3.60	1.31	3.54	1.33	3.48	1.34
						7	4.20	1.31	4.11	1.33	4.03	1.34	4.00	1.35	3.95	1.36	3.89	1.37	3.83	1.39
						10	4.56	1.35	4.47	1.37	4.38	1.39	4.35	1.40	4.31	1.41	4.24	1.42	4.18	1.43
						15	5.02	1.40	4.92	1.43	4.83	1.44	4.79	1.45	4.75	1.46	4.68	1.48	4.62	1.49
5000				5000	74%	-15	3.43	1.45	3.33	1.47	3.23	1.49	3.19	1.50	3.15	1.50	3.08	1.52	3.02	1.53
						-10	4.11	1.52	4.00	1.55	3.90	1.57	3.85	1.57	3.81	1.58	3.73	1.60	3.67	1.61
						-5	4.80	1.60	4.67	1.62	4.57	1.64	4.52	1.65	4.47	1.66	4.39	1.68	4.31	1.69
						0	5.48	1.67	5.35	1.70	5.24	1.72	5.18	1.73	5.13	1.74	5.04	1.76	4.97	1.77
						2	5.75	1.70	5.62	1.73	5.50	1.75	5.45	1.76	5.40	1.77	5.31	1.79	5.23	1.81
						7	6.30	1.76	6.16	1.79	6.04	1.81	6.00	1.82	5.93	1.83	5.83	1.85	5.75	1.87
						10	6.84	1.82	6.70	1.85	6.58	1.87	6.52	1.88	6.46	1.89	6.36	1.92	6.27	1.93
						15	7.53	1.89	7.38	1.92	7.25	1.95	7.19	1.96	7.13	1.97	7.02	1.99	6.92	2.01
2000	2000			4000	59%	-15	2.52	0.97	2.44	0.98	2.37	1.00	2.34	1.00	2.31	1.01	2.26	1.02	2.21	1.03
						-10	3.02	1.02	2.93	1.04	2.86	1.05	2.82	1.06	2.79	1.06	2.74	1.07	2.69	1.08
						-5	3.52	1.07	3.43	1.09	3.35	1.10	3.31	1.11	3.28	1.11	3.22	1.13	3.16	1.14
						0	4.02	1.12	3.92	1.14	3.84	1.15	3.80	1.16	3.76	1.17	3.70	1.18	3.64	1.19
						2	4.22	1.14	4.12	1.16	4.04	1.17	4.00	1.18	3.96	1.19	3.89	1.20	3.83	1.21
						7	4.62	1.18	4.52	1.20	4.43	1.21	4.40	1.22	4.35	1.23	4.28	1.24	4.21	1.25
						10	5.02	1.22	4.92	1.24	4.82	1.25	4.78	1.26	4.74	1.27	4.66	1.28	4.60	1.30
						15	5.52	1.27	5.41	1.29	5.32	1.31	5.27	1.31	5.23	1.32	5.15	1.34	5.08	1.35
2000	2500			4500	66%	-15	3.15	1.18	3.05	1.20	2.96	1.22	2.92	1.22	2.89	1.23	2.82	1.24	2.77	1.25
						-10	3.77	1.25	3.67	1.27	3.57	1.28	3.53	1.29	3.49	1.30	3.42	1.31	3.36	1.32
						-5	4.40	1.31	4.29	1.33	4.19	1.35	4.14	1.35	4.10	1.36	4.02	1.37	3.96	1.39
						0	5.02	1.37	4.90	1.39	4.80	1.41	4.75	1.42	4.71	1.42	4.62	1.44	4.55	1.45
						2	5.27	1.39	5.15	1.41	5.05	1.43	5.00	1.44	4.95	1.45	4.86	1.47	4.79	1.48
						7	5.77	1.44	5.65	1.46	5.54	1.48	5.50	1.49	5.44	1.50	5.35	1.52	5.27	1.53
						10	6.27	1.49	6.15	1.51	6.03	1.53	5.98	1.54	5.92	1.55	5.83	1.57	5.75	1.58
						15	6.90	1.55	6.77	1.57	6.65	1.59	6.59	1.60	6.53	1.61	6.44	1.63	6.35	1.65

12. Capacity Table

12-3. AJ068TXJ3KH/EA

HEATING

Combination (Capacity Index)				Combination (Total)	Combination (%)	Outdoor Temperature (°C,DB)	Indoor Temperature (°C, DB)													
							14		16		18		20		21		22		24	
							TC(kW)	PI(kW)	TC(kW)	PI(kW)	TC(kW)	PI(kW)	TC(kW)	PI(kW)	TC(kW)	PI(kW)	TC(kW)	PI(kW)	TC(kW)	PI(kW)
2000	3500			5500	81%	-15	3.55	1.33	3.44	1.35	3.34	1.36	3.29	1.37	3.25	1.38	3.18	1.39	3.12	1.40
						-10	4.25	1.40	4.13	1.42	4.03	1.44	3.98	1.45	3.94	1.45	3.86	1.47	3.79	1.48
						-5	4.95	1.47	4.83	1.49	4.72	1.51	4.67	1.52	4.62	1.53	4.53	1.54	4.46	1.55
						0	5.66	1.53	5.53	1.56	5.41	1.58	5.36	1.59	5.30	1.60	5.21	1.61	5.13	1.63
						2	5.94	1.56	5.81	1.59	5.69	1.61	5.63	1.62	5.58	1.63	5.48	1.64	5.40	1.66
						7	6.51	1.62	6.37	1.64	6.24	1.66	6.20	1.67	6.13	1.68	6.03	1.70	5.94	1.72
						10	7.07	1.67	6.93	1.69	6.80	1.72	6.74	1.73	6.68	1.74	6.57	1.76	6.48	1.77
						15	7.78	1.74	7.63	1.76	7.49	1.79	7.43	1.80	7.37	1.81	7.25	1.83	7.15	1.85
2000	5000			7000	103%	-15	4.47	1.58	4.33	1.61	4.20	1.63	4.14	1.64	4.09	1.64	4.00	1.66	3.92	1.67
						-10	5.35	1.66	5.20	1.69	5.07	1.71	5.01	1.72	4.95	1.73	4.85	1.75	4.77	1.76
						-5	6.23	1.75	6.08	1.77	5.94	1.80	5.87	1.81	5.81	1.82	5.70	1.84	5.61	1.85
						0	7.12	1.83	6.96	1.86	6.81	1.88	6.74	1.89	6.67	1.90	6.56	1.92	6.45	1.94
						2	7.47	1.86	7.31	1.89	7.15	1.91	7.08	1.93	7.02	1.94	6.90	1.96	6.79	1.97
						7	8.19	1.93	8.01	1.95	7.85	1.98	7.80	1.99	7.71	2.00	7.58	2.03	7.47	2.04
						10	8.90	1.99	8.72	2.02	8.55	2.05	8.47	2.06	8.40	2.07	8.27	2.09	8.15	2.11
						15	9.79	2.07	9.60	2.10	9.43	2.13	9.34	2.14	9.27	2.16	9.13	2.18	9.00	2.20
2500	2500			5000	74%	-15	3.78	1.50	3.66	1.52	3.55	1.54	3.51	1.55	3.46	1.56	3.38	1.58	3.32	1.59
						-10	4.53	1.58	4.40	1.60	4.29	1.63	4.24	1.64	4.19	1.64	4.10	1.66	4.03	1.67
						-5	5.27	1.66	5.14	1.68	5.02	1.71	4.97	1.72	4.92	1.73	4.83	1.74	4.75	1.76
						0	6.02	1.74	5.89	1.76	5.76	1.79	5.70	1.80	5.65	1.81	5.55	1.83	5.46	1.84
						2	6.32	1.77	6.18	1.79	6.05	1.82	5.99	1.83	5.94	1.84	5.84	1.86	5.75	1.88
						7	6.93	1.83	6.78	1.86	6.64	1.88	6.60	1.89	6.52	1.90	6.42	1.92	6.32	1.94
						10	7.53	1.89	7.37	1.92	7.24	1.94	7.17	1.96	7.11	1.97	7.00	1.99	6.90	2.01
						15	8.28	1.97	8.12	2.00	7.98	2.02	7.91	2.03	7.84	2.05	7.72	2.07	7.62	2.09
2500	3500			6000	88%	-15	4.18	1.55	4.05	1.57	3.93	1.59	3.88	1.60	3.83	1.61	3.74	1.63	3.67	1.64
						-10	5.01	1.63	4.87	1.66	4.74	1.68	4.69	1.69	4.63	1.70	4.54	1.71	4.46	1.73
						-5	5.83	1.71	5.69	1.74	5.56	1.76	5.50	1.77	5.44	1.78	5.34	1.80	5.25	1.81
						0	6.66	1.79	6.51	1.82	6.37	1.84	6.31	1.85	6.25	1.86	6.14	1.88	6.04	1.90
						2	7.00	1.82	6.84	1.85	6.70	1.88	6.63	1.89	6.57	1.90	6.46	1.92	6.36	1.94
						7	7.66	1.89	7.50	1.92	7.35	1.94	7.30	1.95	7.22	1.96	7.10	1.99	6.99	2.00
						10	8.33	1.95	8.16	1.98	8.00	2.01	7.93	2.02	7.86	2.03	7.74	2.05	7.63	2.07
						15	9.16	2.03	8.98	2.06	8.82	2.09	8.75	2.10	8.67	2.11	8.54	2.14	8.42	2.16
2500	5000			7500	110%	-15	4.47	1.62	4.33	1.65	4.20	1.67	4.14	1.68	4.09	1.69	4.00	1.70	3.92	1.72
						-10	5.35	1.71	5.20	1.73	5.07	1.75	5.01	1.77	4.95	1.77	4.85	1.79	4.77	1.81
						-5	6.23	1.79	6.08	1.82	5.94	1.84	5.87	1.85	5.81	1.86	5.70	1.88	5.61	1.90
						0	7.12	1.87	6.96	1.90	6.81	1.93	6.74	1.94	6.67	1.95	6.56	1.97	6.45	1.99
						2	7.47	1.91	7.31	1.94	7.15	1.96	7.08	1.97	7.02	1.99	6.90	2.01	6.79	2.02
						7	8.19	1.97	8.01	2.00	7.85	2.03	7.80	2.04	7.71	2.05	7.58	2.08	7.47	2.10
						10	8.90	2.04	8.72	2.07	8.55	2.10	8.47	2.11	8.40	2.12	8.27	2.15	8.15	2.17
						15	9.79	2.12	9.60	2.15	9.43	2.18	9.34	2.20	9.27	2.21	9.13	2.23	9.00	2.26
3500	3500			7000	103%	-15	4.47	1.58	4.33	1.61	4.20	1.63	4.14	1.64	4.09	1.64	4.00	1.66	3.92	1.67
						-10	5.35	1.66	5.20	1.69	5.07	1.71	5.01	1.72	4.95	1.73	4.85	1.75	4.77	1.76
						-5	6.23	1.75	6.08	1.77	5.94	1.80	5.87	1.81	5.81	1.82	5.70	1.84	5.61	1.85
						0	7.12	1.83	6.96	1.86	6.81	1.88	6.74	1.89	6.67	1.90	6.56	1.92	6.45	1.94
						2	7.47	1.86	7.31	1.89	7.15	1.91	7.08	1.93	7.02	1.94	6.90	1.96	6.79	1.97
						7	8.19	1.93	8.01	1.95	7.85	1.98	7.80	1.99	7.71	2.00	7.58	2.03	7.47	2.04
						10	8.90	1.99	8.72	2.02	8.55	2.05	8.47	2.06	8.40	2.07	8.27	2.09	8.15	2.11
						15	9.79	2.07	9.60	2.10	9.43	2.13	9.34	2.14	9.27	2.16	9.13	2.18	9.00	2.20

12. Capacity Table

12-3. AJ068TXJ3KH/EA

HEATING

Combination (Capacity Index)				Combination (Total)	Combination (%)	Outdoor Temperature (°C,DB)	Indoor Temperature (°C, DB)													
							14		16		18		20		21		22		24	
							TC(kW)	PI(kW)	TC(kW)	PI(kW)	TC(kW)	PI(kW)	TC(kW)	PI(kW)	TC(kW)	PI(kW)	TC(kW)	PI(kW)	TC(kW)	PI(kW)
3500	5000			8500	125%	-15	4.58	1.66	4.44	1.69	4.31	1.71	4.25	1.72	4.20	1.73	4.10	1.74	4.02	1.76
						-10	5.49	1.75	5.33	1.77	5.20	1.80	5.14	1.81	5.08	1.82	4.97	1.84	4.89	1.85
						-5	6.39	1.83	6.23	1.86	6.09	1.89	6.02	1.90	5.96	1.91	5.85	1.93	5.75	1.94
						0	7.30	1.92	7.13	1.95	6.98	1.98	6.91	1.99	6.84	2.00	6.72	2.02	6.62	2.04
						2	7.67	1.95	7.49	1.98	7.34	2.01	7.27	2.02	7.20	2.03	7.07	2.06	6.97	2.07
						7	8.40	2.02	8.22	2.05	8.05	2.08	8.00	2.09	7.91	2.11	7.78	2.13	7.66	2.15
						10	9.12	2.09	8.94	2.12	8.77	2.15	8.69	2.16	8.62	2.18	8.48	2.20	8.36	2.22
						15	10.04	2.17	9.84	2.21	9.67	2.24	9.58	2.25	9.51	2.26	9.36	2.29	9.23	2.31
5000	5000			10000	147%	-15	4.58	1.65	4.44	1.68	4.31	1.70	4.25	1.71	4.20	1.72	4.10	1.74	4.02	1.75
						-10	5.49	1.74	5.33	1.77	5.20	1.79	5.14	1.80	5.08	1.81	4.97	1.83	4.89	1.84
						-5	6.39	1.83	6.23	1.85	6.09	1.88	6.02	1.89	5.96	1.90	5.85	1.92	5.75	1.94
						0	7.30	1.91	7.13	1.94	6.98	1.97	6.91	1.98	6.84	1.99	6.72	2.01	6.62	2.03
						2	7.67	1.95	7.49	1.97	7.34	2.00	7.27	2.01	7.20	2.02	7.07	2.05	6.97	2.06
						7	8.40	2.01	8.22	2.04	8.05	2.07	8.00	2.08	7.91	2.10	7.78	2.12	7.66	2.14
						10	9.12	2.08	8.94	2.11	8.77	2.14	8.69	2.15	8.62	2.17	8.48	2.19	8.36	2.21
						15	10.04	2.16	9.84	2.20	9.67	2.23	9.58	2.24	9.51	2.25	9.36	2.28	9.23	2.30
2000	2000	2000		6000	88%	-15	3.78	1.40	3.66	1.42	3.55	1.44	3.51	1.45	3.46	1.45	3.38	1.47	3.32	1.48
						-10	4.53	1.47	4.40	1.49	4.29	1.51	4.24	1.52	4.19	1.53	4.10	1.55	4.03	1.56
						-5	5.27	1.55	5.14	1.57	5.02	1.59	4.97	1.60	4.92	1.61	4.83	1.62	4.75	1.64
						0	6.02	1.62	5.89	1.64	5.76	1.66	5.70	1.67	5.65	1.68	5.55	1.70	5.46	1.72
						2	6.32	1.65	6.18	1.67	6.05	1.69	5.99	1.70	5.94	1.71	5.84	1.73	5.75	1.75
						7	6.93	1.70	6.78	1.73	6.64	1.75	6.60	1.76	6.52	1.77	6.42	1.79	6.32	1.81
						10	7.53	1.76	7.37	1.79	7.24	1.81	7.17	1.82	7.11	1.83	7.00	1.85	6.90	1.87
						15	8.28	1.83	8.12	1.86	7.98	1.88	7.91	1.89	7.84	1.91	7.72	1.93	7.62	1.95
2000	2000	2500		6500	96%	-15	4.41	1.45	4.27	1.48	4.15	1.50	4.09	1.50	4.04	1.51	3.95	1.53	3.87	1.54
						-10	5.28	1.53	5.13	1.55	5.00	1.57	4.94	1.58	4.89	1.59	4.79	1.61	4.70	1.62
						-5	6.15	1.61	6.00	1.63	5.86	1.65	5.80	1.66	5.74	1.67	5.63	1.69	5.54	1.70
						0	7.03	1.68	6.87	1.71	6.72	1.73	6.65	1.74	6.59	1.75	6.47	1.77	6.37	1.78
						2	7.38	1.71	7.21	1.74	7.06	1.76	6.99	1.77	6.93	1.78	6.81	1.80	6.71	1.82
						7	8.08	1.77	7.91	1.80	7.75	1.82	7.70	1.83	7.61	1.84	7.49	1.86	7.38	1.88
						10	8.78	1.83	8.60	1.86	8.44	1.88	8.37	1.89	8.29	1.91	8.16	1.93	8.05	1.94
						15	9.66	1.90	9.48	1.93	9.30	1.96	9.22	1.97	9.15	1.98	9.01	2.00	8.88	2.02
2000	2000	3500		7500	110%	-15	4.58	1.53	4.44	1.55	4.31	1.57	4.25	1.58	4.20	1.59	4.10	1.60	4.02	1.62
						-10	5.49	1.61	5.33	1.63	5.20	1.65	5.14	1.66	5.08	1.67	4.97	1.69	4.89	1.70
						-5	6.39	1.69	6.23	1.71	6.09	1.73	6.02	1.74	5.96	1.75	5.85	1.77	5.75	1.79
						0	7.30	1.76	7.13	1.79	6.98	1.81	6.91	1.83	6.84	1.84	6.72	1.85	6.62	1.87
						2	7.67	1.80	7.49	1.82	7.34	1.85	7.27	1.86	7.20	1.87	7.07	1.89	6.97	1.91
						7	8.40	1.86	8.22	1.89	8.05	1.91	8.00	1.92	7.91	1.93	7.78	1.95	7.66	1.97
						10	9.12	1.92	8.94	1.95	8.77	1.97	8.69	1.99	8.62	2.00	8.48	2.02	8.36	2.04
						15	10.04	2.00	9.84	2.03	9.67	2.05	9.58	2.07	9.51	2.08	9.36	2.10	9.23	2.12
2000	2000	5000		9000	132%	-15	4.58	1.56	4.44	1.58	4.31	1.60	4.25	1.61	4.20	1.62	4.10	1.64	4.02	1.65
						-10	5.49	1.64	5.33	1.66	5.20	1.69	5.14	1.70	5.08	1.71	4.97	1.72	4.89	1.74
						-5	6.39	1.72	6.23	1.75	6.09	1.77	6.02	1.78	5.96	1.79	5.85	1.81	5.75	1.82
						0	7.30	1.80	7.13	1.83	6.98	1.85	6.91	1.86	6.84	1.87	6.72	1.89	6.62	1.91
						2	7.67	1.83	7.49	1.86	7.34	1.89	7.27	1.90	7.20	1.91	7.07	1.93	6.97	1.95
						7	8.40	1.90	8.22	1.92	8.05	1.95	8.00	1.96	7.91	1.97	7.78	2.00	7.66	2.01
						10	9.12	1.96	8.94	1.99	8.77	2.02	8.69	2.03	8.62	2.04	8.48	2.06	8.36	2.08
						15	10.04	2.04	9.84	2.07	9.67	2.10	9.58	2.11	9.51	2.12	9.36	2.15	9.23	2.17

12. Capacity Table

12-3. AJ068TXJ3KH/EA

HEATING

Combination (Capacity Index)				Combination (Total)	Combination (%)	Outdoor Temperature (°C,DB)	Indoor Temperature (°C, DB)													
							14		16		18		20		21		22		24	
							TC(kW)	PI(kW)	TC(kW)	PI(kW)	TC(kW)	PI(kW)	TC(kW)	PI(kW)	TC(kW)	PI(kW)	TC(kW)	PI(kW)	TC(kW)	PI(kW)
2000	2500	2500		7000	103%	-15	4.58	1.49	4.44	1.52	4.31	1.54	4.25	1.55	4.20	1.55	4.10	1.57	4.02	1.58
						-10	5.49	1.57	5.33	1.60	5.20	1.62	5.14	1.63	5.08	1.64	4.97	1.65	4.89	1.67
						-5	6.39	1.65	6.23	1.67	6.09	1.70	6.02	1.71	5.96	1.72	5.85	1.73	5.75	1.75
						0	7.30	1.73	7.13	1.75	6.98	1.78	6.91	1.79	6.84	1.80	6.72	1.82	6.62	1.83
						2	7.67	1.76	7.49	1.78	7.34	1.81	7.27	1.82	7.20	1.83	7.07	1.85	6.97	1.87
						7	8.40	1.82	8.22	1.85	8.05	1.87	8.00	1.88	7.91	1.89	7.78	1.91	7.66	1.93
						10	9.12	1.88	8.94	1.91	8.77	1.93	8.69	1.95	8.62	1.96	8.48	1.98	8.36	2.00
						15	10.04	1.96	9.84	1.98	9.67	2.01	9.58	2.02	9.51	2.04	9.36	2.06	9.23	2.08
2000	2500	3500		8000	118%	-15	4.58	1.52	4.44	1.54	4.31	1.56	4.25	1.57	4.20	1.58	4.10	1.59	4.02	1.61
						-10	5.49	1.60	5.33	1.62	5.20	1.64	5.14	1.65	5.08	1.66	4.97	1.68	4.89	1.69
						-5	6.39	1.68	6.23	1.70	6.09	1.72	6.02	1.73	5.96	1.74	5.85	1.76	5.75	1.78
						0	7.30	1.76	7.13	1.78	6.98	1.80	6.91	1.82	6.84	1.83	6.72	1.85	6.62	1.86
						2	7.67	1.79	7.49	1.81	7.34	1.84	7.27	1.85	7.20	1.86	7.07	1.88	6.97	1.90
						7	8.40	1.85	8.22	1.88	8.05	1.90	8.00	1.91	7.91	1.92	7.78	1.94	7.66	1.96
						10	9.12	1.91	8.94	1.94	8.77	1.96	8.69	1.98	8.62	1.99	8.48	2.01	8.36	2.03
						15	10.04	1.99	9.84	2.02	9.67	2.04	9.58	2.06	9.51	2.07	9.36	2.09	9.23	2.11
2000	2500	5000		9500	140%	-15	4.58	1.53	4.44	1.55	4.31	1.57	4.25	1.58	4.20	1.59	4.10	1.60	4.02	1.62
						-10	5.49	1.61	5.33	1.63	5.20	1.65	5.14	1.66	5.08	1.67	4.97	1.69	4.89	1.70
						-5	6.39	1.69	6.23	1.71	6.09	1.73	6.02	1.74	5.96	1.75	5.85	1.77	5.75	1.79
						0	7.30	1.76	7.13	1.79	6.98	1.81	6.91	1.83	6.84	1.84	6.72	1.85	6.62	1.87
						2	7.67	1.80	7.49	1.82	7.34	1.85	7.27	1.86	7.20	1.87	7.07	1.89	6.97	1.91
						7	8.40	1.86	8.22	1.89	8.05	1.91	8.00	1.92	7.91	1.93	7.78	1.95	7.66	1.97
						10	9.12	1.92	8.94	1.95	8.77	1.97	8.69	1.99	8.62	2.00	8.48	2.02	8.36	2.04
						15	10.04	2.00	9.84	2.03	9.67	2.05	9.58	2.07	9.51	2.08	9.36	2.10	9.23	2.12
2000	3500	3500		9000	132%	-15	4.58	1.56	4.44	1.58	4.31	1.60	4.25	1.61	4.20	1.62	4.10	1.64	4.02	1.65
						-10	5.49	1.64	5.33	1.66	5.20	1.69	5.14	1.70	5.08	1.71	4.97	1.72	4.89	1.74
						-5	6.39	1.72	6.23	1.75	6.09	1.77	6.02	1.78	5.96	1.79	5.85	1.81	5.75	1.82
						0	7.30	1.80	7.13	1.83	6.98	1.85	6.91	1.86	6.84	1.87	6.72	1.89	6.62	1.91
						2	7.67	1.83	7.49	1.86	7.34	1.89	7.27	1.90	7.20	1.91	7.07	1.93	6.97	1.95
						7	8.40	1.90	8.22	1.92	8.05	1.95	8.00	1.96	7.91	1.97	7.78	2.00	7.66	2.01
						10	9.12	1.96	8.94	1.99	8.77	2.02	8.69	2.03	8.62	2.04	8.48	2.06	8.36	2.08
						15	10.04	2.04	9.84	2.07	9.67	2.10	9.58	2.11	9.51	2.12	9.36	2.15	9.23	2.17
2000	3500	5000		10500	154%	-15	4.58	1.55	4.44	1.57	4.31	1.59	4.25	1.60	4.20	1.61	4.10	1.63	4.02	1.64
						-10	5.49	1.63	5.33	1.66	5.20	1.68	5.14	1.69	5.08	1.70	4.97	1.71	4.89	1.73
						-5	6.39	1.71	6.23	1.74	6.09	1.76	6.02	1.77	5.96	1.78	5.85	1.80	5.75	1.81
						0	7.30	1.79	7.13	1.82	6.98	1.84	6.91	1.85	6.84	1.86	6.72	1.88	6.62	1.90
						2	7.67	1.82	7.49	1.85	7.34	1.88	7.27	1.89	7.20	1.90	7.07	1.92	6.97	1.94
						7	8.40	1.89	8.22	1.92	8.05	1.94	8.00	1.95	7.91	1.96	7.78	1.99	7.66	2.00
						10	9.12	1.95	8.94	1.98	8.77	2.01	8.69	2.02	8.62	2.03	8.48	2.05	8.36	2.07
						15	10.04	2.03	9.84	2.06	9.67	2.09	9.58	2.10	9.51	2.11	9.36	2.14	9.23	2.16
2500	2500	2500		7500	110%	-15	4.58	1.53	4.44	1.56	4.31	1.58	4.25	1.59	4.20	1.60	4.10	1.61	4.02	1.62
						-10	5.49	1.61	5.33	1.64	5.20	1.66	5.14	1.67	5.08	1.68	4.97	1.70	4.89	1.71
						-5	6.39	1.69	6.23	1.72	6.09	1.74	6.02	1.75	5.96	1.76	5.85	1.78	5.75	1.80
						0	7.30	1.77	7.13	1.80	6.98	1.82	6.91	1.83	6.84	1.85	6.72	1.86	6.62	1.88
						2	7.67	1.80	7.49	1.83	7.34	1.86	7.27	1.87	7.20	1.88	7.07	1.90	6.97	1.92
						7	8.40	1.87	8.22	1.90	8.05	1.92	8.00	1.93	7.91	1.94	7.78	1.96	7.66	1.98
						10	9.12	1.93	8.94	1.96	8.77	1.99	8.69	2.00	8.62	2.01	8.48	2.03	8.36	2.05
						15	10.04	2.01	9.84	2.04	9.67	2.07	9.58	2.08	9.51	2.09	9.36	2.11	9.23	2.13

12. Capacity Table

12-3. AJ068TXJ3KH/EA

HEATING

Combination (Capacity Index)				Combination (Total)	Combination (%)	Outdoor Temperature (°C,DB)	Indoor Temperature (°C, DB)													
							14		16		18		20		21		22		24	
							TC(kW)	PI(kW)	TC(kW)	PI(kW)	TC(kW)	PI(kW)	TC(kW)	PI(kW)	TC(kW)	PI(kW)	TC(kW)	PI(kW)	TC(kW)	PI(kW)
2500	2500	3500		8500	125%	-15	4.58	1.52	4.44	1.54	4.31	1.56	4.25	1.57	4.20	1.58	4.10	1.59	4.02	1.61
						-10	5.49	1.60	5.33	1.62	5.20	1.64	5.14	1.65	5.08	1.66	4.97	1.68	4.89	1.69
						-5	6.39	1.68	6.23	1.70	6.09	1.72	6.02	1.73	5.96	1.74	5.85	1.76	5.75	1.78
						0	7.30	1.76	7.13	1.78	6.98	1.80	6.91	1.82	6.84	1.83	6.72	1.85	6.62	1.86
						2	7.67	1.79	7.49	1.81	7.34	1.84	7.27	1.85	7.20	1.86	7.07	1.88	6.97	1.90
						7	8.40	1.85	8.22	1.88	8.05	1.90	8.00	1.91	7.91	1.92	7.78	1.94	7.66	1.96
						10	9.12	1.91	8.94	1.94	8.77	1.96	8.69	1.98	8.62	1.99	8.48	2.01	8.36	2.03
						15	10.04	1.99	9.84	2.02	9.67	2.04	9.58	2.06	9.51	2.07	9.36	2.09	9.23	2.11
2500	2500	5000		10000	147%	-15	4.58	1.55	4.44	1.57	4.31	1.59	4.25	1.60	4.20	1.61	4.10	1.63	4.02	1.64
						-10	5.49	1.63	5.33	1.66	5.20	1.68	5.14	1.69	5.08	1.70	4.97	1.71	4.89	1.73
						-5	6.39	1.71	6.23	1.74	6.09	1.76	6.02	1.77	5.96	1.78	5.85	1.80	5.75	1.81
						0	7.30	1.79	7.13	1.82	6.98	1.84	6.91	1.85	6.84	1.86	6.72	1.88	6.62	1.90
						2	7.67	1.82	7.49	1.85	7.34	1.88	7.27	1.89	7.20	1.90	7.07	1.92	6.97	1.94
						7	8.40	1.89	8.22	1.92	8.05	1.94	8.00	1.95	7.91	1.96	7.78	1.99	7.66	2.00
						10	9.12	1.95	8.94	1.98	8.77	2.01	8.69	2.02	8.62	2.03	8.48	2.05	8.36	2.07
						15	10.04	2.03	9.84	2.06	9.67	2.09	9.58	2.10	9.51	2.11	9.36	2.14	9.23	2.16
2500	3500	3500		9500	140%	-15	4.58	1.53	4.44	1.56	4.31	1.58	4.25	1.59	4.20	1.60	4.10	1.61	4.02	1.62
						-10	5.49	1.61	5.33	1.64	5.20	1.66	5.14	1.67	5.08	1.68	4.97	1.70	4.89	1.71
						-5	6.39	1.69	6.23	1.72	6.09	1.74	6.02	1.75	5.96	1.76	5.85	1.78	5.75	1.80
						0	7.30	1.77	7.13	1.80	6.98	1.82	6.91	1.83	6.84	1.85	6.72	1.86	6.62	1.88
						2	7.67	1.80	7.49	1.83	7.34	1.86	7.27	1.87	7.20	1.88	7.07	1.90	6.97	1.92
						7	8.40	1.87	8.22	1.90	8.05	1.92	8.00	1.93	7.91	1.94	7.78	1.96	7.66	1.98
						10	9.12	1.93	8.94	1.96	8.77	1.99	8.69	2.00	8.62	2.01	8.48	2.03	8.36	2.05
						15	10.04	2.01	9.84	2.04	9.67	2.07	9.58	2.08	9.51	2.09	9.36	2.11	9.23	2.13
2500	3500	5000		11000	162%	-15	4.58	1.57	4.44	1.60	4.31	1.62	4.25	1.63	4.20	1.64	4.10	1.65	4.02	1.67
						-10	5.49	1.66	5.33	1.68	5.20	1.70	5.14	1.71	5.08	1.72	4.97	1.74	4.89	1.75
						-5	6.39	1.74	6.23	1.76	6.09	1.79	6.02	1.80	5.96	1.81	5.85	1.83	5.75	1.84
						0	7.30	1.82	7.13	1.85	6.98	1.87	6.91	1.88	6.84	1.89	6.72	1.91	6.62	1.93
						2	7.67	1.85	7.49	1.88	7.34	1.90	7.27	1.92	7.20	1.93	7.07	1.95	6.97	1.96
						7	8.40	1.92	8.22	1.94	8.05	1.97	8.00	1.98	7.91	1.99	7.78	2.02	7.66	2.03
						10	9.12	1.98	8.94	2.01	8.77	2.04	8.69	2.05	8.62	2.06	8.48	2.08	8.36	2.10
						15	10.04	2.06	9.84	2.09	9.67	2.12	9.58	2.13	9.51	2.14	9.36	2.17	9.23	2.19
3500	3500	3500		10500	154%	-15	4.58	1.52	4.44	1.54	4.31	1.56	4.25	1.57	4.20	1.58	4.10	1.59	4.02	1.61
						-10	5.49	1.60	5.33	1.62	5.20	1.64	5.14	1.65	5.08	1.66	4.97	1.68	4.89	1.69
						-5	6.39	1.68	6.23	1.70	6.09	1.72	6.02	1.73	5.96	1.74	5.85	1.76	5.75	1.78
						0	7.30	1.76	7.13	1.78	6.98	1.80	6.91	1.82	6.84	1.83	6.72	1.85	6.62	1.86
						2	7.67	1.79	7.49	1.81	7.34	1.84	7.27	1.85	7.20	1.86	7.07	1.88	6.97	1.90
						7	8.40	1.85	8.22	1.88	8.05	1.90	8.00	1.91	7.91	1.92	7.78	1.94	7.66	1.96
						10	9.12	1.91	8.94	1.94	8.77	1.96	8.69	1.98	8.62	1.99	8.48	2.01	8.36	2.03
						15	10.04	1.99	9.84	2.02	9.67	2.04	9.58	2.06	9.51	2.07	9.36	2.09	9.23	2.11

NOTE

1 Cooling capacity is based on 27°CDB / 19°CWB (indoor temperature), 35°CDB (outdoor temperature).

2 Heating capacity is based on 20°CDB (indoor temperature), 7°CDB/6°CWB (outdoor temperature).

3 The above is the value for connecting with the following indoor units.
- AJ***TNAPKH : Premium Wind Free

4 Capacities are based on the following conditions:
- Corresponding refrigerant piping length : 5m / - Level difference : 0m

5 The total ability of connected a indoor unit is up to 8.5kW

6 It is impossible to connect the indoor unit for one room only.

7 This data is reference data for temperature capacity trend.

12. Capacity Table

12-4. AJ080TXJ4KH/EA

COOLING

Combination (Capacity Index)				Combination (Total)	Combination (%)	Outdoor Temperature (°C,DB)	Indoor Temperature (°C, WB)													
							14		16		18		19		20		22		24	
							TC(kW)	PI(kW)	TC(kW)	PI(kW)	TC(kW)	PI(kW)	TC(kW)	PI(kW)	TC(kW)	PI(kW)	TC(kW)	PI(kW)	TC(kW)	PI(kW)
						10	1.60	0.56	2.32	0.62	2.42	0.68	2.46	0.70	2.51	0.72	2.61	0.76	2.71	0.79
						12	1.60	0.59	2.28	0.65	2.38	0.70	2.43	0.72	2.48	0.74	2.57	0.78	2.67	0.80
						14	1.60	0.61	2.24	0.67	2.34	0.72	2.39	0.74	2.44	0.76	2.53	0.79	2.63	0.82
						16	1.60	0.64	2.21	0.70	2.30	0.74	2.35	0.76	2.40	0.78	2.50	0.81	2.59	0.83
						18	1.60	0.67	2.17	0.72	2.27	0.77	2.31	0.79	2.36	0.80	2.46	0.83	2.55	0.85
						20	1.60	0.69	2.13	0.75	2.23	0.79	2.28	0.81	2.32	0.82	2.42	0.85	2.52	0.86
						21	1.60	0.71	2.12	0.76	2.21	0.80	2.26	0.82	2.30	0.83	2.40	0.86	2.50	0.87
						23	1.60	0.73	2.08	0.78	2.17	0.82	2.22	0.84	2.27	0.85	2.36	0.88	2.46	0.89
						25	1.60	0.76	2.04	0.81	2.14	0.85	2.18	0.86	2.23	0.88	2.32	0.90	2.42	0.91
2000				2000	25%	27	1.60	0.79	2.01	0.84	2.10	0.87	2.15	0.89	2.19	0.90	2.29	0.92	2.38	0.93
						29	1.60	0.82	1.97	0.86	2.06	0.90	2.11	0.91	2.16	0.92	2.25	0.94	2.34	0.94
						31	1.60	0.85	1.94	0.89	2.03	0.92	2.07	0.93	2.12	0.94	2.21	0.96	2.30	0.96
						33	1.60	0.88	1.90	0.92	1.99	0.95	2.04	0.96	2.08	0.97	2.17	0.98	2.27	0.98
						35	1.60	0.91	1.86	0.94	1.95	0.97	2.00	0.97	2.04	0.99	2.14	1.00	2.23	1.00
						37	1.60	0.94	1.83	0.97	1.92	1.00	1.96	1.01	2.01	1.02	2.10	1.02	2.19	1.02
						39	1.60	0.97	1.79	1.00	1.88	1.03	1.93	1.03	1.97	1.04	2.06	1.05	2.15	1.04
						42	1.58	1.02	1.74	1.05	1.83	1.07	1.87	1.07	1.92	1.08	2.01	1.08	2.10	1.07
						44	1.50	1.05	1.71	1.08	1.79	1.09	1.84	1.10	1.88	1.10	1.97	1.10	2.06	1.09
						46	1.46	1.08	1.67	1.11	1.76	1.12	1.80	1.13	1.84	1.13	1.93	1.13	2.02	1.12
						10	2.00	0.68	2.90	0.76	3.02	0.83	3.08	0.85	3.14	0.88	3.26	0.92	3.39	0.96
						12	2.00	0.71	2.85	0.79	2.97	0.85	3.03	0.88	3.09	0.90	3.22	0.94	3.34	0.97
						14	2.00	0.75	2.80	0.82	2.93	0.88	2.99	0.90	3.05	0.93	3.17	0.97	3.29	0.99
						16	2.00	0.78	2.76	0.85	2.88	0.90	2.94	0.93	3.00	0.95	3.12	0.99	3.24	1.01
						18	2.00	0.81	2.71	0.88	2.83	0.93	2.89	0.96	2.95	0.98	3.07	1.01	3.19	1.03
						20	2.00	0.84	2.67	0.91	2.79	0.96	2.85	0.98	2.90	1.00	3.02	1.03	3.14	1.05
						21	2.00	0.86	2.64	0.92	2.76	0.97	2.82	1.00	2.88	1.01	3.00	1.04	3.12	1.06
						23	2.00	0.89	2.60	0.95	2.72	1.00	2.78	1.02	2.83	1.04	2.95	1.07	3.07	1.08
						25	2.00	0.93	2.55	0.98	2.67	1.03	2.73	1.05	2.79	1.07	2.91	1.09	3.02	1.10
2500				2500	31%	27	2.00	0.96	2.51	1.02	2.62	1.06	2.68	1.08	2.74	1.09	2.86	1.12	2.98	1.13
						29	2.00	1.00	2.46	1.05	2.58	1.09	2.64	1.11	2.69	1.12	2.81	1.14	2.93	1.15
						31	2.00	1.03	2.42	1.08	2.53	1.12	2.59	1.14	2.65	1.15	2.76	1.17	2.88	1.17
						33	2.00	1.07	2.37	1.12	2.49	1.15	2.54	1.17	2.60	1.18	2.72	1.19	2.83	1.19
						35	2.00	1.10	2.33	1.15	2.44	1.18	2.50	1.18	2.56	1.21	2.67	1.22	2.78	1.22
						37	2.00	1.14	2.29	1.18	2.40	1.22	2.45	1.23	2.51	1.24	2.62	1.24	2.74	1.24
						39	2.00	1.18	2.24	1.22	2.35	1.25	2.41	1.26	2.46	1.27	2.58	1.27	2.69	1.27
						42	1.98	1.24	2.18	1.27	2.29	1.30	2.34	1.31	2.40	1.31	2.51	1.31	2.62	1.30
						44	1.88	1.27	2.13	1.31	2.24	1.33	2.30	1.34	2.35	1.34	2.46	1.34	2.57	1.33
						46	1.83	1.31	2.09	1.34	2.20	1.36	2.25	1.37	2.30	1.37	2.41	1.37	2.53	1.36

12. Capacity Table

12-4. AJ080TXJ4KH/EA

COOLING

Combination (Capacity Index)				Combination (Total)	Combination (%)	Outdoor Temperature (°C,DB)	Indoor Temperature (°C, WB)													
							14		16		18		19		20		22		24	
							TC(kW)	PI(kW)	TC(kW)	PI(kW)	TC(kW)	PI(kW)	TC(kW)	PI(kW)	TC(kW)	PI(kW)	TC(kW)	PI(kW)	TC(kW)	PI(kW)
3500				3500	44%	10	2.80	0.85	4.06	0.95	4.23	1.03	4.31	1.06	4.40	1.10	4.57	1.15	4.74	1.19
						12	2.80	0.89	3.99	0.98	4.16	1.06	4.25	1.09	4.33	1.13	4.50	1.18	4.68	1.21
						14	2.80	0.93	3.93	1.02	4.10	1.09	4.18	1.13	4.26	1.16	4.44	1.20	4.61	1.24
						16	2.80	0.97	3.86	1.05	4.03	1.13	4.11	1.16	4.20	1.19	4.37	1.23	4.54	1.26
						18	2.80	1.01	3.80	1.09	3.96	1.16	4.05	1.19	4.13	1.22	4.30	1.26	4.47	1.28
						20	2.80	1.05	3.73	1.13	3.90	1.20	3.98	1.22	4.07	1.25	4.23	1.29	4.40	1.31
						21	2.80	1.07	3.70	1.15	3.87	1.21	3.95	1.24	4.03	1.26	4.20	1.30	4.37	1.32
						23	2.80	1.11	3.64	1.19	3.80	1.25	3.89	1.27	3.97	1.30	4.13	1.33	4.30	1.35
						25	2.80	1.15	3.58	1.23	3.74	1.28	3.82	1.31	3.90	1.33	4.07	1.36	4.23	1.37
						27	2.80	1.20	3.51	1.27	3.67	1.32	3.76	1.34	3.84	1.36	4.00	1.39	4.17	1.40
						29	2.80	1.24	3.45	1.31	3.61	1.36	3.69	1.38	3.77	1.40	3.93	1.42	4.10	1.43
						31	2.80	1.29	3.39	1.35	3.55	1.40	3.63	1.42	3.71	1.43	3.87	1.45	4.03	1.46
						33	2.80	1.33	3.32	1.39	3.48	1.43	3.56	1.45	3.64	1.47	3.80	1.48	3.97	1.49
						35	2.80	1.38	3.26	1.43	3.42	1.47	3.50	1.47	3.58	1.50	3.74	1.52	3.90	1.52
						37	2.80	1.42	3.20	1.47	3.36	1.51	3.43	1.53	3.51	1.54	3.67	1.55	3.83	1.55
						39	2.80	1.47	3.14	1.52	3.29	1.55	3.37	1.57	3.45	1.58	3.61	1.58	3.77	1.58
						42	2.77	1.54	3.05	1.58	3.20	1.62	3.28	1.63	3.35	1.63	3.51	1.64	3.67	1.63
						44	2.63	1.59	2.98	1.63	3.14	1.66	3.21	1.67	3.29	1.67	3.45	1.67	3.60	1.66
						46	2.56	1.64	2.92	1.68	3.07	1.70	3.15	1.71	3.23	1.71	3.38	1.71	3.54	1.69
5000				5000	63%	10	4.00	1.23	5.79	1.37	6.04	1.48	6.16	1.54	6.28	1.58	6.53	1.66	6.78	1.72
						12	4.00	1.28	5.70	1.42	5.94	1.53	6.07	1.58	6.19	1.62	6.43	1.70	6.68	1.75
						14	4.00	1.34	5.61	1.47	5.85	1.58	5.97	1.62	6.09	1.67	6.34	1.73	6.58	1.78
						16	4.00	1.40	5.52	1.52	5.76	1.63	5.88	1.67	6.00	1.71	6.24	1.77	6.48	1.82
						18	4.00	1.45	5.43	1.57	5.66	1.67	5.78	1.72	5.90	1.75	6.14	1.81	6.39	1.85
						20	4.00	1.51	5.34	1.63	5.57	1.72	5.69	1.76	5.81	1.80	6.05	1.85	6.29	1.89
						21	4.00	1.54	5.29	1.66	5.53	1.75	5.64	1.79	5.76	1.82	6.00	1.87	6.24	1.91
						23	4.00	1.60	5.20	1.71	5.43	1.80	5.55	1.84	5.67	1.87	5.91	1.92	6.14	1.94
						25	4.00	1.66	5.11	1.77	5.34	1.85	5.46	1.89	5.57	1.92	5.81	1.96	6.05	1.98
						27	4.00	1.73	5.02	1.83	5.25	1.91	5.37	1.94	5.48	1.96	5.72	2.00	5.95	2.02
						29	4.00	1.79	4.93	1.88	5.16	1.96	5.27	1.99	5.39	2.01	5.62	2.05	5.86	2.06
						31	4.00	1.85	4.84	1.94	5.07	2.01	5.18	2.04	5.30	2.06	5.53	2.09	5.76	2.10
						33	4.00	1.92	4.75	2.00	4.98	2.07	5.09	2.09	5.20	2.11	5.43	2.14	5.66	2.14
						35	4.00	1.98	4.66	2.06	4.89	2.13	5.00	2.12	5.11	2.17	5.34	2.19	5.57	2.19
						37	4.00	2.05	4.57	2.13	4.79	2.18	4.91	2.20	5.02	2.22	5.25	2.24	5.47	2.23
						39	4.00	2.12	4.48	2.19	4.70	2.24	4.82	2.26	4.93	2.27	5.15	2.28	5.38	2.28
						42	3.95	2.22	4.35	2.29	4.57	2.33	4.68	2.35	4.79	2.35	5.01	2.36	5.24	2.34
						44	3.75	2.29	4.26	2.35	4.48	2.39	4.59	2.40	4.70	2.41	4.92	2.41	5.14	2.39
						46	3.65	2.36	4.18	2.42	4.39	2.45	4.50	2.46	4.61	2.47	4.83	2.46	5.05	2.44

12. Capacity Table

12-4. AJ080TXJ4KH/EA

COOLING

Combination (Capacity Index)				Combination (Total)	Combination (%)	Outdoor Temperature (°C,DB)	Indoor Temperature (°C, WB)													
							14		16		18		19		20		22		24	
							TC(kW)	PI(kW)	TC(kW)	PI(kW)	TC(kW)	PI(kW)	TC(kW)	PI(kW)	TC(kW)	PI(kW)	TC(kW)	PI(kW)	TC(kW)	PI(kW)
						10	4.96	1.23	7.18	1.28	7.49	1.39	7.64	1.44	7.79	1.48	8.10	1.56	8.40	1.61
						12	4.96	1.28	7.07	1.33	7.37	1.44	7.52	1.48	7.67	1.52	7.98	1.59	8.28	1.64
						14	4.96	1.34	6.96	1.38	7.25	1.48	7.40	1.52	7.55	1.56	7.86	1.63	8.16	1.67
						16	4.96	1.40	6.84	1.43	7.14	1.53	7.29	1.57	7.44	1.60	7.74	1.66	8.04	1.71
						18	4.96	1.45	6.73	1.48	7.02	1.57	7.17	1.61	7.32	1.65	7.62	1.70	7.92	1.74
						20	4.96	1.51	6.62	1.53	6.91	1.62	7.06	1.66	7.20	1.69	7.50	1.74	7.80	1.77
						21	4.96	1.54	6.56	1.55	6.85	1.64	7.00	1.68	7.15	1.71	7.44	1.76	7.74	1.79
						23	4.96	1.60	6.45	1.61	6.74	1.69	6.88	1.72	7.03	1.75	7.32	1.80	7.62	1.83
						25	4.96	1.66	6.33	1.66	6.62	1.74	6.77	1.77	6.91	1.80	7.20	1.84	7.50	1.86
6800				6800	85%	27	4.96	1.73	6.22	1.71	6.51	1.79	6.65	1.82	6.80	1.84	7.09	1.88	7.38	1.90
						29	4.96	1.79	6.11	1.77	6.40	1.84	6.54	1.87	6.68	1.89	6.97	1.92	7.26	1.94
						31	4.96	1.85	6.00	1.82	6.28	1.89	6.42	1.92	6.57	1.94	6.85	1.97	7.14	1.97
						33	4.96	1.92	5.89	1.88	6.17	1.94	6.31	1.97	6.45	1.98	6.74	2.01	7.02	2.01
						35	4.96	1.98	5.78	1.94	6.06	2.00	6.20	1.99	6.34	2.03	6.62	2.05	6.91	2.05
						37	4.96	2.05	5.67	2.00	5.95	2.05	6.08	2.07	6.22	2.08	6.51	2.10	6.79	2.09
						39	4.96	2.12	5.56	2.06	5.83	2.10	5.97	2.12	6.11	2.13	6.39	2.14	6.67	2.14
						42	4.90	2.22	5.39	2.15	5.67	2.19	5.80	2.20	5.94	2.21	6.22	2.21	6.50	2.20
						44	4.65	2.29	5.29	2.21	5.56	2.24	5.69	2.26	5.83	2.26	6.10	2.26	6.38	2.24
						46	4.53	2.36	5.18	2.27	5.45	2.30	5.58	2.31	5.72	2.32	5.99	2.31	6.26	2.29
						10	3.53	0.87	4.99	0.89	5.08	0.91	5.14	0.92	5.20	0.94	5.35	0.95	5.52	0.97
						12	3.53	0.89	4.85	0.91	4.95	0.94	5.01	0.95	5.08	0.96	5.23	0.98	5.41	1.00
						14	3.53	0.92	4.72	0.94	4.83	0.96	4.89	0.97	4.96	0.98	5.12	1.00	5.31	1.02
						16	3.53	0.94	4.60	0.96	4.71	0.98	4.78	0.99	4.85	1.00	5.02	1.02	5.21	1.04
						18	3.53	0.96	4.48	0.98	4.60	1.01	4.67	1.02	4.75	1.03	4.92	1.04	5.12	1.06
						20	3.53	0.99	4.36	1.01	4.49	1.03	4.57	1.04	4.65	1.05	4.83	1.07	5.03	1.09
						21	3.53	1.00	4.31	1.02	4.44	1.04	4.52	1.05	4.60	1.06	4.78	1.08	4.99	1.10
						23	3.53	1.03	4.20	1.05	4.34	1.07	4.42	1.08	4.51	1.09	4.70	1.11	4.91	1.13
						25	3.53	1.05	4.10	1.07	4.25	1.09	4.33	1.10	4.42	1.11	4.62	1.13	4.84	1.15
2000	2000			4000	50%	27	3.53	1.08	4.01	1.10	4.16	1.12	4.25	1.13	4.34	1.14	4.55	1.16	4.78	1.18
						29	3.53	1.11	3.92	1.13	4.08	1.15	4.17	1.16	4.27	1.17	4.48	1.19	4.72	1.20
						31	3.53	1.13	3.84	1.15	4.01	1.18	4.10	1.19	4.20	1.19	4.42	1.21	4.66	1.23
						33	3.53	1.16	3.76	1.18	3.94	1.20	4.03	1.21	4.13	1.22	4.36	1.24	4.61	1.26
						35	3.53	1.19	3.69	1.21	3.87	1.23	4.00	1.24	4.08	1.25	4.31	1.27	4.57	1.29
						37	3.53	1.22	3.62	1.24	3.81	1.26	3.91	1.27	4.02	1.28	4.26	1.30	4.53	1.32
						39	3.53	1.25	3.56	1.27	3.76	1.29	3.86	1.30	3.98	1.31	4.22	1.33	4.49	1.35
						42	3.53	1.30	3.48	1.32	3.69	1.34	3.80	1.35	3.92	1.36	4.17	1.38	4.46	1.40
						44	3.53	1.33	3.44	1.35	3.65	1.37	3.76	1.38	3.89	1.39	4.15	1.41	4.44	1.43
						46	3.53	1.37	3.39	1.39	3.61	1.41	3.73	1.42	3.86	1.43	4.13	1.44	4.42	1.46

12. Capacity Table

12-4. AJ080TXJ4KH/EA

COOLING

Combination (Capacity Index)				Combination (Total)	Combination (%)	Outdoor Temperature (°C,DB)	Indoor Temperature (°C, WB)													
							14		16		18		19		20		22		24	
							TC(kW)	PI(kW)	TC(kW)	PI(kW)	TC(kW)	PI(kW)	TC(kW)	PI(kW)	TC(kW)	PI(kW)	TC(kW)	PI(kW)	TC(kW)	PI(kW)
2000	2500			4500	56%	10	4.07	1.00	5.73	1.03	5.84	1.05	5.91	1.07	5.98	1.08	6.15	1.10	6.34	1.12
						12	4.07	1.03	5.58	1.06	5.69	1.08	5.76	1.09	5.84	1.10	6.02	1.13	6.22	1.15
						14	4.07	1.06	5.43	1.08	5.55	1.11	5.63	1.12	5.71	1.13	5.89	1.15	6.10	1.17
						16	4.07	1.08	5.29	1.11	5.42	1.13	5.50	1.14	5.58	1.16	5.77	1.18	5.99	1.20
						18	4.07	1.11	5.15	1.14	5.29	1.16	5.37	1.17	5.46	1.18	5.66	1.21	5.89	1.23
						20	4.07	1.14	5.02	1.16	5.17	1.19	5.25	1.20	5.34	1.21	5.55	1.23	5.79	1.25
						21	4.07	1.15	4.96	1.18	5.11	1.20	5.19	1.21	5.29	1.22	5.50	1.25	5.74	1.27
						23	4.07	1.18	4.83	1.21	4.99	1.23	5.09	1.24	5.18	1.25	5.40	1.28	5.65	1.30
						25	4.07	1.21	4.72	1.24	4.89	1.26	4.98	1.27	5.09	1.28	5.31	1.31	5.57	1.33
						27	4.07	1.24	4.61	1.27	4.79	1.29	4.89	1.30	4.99	1.31	5.23	1.34	5.49	1.36
						29	4.07	1.27	4.51	1.30	4.69	1.32	4.80	1.33	4.91	1.35	5.15	1.37	5.42	1.39
						31	4.07	1.31	4.42	1.33	4.61	1.36	4.71	1.37	4.83	1.38	5.08	1.40	5.36	1.42
						33	4.07	1.34	4.33	1.36	4.53	1.39	4.64	1.40	4.76	1.41	5.01	1.43	5.30	1.45
						35	4.07	1.37	4.24	1.40	4.45	1.42	4.60	1.43	4.69	1.44	4.96	1.47	5.25	1.49
						37	4.07	1.41	4.17	1.43	4.38	1.46	4.50	1.47	4.63	1.48	4.90	1.50	5.21	1.52
						39	4.07	1.44	4.10	1.47	4.32	1.49	4.44	1.50	4.57	1.51	4.86	1.54	5.17	1.56
						42	4.07	1.50	4.01	1.52	4.24	1.55	4.37	1.56	4.51	1.57	4.80	1.59	5.12	1.61
						44	4.07	1.54	3.95	1.56	4.20	1.58	4.33	1.59	4.47	1.61	4.77	1.63	5.10	1.65
						46	4.07	1.57	3.90	1.60	4.16	1.62	4.29	1.63	4.44	1.64	4.75	1.66	5.09	1.68
2000	3500			5500	69%	10	4.86	1.20	6.86	1.23	6.99	1.26	7.06	1.28	7.15	1.29	7.35	1.32	7.59	1.34
						12	4.86	1.23	6.67	1.26	6.81	1.29	6.89	1.31	6.98	1.32	7.19	1.35	7.44	1.37
						14	4.86	1.26	6.49	1.29	6.64	1.32	6.73	1.34	6.82	1.35	7.04	1.38	7.30	1.40
						16	4.86	1.29	6.32	1.32	6.48	1.35	6.57	1.37	6.67	1.38	6.90	1.41	7.16	1.43
						18	4.86	1.33	6.16	1.36	6.32	1.39	6.42	1.40	6.53	1.41	6.76	1.44	7.04	1.47
						20	4.86	1.36	6.00	1.39	6.18	1.42	6.28	1.43	6.39	1.45	6.64	1.47	6.92	1.50
						21	4.86	1.38	5.92	1.41	6.11	1.44	6.21	1.45	6.32	1.46	6.58	1.49	6.86	1.52
						23	4.86	1.41	5.78	1.44	5.97	1.47	6.08	1.49	6.20	1.50	6.46	1.53	6.76	1.55
						25	4.86	1.45	5.64	1.48	5.84	1.51	5.96	1.52	6.08	1.54	6.35	1.56	6.66	1.59
						27	4.86	1.49	5.51	1.52	5.72	1.54	5.84	1.56	5.97	1.57	6.25	1.60	6.57	1.62
						29	4.86	1.52	5.39	1.55	5.61	1.58	5.74	1.60	5.87	1.61	6.16	1.64	6.48	1.66
						31	4.86	1.56	5.28	1.59	5.51	1.62	5.64	1.63	5.77	1.65	6.07	1.67	6.41	1.70
						33	4.86	1.60	5.17	1.63	5.41	1.66	5.54	1.67	5.69	1.69	5.99	1.71	6.34	1.74
						35	4.86	1.64	5.07	1.67	5.32	1.70	5.50	1.71	5.61	1.73	5.92	1.75	6.28	1.78
						37	4.86	1.69	4.98	1.71	5.24	1.74	5.38	1.76	5.53	1.77	5.86	1.79	6.23	1.82
						39	4.86	1.73	4.90	1.76	5.17	1.78	5.31	1.80	5.47	1.81	5.81	1.84	6.18	1.86
						42	4.86	1.79	4.79	1.82	5.07	1.85	5.22	1.86	5.39	1.88	5.74	1.90	6.13	1.93
						44	4.86	1.84	4.72	1.87	5.02	1.89	5.17	1.91	5.34	1.92	5.70	1.95	6.10	1.97
						46	4.86	1.88	4.67	1.91	4.97	1.94	5.13	1.95	5.30	1.97	5.68	1.99	6.08	2.01

12. Capacity Table

12-4. AJ080TXJ4KH/EA

COOLING

Combination (Capacity Index)				Combination (Total)	Combination (%)	Outdoor Temperature (°C,DB)	Indoor Temperature (°C, WB)													
							14		16		18		19		20		22		24	
							TC(kW)	PI(kW)	TC(kW)	PI(kW)	TC(kW)	PI(kW)	TC(kW)	PI(kW)	TC(kW)	PI(kW)	TC(kW)	PI(kW)	TC(kW)	PI(kW)
2000	5000			7000	88%	10	6.36	1.57	8.98	1.61	9.15	1.65	9.25	1.67	9.36	1.69	9.62	1.72	9.93	1.76
						12	6.36	1.61	8.73	1.65	8.91	1.69	9.02	1.71	9.14	1.73	9.42	1.76	9.74	1.80
						14	6.36	1.65	8.50	1.69	8.69	1.73	8.81	1.75	8.93	1.77	9.22	1.80	9.55	1.84
						16	6.36	1.70	8.27	1.74	8.48	1.77	8.60	1.79	8.73	1.81	9.03	1.85	9.38	1.88
						18	6.36	1.74	8.06	1.78	8.28	1.82	8.41	1.83	8.54	1.85	8.86	1.89	9.21	1.92
						20	6.36	1.78	7.85	1.82	8.09	1.86	8.22	1.88	8.36	1.90	8.69	1.93	9.06	1.97
						21	6.36	1.81	7.76	1.84	7.99	1.88	8.13	1.90	8.28	1.92	8.61	1.95	8.98	1.99
						23	6.36	1.85	7.57	1.89	7.82	1.93	7.96	1.95	8.11	1.96	8.46	2.00	8.85	2.03
						25	6.36	1.90	7.39	1.94	7.65	1.98	7.80	1.99	7.96	2.01	8.32	2.05	8.72	2.08
						27	6.36	1.95	7.22	1.99	7.49	2.02	7.65	2.04	7.82	2.06	8.18	2.09	8.60	2.13
						29	6.36	2.00	7.06	2.04	7.35	2.07	7.51	2.09	7.68	2.11	8.06	2.14	8.49	2.18
						31	6.36	2.05	6.91	2.09	7.21	2.12	7.38	2.14	7.56	2.16	7.95	2.19	8.39	2.23
						33	6.36	2.10	6.77	2.14	7.08	2.17	7.26	2.19	7.44	2.21	7.85	2.24	8.30	2.28
						35	6.36	2.15	6.64	2.19	6.97	2.23	7.20	2.24	7.34	2.26	7.76	2.30	8.22	2.33
						37	6.36	2.21	6.52	2.25	6.86	2.28	7.05	2.30	7.24	2.32	7.67	2.35	8.15	2.38
						39	6.36	2.26	6.41	2.30	6.76	2.34	6.96	2.35	7.16	2.37	7.60	2.41	8.09	2.44
						42	6.36	2.35	6.27	2.39	6.64	2.42	6.84	2.44	7.05	2.46	7.51	2.49	8.02	2.52
						44	6.36	2.41	6.18	2.44	6.57	2.48	6.77	2.50	6.99	2.52	7.47	2.55	7.99	2.58
						46	6.36	2.47	6.11	2.50	6.50	2.54	6.72	2.56	6.94	2.57	7.43	2.61	7.96	2.64
2000	6800			8800	110%	10	6.36	1.57	9.29	1.69	9.46	1.73	9.57	1.75	9.69	1.77	9.96	1.81	10.28	1.85
						12	6.36	1.61	9.03	1.73	9.22	1.77	9.34	1.79	9.46	1.81	9.74	1.85	10.07	1.89
						14	6.36	1.65	8.79	1.78	8.99	1.82	9.11	1.84	9.24	1.86	9.54	1.89	9.88	1.93
						16	6.36	1.70	8.56	1.82	8.77	1.86	8.90	1.88	9.04	1.90	9.35	1.94	9.70	1.97
						18	6.36	1.74	8.34	1.87	8.57	1.91	8.70	1.92	8.84	1.94	9.16	1.98	9.53	2.02
						20	6.36	1.78	8.13	1.91	8.37	1.95	8.51	1.97	8.66	1.99	8.99	2.03	9.37	2.06
						21	6.36	1.81	8.03	1.94	8.27	1.97	8.41	1.99	8.57	2.01	8.91	2.05	9.30	2.08
						23	6.36	1.85	7.83	1.98	8.09	2.02	8.24	2.04	8.40	2.06	8.75	2.10	9.15	2.13
						25	6.36	1.90	7.64	2.03	7.92	2.07	8.07	2.09	8.24	2.11	8.60	2.15	9.02	2.18
						27	6.36	1.95	7.47	2.08	7.75	2.12	7.91	2.14	8.09	2.16	8.47	2.20	8.90	2.23
						29	6.36	2.00	7.30	2.14	7.60	2.17	7.77	2.19	7.95	2.21	8.34	2.25	8.78	2.28
						31	6.36	2.05	7.15	2.19	7.46	2.23	7.63	2.25	7.82	2.26	8.23	2.30	8.68	2.34
						33	6.36	2.10	7.01	2.24	7.33	2.28	7.51	2.30	7.70	2.32	8.12	2.35	8.59	2.39
						35	6.36	2.15	6.87	2.30	7.21	2.34	7.45	2.35	7.59	2.37	8.02	2.41	8.50	2.44
						37	6.36	2.21	6.75	2.36	7.10	2.39	7.29	2.41	7.50	2.43	7.94	2.47	8.43	2.50
						39	6.36	2.26	6.64	2.41	7.00	2.45	7.20	2.47	7.41	2.49	7.87	2.52	8.37	2.56
						42	6.36	2.35	6.49	2.50	6.87	2.54	7.08	2.56	7.30	2.58	7.77	2.61	8.30	2.65
						44	6.36	2.41	6.40	2.56	6.79	2.60	7.01	2.62	7.24	2.64	7.73	2.67	8.26	2.71
						46	6.36	2.47	6.32	2.63	6.73	2.66	6.95	2.68	7.19	2.70	7.69	2.74	8.24	2.77

12. Capacity Table

12-4. AJ080TXJ4KH/EA

COOLING

Combination (Capacity Index)				Combination (Total)	Combination (%)	Outdoor Temperature (°C,DB)	Indoor Temperature (°C, WB)													
							14		16		18		19		20		22		24	
							TC(kW)	PI(kW)	TC(kW)	PI(kW)	TC(kW)	PI(kW)	TC(kW)	PI(kW)	TC(kW)	PI(kW)	TC(kW)	PI(kW)	TC(kW)	PI(kW)
2500	2500			5000	63%	10	4.60	1.17	6.48	1.20	6.61	1.22	6.68	1.24	6.76	1.25	6.95	1.28	7.17	1.30
						12	4.60	1.20	6.31	1.22	6.44	1.25	6.52	1.27	6.60	1.28	6.80	1.31	7.03	1.33
						14	4.60	1.23	6.14	1.25	6.28	1.28	6.36	1.30	6.45	1.31	6.66	1.34	6.90	1.36
						16	4.60	1.26	5.97	1.29	6.12	1.31	6.21	1.33	6.31	1.34	6.52	1.37	6.77	1.39
						18	4.60	1.29	5.82	1.32	5.98	1.35	6.07	1.36	6.17	1.37	6.40	1.40	6.65	1.42
						20	4.60	1.32	5.67	1.35	5.84	1.38	5.94	1.39	6.04	1.41	6.28	1.43	6.54	1.46
						21	4.60	1.34	5.60	1.37	5.77	1.39	5.87	1.41	5.98	1.42	6.22	1.45	6.49	1.47
						23	4.60	1.37	5.47	1.40	5.65	1.43	5.75	1.44	5.86	1.46	6.11	1.48	6.39	1.51
						25	4.60	1.41	5.34	1.44	5.53	1.46	5.63	1.48	5.75	1.49	6.01	1.52	6.29	1.54
						27	4.60	1.44	5.21	1.47	5.41	1.50	5.52	1.51	5.64	1.53	5.91	1.55	6.21	1.58
						29	4.60	1.48	5.10	1.51	5.31	1.54	5.42	1.55	5.55	1.56	5.82	1.59	6.13	1.61
						31	4.60	1.52	4.99	1.55	5.21	1.57	5.33	1.59	5.46	1.60	5.74	1.63	6.06	1.65
						33	4.60	1.56	4.89	1.58	5.12	1.61	5.24	1.62	5.38	1.64	5.67	1.66	5.99	1.69
						35	4.60	1.60	4.80	1.62	5.03	1.65	5.20	1.66	5.30	1.68	5.60	1.70	5.94	1.73
						37	4.60	1.64	4.71	1.66	4.95	1.69	5.09	1.70	5.23	1.72	5.54	1.74	5.89	1.77
						39	4.60	1.68	4.63	1.71	4.89	1.73	5.02	1.74	5.17	1.76	5.49	1.78	5.84	1.81
						42	4.60	1.74	4.53	1.77	4.79	1.80	4.94	1.81	5.09	1.82	5.43	1.85	5.79	1.87
						44	4.60	1.78	4.47	1.81	4.74	1.84	4.89	1.85	5.05	1.86	5.39	1.89	5.77	1.91
						46	4.60	1.83	4.41	1.86	4.70	1.88	4.85	1.90	5.02	1.91	5.37	1.93	5.75	1.96
2500	3500			6000	75%	10	5.39	1.33	7.60	1.37	7.75	1.40	7.83	1.42	7.93	1.43	8.15	1.46	8.41	1.49
						12	5.39	1.37	7.40	1.40	7.55	1.43	7.64	1.45	7.75	1.47	7.98	1.50	8.25	1.53
						14	5.39	1.40	7.20	1.44	7.36	1.47	7.46	1.48	7.57	1.50	7.81	1.53	8.09	1.56
						16	5.39	1.44	7.01	1.47	7.18	1.50	7.29	1.52	7.40	1.54	7.65	1.57	7.94	1.59
						18	5.39	1.47	6.83	1.51	7.01	1.54	7.12	1.56	7.24	1.57	7.50	1.60	7.81	1.63
						20	5.39	1.51	6.65	1.55	6.85	1.58	6.96	1.59	7.09	1.61	7.36	1.64	7.67	1.67
						21	5.39	1.53	6.57	1.56	6.77	1.60	6.89	1.61	7.01	1.63	7.29	1.66	7.61	1.69
						23	5.39	1.57	6.41	1.60	6.62	1.64	6.74	1.65	6.87	1.67	7.16	1.70	7.49	1.72
						25	5.39	1.61	6.26	1.64	6.48	1.68	6.61	1.69	6.74	1.71	7.04	1.74	7.38	1.76
						27	5.39	1.65	6.12	1.68	6.35	1.72	6.48	1.73	6.62	1.75	6.93	1.78	7.28	1.80
						29	5.39	1.69	5.98	1.73	6.22	1.76	6.36	1.77	6.51	1.79	6.83	1.82	7.19	1.85
						31	5.39	1.74	5.85	1.77	6.11	1.80	6.25	1.82	6.40	1.83	6.73	1.86	7.11	1.89
						33	5.39	1.78	5.74	1.81	6.00	1.84	6.15	1.86	6.31	1.87	6.65	1.90	7.03	1.93
						35	5.39	1.83	5.63	1.86	5.90	1.89	6.10	1.90	6.22	1.92	6.57	1.95	6.96	1.98
						37	5.39	1.87	5.53	1.90	5.81	1.94	5.97	1.95	6.14	1.97	6.50	1.99	6.90	2.02
						39	5.39	1.92	5.43	1.95	5.73	1.98	5.89	2.00	6.07	2.01	6.44	2.04	6.85	2.07
						42	5.39	1.99	5.31	2.02	5.62	2.05	5.79	2.07	5.97	2.08	6.37	2.11	6.79	2.14
						44	5.39	2.04	5.24	2.07	5.56	2.10	5.74	2.12	5.92	2.13	6.33	2.16	6.77	2.19
						46	5.39	2.09	5.18	2.12	5.51	2.15	5.69	2.17	5.88	2.18	6.29	2.21	6.74	2.24

12. Capacity Table

12-4. AJ080TXJ4KH/EA

COOLING

Combination (Capacity Index)				Combination (Total)	Combination (%)	Outdoor Temperature (°C,DB)	Indoor Temperature (°C, WB)													
							14		16		18		19		20		22		24	
							TC(kW)	PI(kW)	TC(kW)	PI(kW)	TC(kW)	PI(kW)	TC(kW)	PI(kW)	TC(kW)	PI(kW)	TC(kW)	PI(kW)	TC(kW)	PI(kW)
2500	5000			7500	94%	10	6.36	1.57	8.98	1.61	9.15	1.65	9.25	1.67	9.36	1.69	9.62	1.72	9.93	1.76
						12	6.36	1.61	8.73	1.65	8.91	1.69	9.02	1.71	9.14	1.73	9.42	1.76	9.74	1.80
						14	6.36	1.65	8.50	1.69	8.69	1.73	8.81	1.75	8.93	1.77	9.22	1.80	9.55	1.84
						16	6.36	1.70	8.27	1.74	8.48	1.77	8.60	1.79	8.73	1.81	9.03	1.85	9.38	1.88
						18	6.36	1.74	8.06	1.78	8.28	1.82	8.41	1.83	8.54	1.85	8.86	1.89	9.21	1.92
						20	6.36	1.78	7.85	1.82	8.09	1.86	8.22	1.88	8.36	1.90	8.69	1.93	9.06	1.97
						21	6.36	1.81	7.76	1.84	7.99	1.88	8.13	1.90	8.28	1.92	8.61	1.95	8.98	1.99
						23	6.36	1.85	7.57	1.89	7.82	1.93	7.96	1.95	8.11	1.96	8.46	2.00	8.85	2.03
						25	6.36	1.90	7.39	1.94	7.65	1.98	7.80	1.99	7.96	2.01	8.32	2.05	8.72	2.08
						27	6.36	1.95	7.22	1.99	7.49	2.02	7.65	2.04	7.82	2.06	8.18	2.09	8.60	2.13
						29	6.36	2.00	7.06	2.04	7.35	2.07	7.51	2.09	7.68	2.11	8.06	2.14	8.49	2.18
						31	6.36	2.05	6.91	2.09	7.21	2.12	7.38	2.14	7.56	2.16	7.95	2.19	8.39	2.23
						33	6.36	2.10	6.77	2.14	7.08	2.17	7.26	2.19	7.44	2.21	7.85	2.24	8.30	2.28
						35	6.36	2.15	6.64	2.19	6.97	2.23	7.20	2.24	7.34	2.26	7.76	2.30	8.22	2.33
						37	6.36	2.21	6.52	2.25	6.86	2.28	7.05	2.30	7.24	2.32	7.67	2.35	8.15	2.38
						39	6.36	2.26	6.41	2.30	6.76	2.34	6.96	2.35	7.16	2.37	7.60	2.41	8.09	2.44
						42	6.36	2.35	6.27	2.39	6.64	2.42	6.84	2.44	7.05	2.46	7.51	2.49	8.02	2.52
						44	6.36	2.41	6.18	2.44	6.57	2.48	6.77	2.50	6.99	2.52	7.47	2.55	7.99	2.58
						46	6.36	2.47	6.11	2.50	6.50	2.54	6.72	2.56	6.94	2.57	7.43	2.61	7.96	2.64
2500	6800			9300	116%	10	6.36	1.57	9.41	1.71	9.59	1.76	9.70	1.78	9.82	1.79	10.09	1.83	10.41	1.87
						12	6.36	1.61	9.16	1.76	9.35	1.80	9.46	1.82	9.59	1.84	9.87	1.87	10.21	1.91
						14	6.36	1.65	8.91	1.80	9.11	1.84	9.23	1.86	9.37	1.88	9.67	1.92	10.02	1.95
						16	6.36	1.70	8.68	1.84	8.89	1.88	9.02	1.90	9.16	1.92	9.47	1.96	9.83	2.00
						18	6.36	1.74	8.45	1.89	8.68	1.93	8.81	1.95	8.96	1.97	9.29	2.01	9.66	2.04
						20	6.36	1.78	8.24	1.94	8.48	1.98	8.62	2.00	8.77	2.01	9.11	2.05	9.50	2.09
						21	6.36	1.81	8.13	1.96	8.38	2.00	8.53	2.02	8.68	2.04	9.03	2.08	9.42	2.11
						23	6.36	1.85	7.93	2.01	8.20	2.05	8.35	2.07	8.51	2.09	8.87	2.12	9.28	2.16
						25	6.36	1.90	7.75	2.06	8.02	2.10	8.18	2.12	8.35	2.14	8.72	2.17	9.14	2.21
						27	6.36	1.95	7.57	2.11	7.86	2.15	8.02	2.17	8.20	2.19	8.58	2.22	9.01	2.26
						29	6.36	2.00	7.40	2.16	7.70	2.20	7.87	2.22	8.05	2.24	8.45	2.28	8.90	2.31
						31	6.36	2.05	7.25	2.22	7.56	2.26	7.74	2.27	7.92	2.29	8.34	2.33	8.80	2.36
						33	6.36	2.10	7.10	2.27	7.43	2.31	7.61	2.33	7.80	2.35	8.23	2.38	8.70	2.42
						35	6.36	2.15	6.97	2.33	7.31	2.37	7.55	2.38	7.70	2.40	8.13	2.44	8.62	2.47
						37	6.36	2.21	6.84	2.39	7.19	2.42	7.39	2.44	7.60	2.46	8.05	2.50	8.55	2.53
						39	6.36	2.26	6.73	2.44	7.09	2.48	7.29	2.50	7.51	2.52	7.97	2.56	8.48	2.59
						42	6.36	2.35	6.57	2.54	6.96	2.57	7.17	2.59	7.40	2.61	7.88	2.65	8.41	2.68
						44	6.36	2.41	6.49	2.60	6.89	2.64	7.10	2.65	7.33	2.67	7.83	2.71	8.37	2.74
						46	6.36	2.47	6.41	2.66	6.82	2.70	7.05	2.72	7.28	2.74	7.79	2.77	8.35	2.80

12. Capacity Table

12-4. AJ080TXJ4KH/EA

COOLING

Combination (Capacity Index)				Combination (Total)	Combination (%)	Outdoor Temperature (°C,DB)	Indoor Temperature (°C, WB)													
							14		16		18		19		20		22		24	
							TC(kW)	PI(kW)	TC(kW)	PI(kW)	TC(kW)	PI(kW)	TC(kW)	PI(kW)	TC(kW)	PI(kW)	TC(kW)	PI(kW)	TC(kW)	PI(kW)
3500	3500			7000	88%	10	6.19	1.75	8.73	1.79	8.89	1.84	8.99	1.86	9.10	1.88	9.36	1.92	9.66	1.96
						12	6.19	1.79	8.49	1.84	8.67	1.88	8.77	1.90	8.89	1.92	9.15	1.96	9.47	2.00
						14	6.19	1.84	8.26	1.88	8.45	1.92	8.56	1.95	8.68	1.97	8.96	2.01	9.29	2.04
						16	6.19	1.89	8.04	1.93	8.24	1.97	8.36	1.99	8.49	2.01	8.78	2.05	9.12	2.09
						18	6.19	1.93	7.83	1.98	8.05	2.02	8.17	2.04	8.31	2.06	8.61	2.10	8.96	2.14
						20	6.19	1.98	7.64	2.03	7.86	2.07	7.99	2.09	8.13	2.11	8.45	2.15	8.81	2.18
						21	6.19	2.01	7.54	2.05	7.77	2.09	7.90	2.11	8.05	2.13	8.37	2.17	8.74	2.21
						23	6.19	2.06	7.36	2.10	7.60	2.14	7.74	2.16	7.89	2.18	8.22	2.22	8.60	2.26
						25	6.19	2.11	7.18	2.15	7.44	2.20	7.58	2.22	7.74	2.24	8.08	2.27	8.47	2.31
						27	6.19	2.16	7.02	2.21	7.29	2.25	7.44	2.27	7.60	2.29	7.96	2.33	8.36	2.36
						29	6.19	2.22	6.86	2.26	7.14	2.30	7.30	2.32	7.47	2.34	7.84	2.38	8.25	2.42
						31	6.19	2.28	6.72	2.32	7.01	2.36	7.17	2.38	7.35	2.40	7.73	2.44	8.15	2.47
						33	6.19	2.33	6.58	2.38	6.89	2.42	7.06	2.44	7.24	2.46	7.63	2.49	8.07	2.53
						35	6.19	2.39	6.46	2.44	6.77	2.48	7.00	2.49	7.13	2.52	7.54	2.55	7.99	2.59
						37	6.19	2.45	6.34	2.50	6.67	2.54	6.85	2.56	7.04	2.58	7.46	2.61	7.92	2.65
						39	6.19	2.52	6.24	2.56	6.58	2.60	6.76	2.62	6.96	2.64	7.39	2.67	7.87	2.71
						42	6.19	2.61	6.09	2.65	6.45	2.69	6.65	2.71	6.86	2.73	7.30	2.77	7.80	2.80
						44	6.19	2.68	6.01	2.72	6.38	2.76	6.59	2.78	6.80	2.80	7.26	2.83	7.76	2.87
						46	6.19	2.74	5.94	2.78	6.32	2.82	6.53	2.84	6.75	2.86	7.22	2.90	7.74	2.93
3500	5000			8500	106%	10	6.50	1.61	9.16	1.65	9.34	1.69	9.44	1.71	9.56	1.73	9.82	1.76	10.14	1.80
						12	6.50	1.65	8.91	1.69	9.10	1.73	9.21	1.75	9.33	1.77	9.61	1.80	9.94	1.84
						14	6.50	1.69	8.67	1.73	8.87	1.77	8.99	1.79	9.12	1.81	9.41	1.84	9.75	1.88
						16	6.50	1.73	8.45	1.77	8.66	1.81	8.78	1.83	8.92	1.85	9.22	1.89	9.57	1.92
						18	6.50	1.78	8.23	1.82	8.45	1.86	8.58	1.88	8.72	1.89	9.04	1.93	9.40	1.96
						20	6.50	1.82	8.02	1.86	8.26	1.90	8.39	1.92	8.54	1.94	8.87	1.97	9.25	2.01
						21	6.50	1.85	7.92	1.89	8.16	1.92	8.30	1.94	8.45	1.96	8.79	2.00	9.17	2.03
						23	6.50	1.89	7.72	1.93	7.98	1.97	8.13	1.99	8.28	2.01	8.63	2.04	9.03	2.08
						25	6.50	1.94	7.54	1.98	7.81	2.02	7.96	2.04	8.13	2.06	8.49	2.09	8.90	2.13
						27	6.50	1.99	7.37	2.03	7.65	2.07	7.81	2.09	7.98	2.11	8.35	2.14	8.78	2.17
						29	6.50	2.04	7.21	2.08	7.50	2.12	7.67	2.14	7.84	2.16	8.23	2.19	8.66	2.22
						31	6.50	2.09	7.05	2.13	7.36	2.17	7.53	2.19	7.71	2.21	8.12	2.24	8.56	2.28
						33	6.50	2.15	6.91	2.19	7.23	2.22	7.41	2.24	7.60	2.26	8.01	2.29	8.47	2.33
						35	6.50	2.20	6.78	2.24	7.11	2.28	7.35	2.29	7.49	2.31	7.92	2.35	8.39	2.38
						37	6.50	2.26	6.66	2.30	7.00	2.33	7.19	2.35	7.40	2.37	7.83	2.40	8.32	2.44
						39	6.50	2.31	6.55	2.35	6.90	2.39	7.10	2.41	7.31	2.42	7.76	2.46	8.26	2.49
						42	6.50	2.40	6.40	2.44	6.78	2.48	6.98	2.49	7.20	2.51	7.67	2.55	8.19	2.58
						44	6.50	2.46	6.31	2.50	6.70	2.54	6.92	2.55	7.14	2.57	7.62	2.61	8.15	2.64
						46	6.50	2.52	6.24	2.56	6.64	2.60	6.86	2.61	7.09	2.63	7.58	2.67	8.13	2.70

12. Capacity Table

12-4. AJ080TXJ4KH/EA

COOLING

Combination (Capacity Index)				Combination (Total)	Combination (%)	Outdoor Temperature (°C,DB)	Indoor Temperature (°C, WB)													
							14		16		18		19		20		22		24	
							TC(kW)	PI(kW)	TC(kW)	PI(kW)	TC(kW)	PI(kW)	TC(kW)	PI(kW)	TC(kW)	PI(kW)	TC(kW)	PI(kW)	TC(kW)	PI(kW)
3500	6800			10300	129%	10	6.50	1.61	9.60	1.73	9.78	1.77	9.89	1.79	10.01	1.81	10.29	1.85	10.62	1.89
						12	6.50	1.65	9.34	1.77	9.53	1.81	9.65	1.83	9.78	1.85	10.07	1.89	10.41	1.93
						14	6.50	1.69	9.09	1.81	9.30	1.86	9.42	1.88	9.55	1.89	9.86	1.93	10.22	1.97
						16	6.50	1.73	8.85	1.86	9.07	1.90	9.20	1.92	9.34	1.94	9.66	1.98	10.03	2.01
						18	6.50	1.78	8.62	1.91	8.85	1.95	8.99	1.97	9.14	1.98	9.47	2.02	9.85	2.06
						20	6.50	1.82	8.40	1.95	8.65	1.99	8.79	2.01	8.95	2.03	9.29	2.07	9.69	2.11
						21	6.50	1.85	8.29	1.98	8.55	2.02	8.70	2.04	8.85	2.06	9.21	2.09	9.61	2.13
						23	6.50	1.89	8.09	2.03	8.36	2.07	8.51	2.09	8.68	2.10	9.04	2.14	9.46	2.18
						25	6.50	1.94	7.90	2.08	8.18	2.12	8.34	2.14	8.51	2.15	8.89	2.19	9.32	2.23
						27	6.50	1.99	7.72	2.13	8.01	2.17	8.18	2.19	8.36	2.21	8.75	2.24	9.19	2.28
						29	6.50	2.04	7.55	2.18	7.86	2.22	8.03	2.24	8.21	2.26	8.62	2.30	9.08	2.33
						31	6.50	2.09	7.39	2.24	7.71	2.27	7.89	2.29	8.08	2.31	8.50	2.35	8.97	2.38
						33	6.50	2.15	7.24	2.29	7.58	2.33	7.76	2.35	7.96	2.37	8.39	2.40	8.87	2.44
						35	6.50	2.20	7.10	2.35	7.45	2.39	7.70	2.40	7.85	2.42	8.29	2.46	8.79	2.50
						37	6.50	2.26	6.98	2.41	7.34	2.44	7.54	2.46	7.75	2.48	8.21	2.52	8.72	2.55
						39	6.50	2.31	6.86	2.47	7.23	2.50	7.44	2.52	7.66	2.54	8.13	2.58	8.65	2.61
						42	6.50	2.40	6.70	2.56	7.10	2.60	7.31	2.61	7.54	2.63	8.03	2.67	8.58	2.70
						44	6.50	2.46	6.61	2.62	7.02	2.66	7.24	2.68	7.48	2.69	7.98	2.73	8.54	2.76
						46	6.50	2.52	6.54	2.68	6.96	2.72	7.18	2.74	7.43	2.76	7.95	2.79	8.51	2.83
5000	5000			10000	125%	10	8.61	1.67	8.95	1.71	9.29	1.74	9.47	1.76	9.64	1.78	10.00	1.81	10.36	1.85
						12	8.46	1.71	8.80	1.75	9.15	1.79	9.32	1.80	9.50	1.82	9.85	1.86	10.21	1.89
						14	8.31	1.76	8.65	1.80	9.00	1.83	9.17	1.85	9.35	1.87	9.70	1.90	10.06	1.94
						16	8.17	1.81	8.51	1.84	8.85	1.88	9.03	1.90	9.20	1.92	9.56	1.95	9.92	1.99
						18	8.02	1.85	8.36	1.89	8.70	1.93	8.88	1.95	9.05	1.96	9.41	2.00	9.77	2.04
						20	7.87	1.90	8.21	1.94	8.56	1.98	8.73	1.99	8.91	2.01	9.27	2.05	9.63	2.09
						21	7.80	1.93	8.14	1.96	8.48	2.00	8.66	2.02	8.84	2.04	9.19	2.07	9.56	2.11
						23	7.65	1.98	7.99	2.01	8.34	2.05	8.51	2.07	8.69	2.09	9.05	2.12	9.41	2.16
						25	7.50	2.03	7.84	2.06	8.19	2.10	8.37	2.12	8.55	2.14	8.90	2.18	9.27	2.21
						27	7.35	2.08	7.70	2.11	8.05	2.15	8.22	2.17	8.40	2.19	8.76	2.23	9.12	2.26
						29	7.21	2.13	7.55	2.17	7.90	2.20	8.08	2.22	8.26	2.24	8.62	2.28	8.98	2.32
						31	7.06	2.18	7.41	2.22	7.76	2.26	7.93	2.28	8.11	2.30	8.47	2.33	8.84	2.37
						33	6.92	2.23	7.26	2.27	7.61	2.31	7.79	2.33	7.97	2.35	8.33	2.39	8.70	2.43
						35	6.77	2.29	7.12	2.33	7.47	2.37	7.66	2.38	7.83	2.40	8.19	2.44	8.55	2.48
						37	6.63	2.34	6.97	2.38	7.32	2.42	7.50	2.44	7.68	2.46	8.04	2.50	8.41	2.54
						39	6.48	2.40	6.83	2.44	7.18	2.48	7.36	2.50	7.54	2.52	7.90	2.56	8.27	2.59
						42	6.27	2.49	6.61	2.52	6.97	2.56	7.15	2.58	7.33	2.60	7.69	2.64	8.06	2.68
						44	6.12	2.54	6.47	2.58	6.83	2.62	7.00	2.64	7.19	2.66	7.55	2.70	7.92	2.74
						46	5.98	2.60	6.33	2.64	6.68	2.68	6.86	2.70	7.04	2.72	7.41	2.76	7.78	2.80

12. Capacity Table

12-4. AJ080TXJ4KH/EA

COOLING

Combination (Capacity Index)				Combination (Total)	Combination (%)	Outdoor Temperature (°C,DB)	Indoor Temperature (°C, WB)													
							14		16		18		19		20		22		24	
							TC(kW)	PI(kW)	TC(kW)	PI(kW)	TC(kW)	PI(kW)	TC(kW)	PI(kW)	TC(kW)	PI(kW)	TC(kW)	PI(kW)	TC(kW)	PI(kW)
5000	6800			11800	148%	10	8.77	1.70	9.11	1.74	9.46	1.78	9.64	1.80	9.82	1.81	10.18	1.85	10.54	1.89
						12	8.62	1.75	8.96	1.79	9.31	1.82	9.49	1.84	9.67	1.86	10.03	1.90	10.40	1.93
						14	8.47	1.80	8.81	1.83	9.16	1.87	9.34	1.89	9.52	1.91	9.88	1.94	10.25	1.98
						16	8.31	1.84	8.66	1.88	9.01	1.92	9.19	1.94	9.37	1.96	9.73	1.99	10.10	2.03
						18	8.16	1.89	8.51	1.93	8.86	1.97	9.04	1.99	9.22	2.00	9.58	2.04	9.95	2.08
						20	8.01	1.94	8.36	1.98	8.71	2.02	8.89	2.04	9.07	2.05	9.43	2.09	9.80	2.13
						21	7.94	1.97	8.29	2.00	8.64	2.04	8.82	2.06	9.00	2.08	9.36	2.12	9.73	2.16
						23	7.79	2.02	8.14	2.05	8.49	2.09	8.67	2.11	8.85	2.13	9.21	2.17	9.58	2.21
						25	7.64	2.07	7.99	2.11	8.34	2.14	8.52	2.16	8.70	2.18	9.07	2.22	9.44	2.26
						27	7.49	2.12	7.84	2.16	8.19	2.20	8.37	2.22	8.55	2.24	8.92	2.27	9.29	2.31
						29	7.34	2.17	7.69	2.21	8.05	2.25	8.23	2.27	8.41	2.29	8.77	2.33	9.14	2.37
						31	7.19	2.23	7.54	2.27	7.90	2.30	8.08	2.32	8.26	2.34	8.63	2.38	9.00	2.42
						33	7.04	2.28	7.39	2.32	7.75	2.36	7.93	2.38	8.11	2.40	8.48	2.44	8.85	2.48
						35	6.89	2.34	7.25	2.38	7.60	2.42	7.80	2.43	7.97	2.45	8.34	2.49	8.71	2.53
						37	6.75	2.39	7.10	2.43	7.46	2.47	7.64	2.49	7.82	2.51	8.19	2.55	8.57	2.59
						39	6.60	2.45	6.95	2.49	7.31	2.53	7.49	2.55	7.68	2.57	8.05	2.61	8.42	2.65
						42	6.38	2.54	6.73	2.58	7.10	2.62	7.28	2.64	7.46	2.66	7.83	2.70	8.21	2.74
						44	6.23	2.60	6.59	2.64	6.95	2.68	7.13	2.70	7.32	2.72	7.69	2.76	8.06	2.80
						46	6.09	2.66	6.44	2.70	6.81	2.74	6.99	2.76	7.17	2.78	7.54	2.82	7.92	2.86
2000	2000	2000		6000	75%	10	5.30	1.30	7.48	1.33	7.62	1.36	7.71	1.38	7.80	1.40	8.02	1.42	8.28	1.45
						12	5.30	1.33	7.28	1.37	7.43	1.40	7.52	1.41	7.62	1.43	7.85	1.46	8.11	1.49
						14	5.30	1.37	7.08	1.40	7.24	1.43	7.34	1.45	7.44	1.46	7.68	1.49	7.96	1.52
						16	5.30	1.40	6.89	1.43	7.07	1.46	7.17	1.48	7.28	1.49	7.53	1.52	7.81	1.55
						18	5.30	1.44	6.72	1.47	6.90	1.50	7.00	1.52	7.12	1.53	7.38	1.56	7.68	1.59
						20	5.30	1.47	6.55	1.50	6.74	1.54	6.85	1.55	6.97	1.57	7.24	1.60	7.55	1.62
						21	5.30	1.49	6.46	1.52	6.66	1.55	6.78	1.57	6.90	1.58	7.17	1.61	7.49	1.64
						23	5.30	1.53	6.31	1.56	6.51	1.59	6.63	1.61	6.76	1.62	7.05	1.65	7.37	1.68
						25	5.30	1.57	6.16	1.60	6.38	1.63	6.50	1.65	6.63	1.66	6.93	1.69	7.26	1.72
						27	5.30	1.61	6.02	1.64	6.25	1.67	6.37	1.69	6.51	1.70	6.82	1.73	7.16	1.76
						29	5.30	1.65	5.88	1.68	6.12	1.71	6.26	1.73	6.40	1.74	6.72	1.77	7.07	1.80
						31	5.30	1.69	5.76	1.72	6.01	1.75	6.15	1.77	6.30	1.78	6.62	1.81	6.99	1.84
						33	5.30	1.73	5.64	1.77	5.90	1.80	6.05	1.81	6.20	1.83	6.54	1.85	6.92	1.88
						35	5.30	1.78	5.54	1.81	5.81	1.84	6.00	1.85	6.12	1.87	6.46	1.90	6.85	1.92
						37	5.30	1.82	5.44	1.85	5.72	1.88	5.87	1.90	6.04	1.91	6.39	1.94	6.79	1.97
						39	5.30	1.87	5.34	1.90	5.64	1.93	5.80	1.94	5.97	1.96	6.34	1.99	6.74	2.01
						42	5.30	1.94	5.22	1.97	5.53	2.00	5.70	2.01	5.88	2.03	6.26	2.06	6.68	2.08
						44	5.30	1.99	5.15	2.02	5.47	2.05	5.64	2.06	5.83	2.08	6.22	2.10	6.65	2.13
						46	5.30	2.04	5.09	2.07	5.42	2.10	5.60	2.11	5.79	2.13	6.19	2.15	6.63	2.18

12. Capacity Table

12-4. AJ080TXJ4KH/EA

COOLING

Combination (Capacity Index)				Combination (Total)	Combination (%)	Outdoor Temperature (°C,DB)	Indoor Temperature (°C, WB)													
							14		16		18		19		20		22		24	
							TC(kW)	PI(kW)	TC(kW)	PI(kW)	TC(kW)	PI(kW)	TC(kW)	PI(kW)	TC(kW)	PI(kW)	TC(kW)	PI(kW)	TC(kW)	PI(kW)
2000	2000	2500		6500	81%	10	5.83	1.41	8.23	1.44	8.38	1.47	8.48	1.49	8.58	1.51	8.82	1.54	9.10	1.57
						12	5.83	1.44	8.00	1.48	8.17	1.51	8.27	1.53	8.38	1.54	8.63	1.57	8.93	1.61
						14	5.83	1.48	7.79	1.51	7.97	1.55	8.07	1.56	8.19	1.58	8.45	1.61	8.76	1.64
						16	5.83	1.51	7.58	1.55	7.77	1.58	7.88	1.60	8.01	1.62	8.28	1.65	8.60	1.68
						18	5.83	1.55	7.39	1.59	7.59	1.62	7.70	1.64	7.83	1.65	8.12	1.69	8.45	1.72
						20	5.83	1.59	7.20	1.63	7.41	1.66	7.53	1.68	7.67	1.69	7.96	1.72	8.30	1.75
						21	5.83	1.61	7.11	1.65	7.33	1.68	7.45	1.70	7.59	1.71	7.89	1.74	8.24	1.77
						23	5.83	1.65	6.94	1.69	7.17	1.72	7.30	1.74	7.44	1.75	7.75	1.78	8.11	1.81
						25	5.83	1.70	6.77	1.73	7.01	1.76	7.15	1.78	7.30	1.80	7.62	1.83	7.99	1.86
						27	5.83	1.74	6.62	1.77	6.87	1.81	7.01	1.82	7.16	1.84	7.50	1.87	7.88	1.90
						29	5.83	1.78	6.47	1.82	6.74	1.85	6.88	1.87	7.04	1.88	7.39	1.91	7.78	1.94
						31	5.83	1.83	6.33	1.86	6.61	1.90	6.76	1.91	6.93	1.93	7.29	1.96	7.69	1.99
						33	5.83	1.87	6.21	1.91	6.49	1.94	6.65	1.96	6.82	1.97	7.19	2.00	7.61	2.03
						35	5.83	1.92	6.09	1.96	6.39	1.99	6.60	2.00	6.73	2.02	7.11	2.05	7.53	2.08
						37	5.83	1.97	5.98	2.00	6.29	2.04	6.46	2.05	6.64	2.07	7.03	2.10	7.47	2.13
						39	5.83	2.02	5.88	2.05	6.20	2.09	6.38	2.10	6.56	2.12	6.97	2.15	7.42	2.18
						42	5.83	2.10	5.75	2.13	6.08	2.16	6.27	2.18	6.46	2.19	6.89	2.22	7.35	2.25
						44	5.83	2.15	5.67	2.18	6.02	2.21	6.21	2.23	6.41	2.25	6.84	2.28	7.32	2.30
						46	5.83	2.20	5.60	2.24	5.96	2.27	6.16	2.28	6.37	2.30	6.81	2.33	7.30	2.36
2000	2000	3500		7500	94%	10	6.36	1.61	8.98	1.65	9.15	1.69	9.25	1.71	9.36	1.73	9.62	1.76	9.93	1.80
						12	6.36	1.65	8.73	1.69	8.91	1.73	9.02	1.75	9.14	1.77	9.42	1.80	9.74	1.84
						14	6.36	1.69	8.50	1.73	8.69	1.77	8.81	1.79	8.93	1.81	9.22	1.84	9.55	1.88
						16	6.36	1.73	8.27	1.77	8.48	1.81	8.60	1.83	8.73	1.85	9.03	1.89	9.38	1.92
						18	6.36	1.78	8.06	1.82	8.28	1.86	8.41	1.88	8.54	1.89	8.86	1.93	9.21	1.96
						20	6.36	1.82	7.85	1.86	8.09	1.90	8.22	1.92	8.36	1.94	8.69	1.97	9.06	2.01
						21	6.36	1.85	7.76	1.89	7.99	1.92	8.13	1.94	8.28	1.96	8.61	2.00	8.98	2.03
						23	6.36	1.89	7.57	1.93	7.82	1.97	7.96	1.99	8.11	2.01	8.46	2.04	8.85	2.08
						25	6.36	1.94	7.39	1.98	7.65	2.02	7.80	2.04	7.96	2.06	8.32	2.09	8.72	2.13
						27	6.36	1.99	7.22	2.03	7.49	2.07	7.65	2.09	7.82	2.11	8.18	2.14	8.60	2.17
						29	6.36	2.04	7.06	2.08	7.35	2.12	7.51	2.14	7.68	2.16	8.06	2.19	8.49	2.22
						31	6.36	2.09	6.91	2.13	7.21	2.17	7.38	2.19	7.56	2.21	7.95	2.24	8.39	2.28
						33	6.36	2.15	6.77	2.19	7.08	2.22	7.26	2.24	7.44	2.26	7.85	2.29	8.30	2.33
						35	6.36	2.20	6.64	2.24	6.97	2.28	7.20	2.29	7.34	2.31	7.76	2.35	8.22	2.38
						37	6.36	2.26	6.52	2.30	6.86	2.33	7.05	2.35	7.24	2.37	7.67	2.40	8.15	2.44
						39	6.36	2.31	6.41	2.35	6.76	2.39	6.96	2.41	7.16	2.42	7.60	2.46	8.09	2.49
						42	6.36	2.40	6.27	2.44	6.64	2.48	6.84	2.49	7.05	2.51	7.51	2.55	8.02	2.58
						44	6.36	2.46	6.18	2.50	6.57	2.54	6.77	2.55	6.99	2.57	7.47	2.61	7.99	2.64
						46	6.36	2.52	6.11	2.56	6.50	2.60	6.72	2.61	6.94	2.63	7.43	2.67	7.96	2.70

12. Capacity Table

12-4. AJ080TXJ4KH/EA

COOLING

Combination (Capacity Index)				Combination (Total)	Combination (%)	Outdoor Temperature (°C,DB)	Indoor Temperature (°C, WB)													
							14		16		18		19		20		22		24	
							TC(kW)	PI(kW)	TC(kW)	PI(kW)	TC(kW)	PI(kW)	TC(kW)	PI(kW)	TC(kW)	PI(kW)	TC(kW)	PI(kW)	TC(kW)	PI(kW)
2000	2000	5000		9000	113%	10	8.49	1.59	8.82	1.62	9.16	1.65	9.33	1.67	9.50	1.69	9.85	1.72	10.21	1.75
						12	8.34	1.63	8.68	1.66	9.01	1.70	9.19	1.71	9.36	1.73	9.71	1.76	10.06	1.80
						14	8.19	1.67	8.53	1.71	8.87	1.74	9.04	1.76	9.21	1.77	9.56	1.81	9.92	1.84
						16	8.05	1.72	8.38	1.75	8.72	1.78	8.90	1.80	9.07	1.82	9.42	1.85	9.78	1.89
						18	7.90	1.76	8.24	1.79	8.58	1.83	8.75	1.85	8.92	1.86	9.28	1.90	9.63	1.93
						20	7.76	1.81	8.09	1.84	8.43	1.88	8.61	1.89	8.78	1.91	9.13	1.95	9.49	1.98
						21	7.68	1.83	8.02	1.86	8.36	1.90	8.53	1.92	8.71	1.93	9.06	1.97	9.42	2.00
						23	7.54	1.88	7.88	1.91	8.22	1.95	8.39	1.96	8.57	1.98	8.92	2.02	9.28	2.05
						25	7.39	1.92	7.73	1.96	8.07	1.99	8.25	2.01	8.42	2.03	8.78	2.07	9.13	2.10
						27	7.25	1.97	7.59	2.01	7.93	2.04	8.10	2.06	8.28	2.08	8.63	2.11	8.99	2.15
						29	7.10	2.02	7.44	2.06	7.79	2.09	7.96	2.11	8.14	2.13	8.49	2.16	8.85	2.20
						31	6.96	2.07	7.30	2.11	7.65	2.14	7.82	2.16	8.00	2.18	8.35	2.22	8.71	2.25
						33	6.82	2.12	7.16	2.16	7.50	2.19	7.68	2.21	7.85	2.23	8.21	2.27	8.57	2.30
						35	6.67	2.17	7.01	2.21	7.36	2.25	7.55	2.26	7.71	2.28	8.07	2.32	8.43	2.36
						37	6.53	2.23	6.87	2.26	7.22	2.30	7.40	2.32	7.57	2.34	7.93	2.37	8.29	2.41
						39	6.39	2.28	6.73	2.32	7.08	2.35	7.25	2.37	7.43	2.39	7.79	2.43	8.15	2.46
						42	6.18	2.36	6.52	2.40	6.87	2.43	7.04	2.45	7.22	2.47	7.58	2.51	7.94	2.55
						44	6.03	2.42	6.38	2.45	6.73	2.49	6.90	2.51	7.08	2.53	7.44	2.57	7.81	2.60
						46	5.89	2.47	6.24	2.51	6.59	2.55	6.76	2.57	6.94	2.58	7.30	2.62	7.67	2.66
2000	2000	6800		10800	135%	10	8.49	1.59	9.35	1.68	9.71	1.71	9.89	1.73	10.07	1.75	10.44	1.78	10.81	1.82
						12	8.34	1.63	9.19	1.72	9.55	1.76	9.73	1.77	9.92	1.79	10.29	1.83	10.66	1.86
						14	8.19	1.67	9.04	1.77	9.40	1.80	9.58	1.82	9.76	1.84	10.13	1.87	10.51	1.91
						16	8.05	1.72	8.88	1.81	9.24	1.85	9.43	1.87	9.61	1.88	9.98	1.92	10.36	1.95
						18	7.90	1.76	8.73	1.86	9.09	1.89	9.27	1.91	9.46	1.93	9.83	1.97	10.21	2.00
						20	7.76	1.81	8.57	1.91	8.94	1.94	9.12	1.96	9.30	1.98	9.68	2.01	10.05	2.05
						21	7.68	1.83	8.50	1.93	8.86	1.97	9.04	1.98	9.23	2.00	9.60	2.04	9.98	2.08
						23	7.54	1.88	8.34	1.98	8.71	2.02	8.89	2.03	9.08	2.05	9.45	2.09	9.83	2.12
						25	7.39	1.92	8.19	2.03	8.56	2.07	8.74	2.08	8.92	2.10	9.30	2.14	9.68	2.18
						27	7.25	1.97	8.04	2.08	8.40	2.12	8.59	2.13	8.77	2.15	9.15	2.19	9.53	2.23
						29	7.10	2.02	7.89	2.13	8.25	2.17	8.44	2.19	8.62	2.20	9.00	2.24	9.38	2.28
						31	6.96	2.07	7.74	2.18	8.10	2.22	8.29	2.24	8.47	2.26	8.85	2.29	9.23	2.33
						33	6.82	2.12	7.58	2.23	7.95	2.27	8.14	2.29	8.32	2.31	8.70	2.35	9.08	2.39
						35	6.67	2.17	7.43	2.29	7.80	2.33	8.00	2.34	8.17	2.36	8.55	2.40	8.93	2.44
						37	6.53	2.23	7.28	2.34	7.65	2.38	7.84	2.40	8.02	2.42	8.40	2.46	8.79	2.50
						39	6.39	2.28	7.13	2.40	7.50	2.44	7.69	2.46	7.87	2.47	8.25	2.51	8.64	2.55
						42	6.18	2.36	6.91	2.48	7.28	2.52	7.46	2.54	7.65	2.56	8.03	2.60	8.42	2.64
						44	6.03	2.42	6.76	2.54	7.13	2.58	7.32	2.60	7.50	2.62	7.88	2.66	8.27	2.70
						46	5.89	2.47	6.61	2.60	6.98	2.64	7.17	2.66	7.36	2.68	7.74	2.72	8.12	2.75

12. Capacity Table

12-4. AJ080TXJ4KH/EA

COOLING

Combination (Capacity Index)				Combination (Total)	Combination (%)	Outdoor Temperature (°C,DB)	Indoor Temperature (°C, WB)													
							14		16		18		19		20		22		24	
							TC(kW)	PI(kW)	TC(kW)	PI(kW)	TC(kW)	PI(kW)	TC(kW)	PI(kW)	TC(kW)	PI(kW)	TC(kW)	PI(kW)	TC(kW)	PI(kW)
2000	2500	2500		7000	88%	10	6.19	1.56	8.73	1.60	8.89	1.64	8.99	1.66	9.10	1.67	9.36	1.71	9.66	1.74
						12	6.19	1.60	8.49	1.64	8.67	1.68	8.77	1.69	8.89	1.71	9.15	1.75	9.47	1.78
						14	6.19	1.64	8.26	1.68	8.45	1.72	8.56	1.73	8.68	1.75	8.96	1.79	9.29	1.82
						16	6.19	1.68	8.04	1.72	8.24	1.76	8.36	1.78	8.49	1.79	8.78	1.83	9.12	1.86
						18	6.19	1.72	7.83	1.76	8.05	1.80	8.17	1.82	8.31	1.84	8.61	1.87	8.96	1.90
						20	6.19	1.77	7.64	1.81	7.86	1.84	7.99	1.86	8.13	1.88	8.45	1.91	8.81	1.95
						21	6.19	1.79	7.54	1.83	7.77	1.87	7.90	1.88	8.05	1.90	8.37	1.94	8.74	1.97
						23	6.19	1.84	7.36	1.87	7.60	1.91	7.74	1.93	7.89	1.95	8.22	1.98	8.60	2.01
						25	6.19	1.88	7.18	1.92	7.44	1.96	7.58	1.98	7.74	1.99	8.08	2.03	8.47	2.06
						27	6.19	1.93	7.02	1.97	7.29	2.01	7.44	2.02	7.60	2.04	7.96	2.07	8.36	2.11
						29	6.19	1.98	6.86	2.02	7.14	2.05	7.30	2.07	7.47	2.09	7.84	2.12	8.25	2.16
						31	6.19	2.03	6.72	2.07	7.01	2.10	7.17	2.12	7.35	2.14	7.73	2.17	8.15	2.21
						33	6.19	2.08	6.58	2.12	6.89	2.16	7.06	2.17	7.24	2.19	7.63	2.22	8.07	2.26
						35	6.19	2.13	6.46	2.17	6.77	2.21	7.00	2.22	7.13	2.15	7.54	2.28	7.99	2.31
						37	6.19	2.19	6.34	2.23	6.67	2.26	6.85	2.28	7.04	2.30	7.46	2.33	7.92	2.36
						39	6.19	2.24	6.24	2.28	6.58	2.32	6.76	2.33	6.96	2.35	7.39	2.38	7.87	2.42
						42	6.19	2.33	6.09	2.36	6.45	2.40	6.65	2.42	6.86	2.43	7.30	2.47	7.80	2.50
						44	6.19	2.39	6.01	2.42	6.38	2.46	6.59	2.48	6.80	2.49	7.26	2.53	7.76	2.56
						46	6.19	2.45	5.94	2.48	6.32	2.52	6.53	2.53	6.75	2.55	7.22	2.58	7.74	2.62
2000	2500	3500		8000	100%	10	8.22	1.56	8.54	1.59	8.87	1.62	9.04	1.64	9.20	1.66	9.54	1.69	9.88	1.72
						12	8.08	1.60	8.40	1.63	8.73	1.67	8.89	1.68	9.06	1.70	9.40	1.73	9.74	1.77
						14	7.93	1.64	8.26	1.68	8.59	1.71	8.75	1.73	8.92	1.74	9.26	1.78	9.60	1.81
						16	7.79	1.69	8.12	1.72	8.45	1.75	8.61	1.77	8.78	1.79	9.12	1.82	9.46	1.85
						18	7.65	1.73	7.98	1.76	8.31	1.80	8.47	1.81	8.64	1.83	8.98	1.87	9.33	1.90
						20	7.51	1.77	7.84	1.81	8.17	1.84	8.33	1.86	8.50	1.88	8.84	1.91	9.19	1.95
						21	7.44	1.80	7.77	1.83	8.10	1.87	8.26	1.88	8.43	1.90	8.77	1.93	9.12	1.97
						23	7.30	1.84	7.62	1.88	7.96	1.91	8.12	1.93	8.29	1.95	8.63	1.98	8.98	2.02
						25	7.16	1.89	7.49	1.92	7.82	1.96	7.99	1.98	8.15	1.99	8.50	2.03	8.84	2.06
						27	7.02	1.94	7.35	1.97	7.68	2.01	7.85	2.02	8.02	2.04	8.36	2.08	8.71	2.11
						29	6.88	1.99	7.21	2.02	7.54	2.06	7.71	2.07	7.88	2.09	8.22	2.13	8.57	2.16
						31	6.74	2.03	7.07	2.07	7.40	2.11	7.57	2.12	7.74	2.14	8.09	2.18	8.43	2.21
						33	6.60	2.08	6.93	2.12	7.26	2.16	7.43	2.17	7.60	2.19	7.95	2.23	8.30	2.26
						35	6.46	2.13	6.79	2.17	7.13	2.21	7.31	2.22	7.47	2.15	7.81	2.28	8.16	2.31
						37	6.32	2.19	6.65	2.22	6.99	2.26	7.16	2.28	7.33	2.29	7.68	2.33	8.03	2.37
						39	6.19	2.24	6.52	2.27	6.85	2.31	7.02	2.33	7.20	2.35	7.54	2.38	7.89	2.42
						42	5.98	2.32	6.31	2.35	6.65	2.39	6.82	2.41	6.99	2.43	7.34	2.47	7.69	2.50
						44	5.84	2.37	6.18	2.41	6.51	2.45	6.68	2.46	6.86	2.48	7.20	2.52	7.56	2.56
						46	5.71	2.43	6.04	2.46	6.38	2.50	6.55	2.52	6.72	2.54	7.07	2.58	7.42	2.61

12. Capacity Table

12-4. AJ080TXJ4KH/EA

COOLING

Combination (Capacity Index)				Combination (Total)	Combination (%)	Outdoor Temperature (°C,DB)	Indoor Temperature (°C, WB)													
							14		16		18		19		20		22		24	
							TC(kW)	PI(kW)	TC(kW)	PI(kW)	TC(kW)	PI(kW)	TC(kW)	PI(kW)	TC(kW)	PI(kW)	TC(kW)	PI(kW)	TC(kW)	PI(kW)
						10	8.60	1.59	8.94	1.62	9.28	1.65	9.46	1.67	9.63	1.69	9.98	1.72	10.34	1.75
						12	8.45	1.63	8.79	1.66	9.13	1.70	9.31	1.71	9.48	1.73	9.84	1.76	10.20	1.80
						14	8.30	1.67	8.64	1.71	8.99	1.74	9.16	1.76	9.34	1.77	9.69	1.81	10.05	1.84
						16	8.15	1.72	8.49	1.75	8.84	1.78	9.01	1.80	9.19	1.82	9.54	1.85	9.90	1.89
						18	8.01	1.76	8.35	1.79	8.69	1.83	8.87	1.85	9.04	1.86	9.40	1.90	9.76	1.93
						20	7.86	1.81	8.20	1.84	8.55	1.88	8.72	1.89	8.90	1.91	9.25	1.95	9.61	1.98
						21	7.78	1.83	8.13	1.86	8.47	1.90	8.65	1.92	8.82	1.93	9.18	1.97	9.54	2.00
						23	7.64	1.88	7.98	1.91	8.33	1.95	8.50	1.96	8.68	1.98	9.04	2.02	9.40	2.05
						25	7.49	1.92	7.83	1.96	8.18	1.99	8.36	2.01	8.53	2.03	8.89	2.07	9.26	2.10
2000	2500	5000		9500	119%	27	7.34	1.97	7.69	2.01	8.04	2.04	8.21	2.06	8.39	2.08	8.75	2.11	9.11	2.15
						29	7.20	2.02	7.54	2.06	7.89	2.09	8.07	2.11	8.25	2.13	8.60	2.16	8.97	2.20
						31	7.05	2.07	7.40	2.11	7.75	2.14	7.92	2.16	8.10	2.18	8.46	2.22	8.83	2.25
						33	6.91	2.12	7.25	2.16	7.60	2.19	7.78	2.21	7.96	2.23	8.32	2.27	8.68	2.30
						35	6.76	2.17	7.11	2.21	7.46	2.25	7.65	2.26	7.81	2.28	8.18	2.32	8.54	2.36
						37	6.62	2.23	6.96	2.26	7.32	2.30	7.49	2.32	7.67	2.34	8.03	2.37	8.40	2.41
						39	6.47	2.28	6.82	2.32	7.17	2.35	7.35	2.37	7.53	2.39	7.89	2.43	8.26	2.46
						42	6.26	2.36	6.61	2.40	6.96	2.43	7.14	2.45	7.32	2.47	7.68	2.51	8.05	2.55
						44	6.11	2.42	6.46	2.45	6.82	2.49	7.00	2.51	7.18	2.53	7.54	2.57	7.91	2.60
						46	5.97	2.47	6.32	2.51	6.67	2.55	6.85	2.57	7.03	2.58	7.40	2.62	7.77	2.66
						10	8.60	1.59	9.35	1.68	9.71	1.71	9.89	1.73	10.07	1.75	10.44	1.78	10.81	1.82
						12	8.45	1.63	9.19	1.72	9.55	1.76	9.73	1.77	9.92	1.79	10.29	1.83	10.66	1.86
						14	8.30	1.67	9.04	1.77	9.40	1.80	9.58	1.82	9.76	1.84	10.13	1.87	10.51	1.91
						16	8.15	1.72	8.88	1.81	9.24	1.85	9.43	1.87	9.61	1.88	9.98	1.92	10.36	1.95
						18	8.01	1.76	8.73	1.86	9.09	1.89	9.27	1.91	9.46	1.93	9.83	1.97	10.21	2.00
						20	7.86	1.81	8.57	1.91	8.94	1.94	9.12	1.96	9.30	1.98	9.68	2.01	10.05	2.05
						21	7.78	1.83	8.50	1.93	8.86	1.97	9.04	1.98	9.23	2.00	9.60	2.04	9.98	2.08
						23	7.64	1.88	8.34	1.98	8.71	2.02	8.89	2.03	9.08	2.05	9.45	2.09	9.83	2.12
						25	7.49	1.92	8.19	2.03	8.56	2.07	8.74	2.08	8.92	2.10	9.30	2.14	9.68	2.18
2000	2500	6800		11300	141%	27	7.34	1.97	8.04	2.08	8.40	2.12	8.59	2.13	8.77	2.15	9.15	2.19	9.53	2.23
						29	7.20	2.02	7.89	2.13	8.25	2.17	8.44	2.19	8.62	2.20	9.00	2.24	9.38	2.28
						31	7.05	2.07	7.74	2.18	8.10	2.22	8.29	2.24	8.47	2.26	8.85	2.29	9.23	2.33
						33	6.91	2.12	7.58	2.23	7.95	2.27	8.14	2.29	8.32	2.31	8.70	2.35	9.08	2.39
						35	6.76	2.17	7.43	2.29	7.80	2.33	8.00	2.34	8.17	2.36	8.55	2.40	8.93	2.44
						37	6.62	2.23	7.28	2.34	7.65	2.38	7.84	2.40	8.02	2.42	8.40	2.46	8.79	2.50
						39	6.47	2.28	7.13	2.40	7.50	2.44	7.69	2.46	7.87	2.47	8.25	2.51	8.64	2.55
						42	6.26	2.36	6.91	2.48	7.28	2.52	7.46	2.54	7.65	2.56	8.03	2.60	8.42	2.64
						44	6.11	2.42	6.76	2.54	7.13	2.58	7.32	2.60	7.50	2.62	7.88	2.66	8.27	2.70
						46	5.97	2.47	6.61	2.60	6.98	2.64	7.17	2.66	7.36	2.68	7.74	2.72	8.12	2.75

12. Capacity Table

12-4. AJ080TXJ4KH/EA

COOLING

Combination (Capacity Index)				Combination (Total)	Combination (%)	Outdoor Temperature (°C,DB)	Indoor Temperature (°C, WB)													
							14		16		18		19		20		22		24	
							TC(kW)	PI(kW)	TC(kW)	PI(kW)	TC(kW)	PI(kW)	TC(kW)	PI(kW)	TC(kW)	PI(kW)	TC(kW)	PI(kW)	TC(kW)	PI(kW)
2000	3500	3500		9000	113%	10	8.48	1.59	8.81	1.62	9.15	1.65	9.32	1.67	9.49	1.69	9.84	1.72	10.19	1.75
						12	8.33	1.63	8.66	1.66	9.00	1.70	9.17	1.71	9.35	1.73	9.70	1.76	10.05	1.80
						14	8.18	1.67	8.52	1.71	8.86	1.74	9.03	1.76	9.20	1.77	9.55	1.81	9.91	1.84
						16	8.04	1.72	8.37	1.75	8.71	1.78	8.88	1.80	9.06	1.82	9.41	1.85	9.76	1.89
						18	7.89	1.76	8.23	1.79	8.57	1.83	8.74	1.85	8.91	1.86	9.26	1.90	9.62	1.93
						20	7.75	1.81	8.08	1.84	8.42	1.88	8.60	1.89	8.77	1.91	9.12	1.95	9.48	1.98
						21	7.67	1.83	8.01	1.86	8.35	1.90	8.52	1.92	8.70	1.93	9.05	1.97	9.41	2.00
						23	7.53	1.88	7.86	1.91	8.21	1.95	8.38	1.96	8.55	1.98	8.91	2.02	9.26	2.05
						25	7.38	1.92	7.72	1.96	8.06	1.99	8.24	2.01	8.41	2.03	8.76	2.07	9.12	2.10
						27	7.24	1.97	7.58	2.01	7.92	2.04	8.09	2.06	8.27	2.08	8.62	2.11	8.98	2.15
						29	7.09	2.02	7.43	2.06	7.78	2.09	7.95	2.11	8.13	2.13	8.48	2.16	8.84	2.20
						31	6.95	2.07	7.29	2.11	7.64	2.14	7.81	2.16	7.98	2.18	8.34	2.22	8.70	2.25
						33	6.81	2.12	7.15	2.16	7.49	2.19	7.67	2.21	7.84	2.23	8.20	2.27	8.56	2.30
						35	6.66	2.17	7.01	2.21	7.35	2.25	7.54	2.26	7.70	2.28	8.06	2.32	8.42	2.36
						37	6.52	2.23	6.86	2.26	7.21	2.30	7.39	2.32	7.56	2.34	7.92	2.37	8.28	2.41
						39	6.38	2.28	6.72	2.32	7.07	2.35	7.24	2.37	7.42	2.39	7.78	2.43	8.14	2.46
						42	6.17	2.36	6.51	2.40	6.86	2.43	7.03	2.45	7.21	2.47	7.57	2.51	7.93	2.55
						44	6.03	2.42	6.37	2.45	6.72	2.49	6.89	2.51	7.07	2.53	7.43	2.57	7.80	2.60
						46	5.88	2.47	6.23	2.51	6.58	2.55	6.76	2.57	6.93	2.58	7.29	2.62	7.66	2.66
2000	3500	5000		10500	131%	10	8.86	1.63	9.21	1.67	9.56	1.70	9.74	1.72	9.92	1.74	10.28	1.77	10.65	1.81
						12	8.71	1.68	9.06	1.71	9.41	1.75	9.59	1.77	9.77	1.78	10.13	1.82	10.50	1.85
						14	8.55	1.72	8.90	1.76	9.26	1.79	9.44	1.81	9.62	1.83	9.98	1.86	10.35	1.90
						16	8.40	1.77	8.75	1.80	9.11	1.84	9.28	1.86	9.47	1.88	9.83	1.91	10.20	1.95
						18	8.25	1.81	8.60	1.85	8.95	1.89	9.13	1.90	9.31	1.92	9.68	1.96	10.05	1.99
						20	8.09	1.86	8.45	1.90	8.80	1.93	8.98	1.95	9.16	1.97	9.53	2.01	9.90	2.04
						21	8.02	1.89	8.37	1.92	8.73	1.96	8.91	1.98	9.09	1.99	9.46	2.03	9.83	2.07
						23	7.87	1.93	8.22	1.97	8.58	2.01	8.76	2.02	8.94	2.04	9.31	2.08	9.68	2.12
						25	7.72	1.98	8.07	2.02	8.43	2.06	8.61	2.07	8.79	2.09	9.16	2.13	9.53	2.17
						27	7.56	2.03	7.92	2.07	8.28	2.11	8.46	2.12	8.64	2.14	9.01	2.18	9.39	2.22
						29	7.41	2.08	7.77	2.12	8.13	2.16	8.31	2.18	8.49	2.19	8.86	2.23	9.24	2.27
						31	7.26	2.14	7.62	2.17	7.98	2.21	8.16	2.23	8.35	2.25	8.72	2.28	9.09	2.32
						33	7.11	2.19	7.47	2.22	7.83	2.26	8.01	2.28	8.20	2.30	8.57	2.34	8.95	2.38
						35	6.97	2.24	7.32	2.28	7.68	2.32	7.88	2.33	8.05	2.35	8.42	2.39	8.80	2.43
						37	6.82	2.29	7.17	2.33	7.54	2.37	7.72	2.39	7.90	2.41	8.28	2.45	8.65	2.48
						39	6.67	2.35	7.03	2.39	7.39	2.43	7.57	2.44	7.76	2.46	8.13	2.50	8.51	2.54
						42	6.45	2.43	6.80	2.47	7.17	2.51	7.35	2.53	7.54	2.55	7.91	2.59	8.29	2.63
						44	6.30	2.49	6.66	2.53	7.02	2.57	7.21	2.59	7.39	2.61	7.77	2.65	8.15	2.68
						46	6.15	2.55	6.51	2.59	6.88	2.63	7.06	2.65	7.25	2.66	7.62	2.70	8.00	2.74

12. Capacity Table

12-4. AJ080TXJ4KH/EA

COOLING

Combination (Capacity Index)				Combination (Total)	Combination (%)	Outdoor Temperature (°C,DB)	Indoor Temperature (°C, WB)													
							14		16		18		19		20		22		24	
							TC(kW)	PI(kW)	TC(kW)	PI(kW)	TC(kW)	PI(kW)	TC(kW)	PI(kW)	TC(kW)	PI(kW)	TC(kW)	PI(kW)	TC(kW)	PI(kW)
2000	5000	5000		12000	150%	10	8.86	1.63	9.35	1.70	9.71	1.73	9.89	1.75	10.07	1.77	10.44	1.80	10.81	1.84
						12	8.71	1.68	9.19	1.74	9.55	1.78	9.73	1.80	9.92	1.81	10.29	1.85	10.66	1.89
						14	8.55	1.72	9.04	1.79	9.40	1.82	9.58	1.84	9.76	1.86	10.13	1.90	10.51	1.93
						16	8.40	1.77	8.88	1.84	9.24	1.87	9.43	1.89	9.61	1.91	9.98	1.94	10.36	1.98
						18	8.25	1.81	8.73	1.88	9.09	1.92	9.27	1.94	9.46	1.96	9.83	1.99	10.21	2.03
						20	8.09	1.86	8.57	1.93	8.94	1.97	9.12	1.99	9.30	2.00	9.68	2.04	10.05	2.08
						21	8.02	1.89	8.50	1.95	8.86	1.99	9.04	2.01	9.23	2.03	9.60	2.07	9.98	2.10
						23	7.87	1.93	8.34	2.00	8.71	2.04	8.89	2.06	9.08	2.08	9.45	2.12	9.83	2.15
						25	7.72	1.98	8.19	2.05	8.56	2.09	8.74	2.11	8.92	2.13	9.30	2.17	9.68	2.20
						27	7.56	2.03	8.04	2.11	8.40	2.14	8.59	2.16	8.77	2.18	9.15	2.22	9.53	2.26
						29	7.41	2.08	7.89	2.16	8.25	2.19	8.44	2.21	8.62	2.23	9.00	2.27	9.38	2.31
						31	7.26	2.14	7.74	2.21	8.10	2.25	8.29	2.27	8.47	2.29	8.85	2.32	9.23	2.36
						33	7.11	2.19	7.58	2.26	7.95	2.30	8.14	2.32	8.32	2.34	8.70	2.38	9.08	2.42
						35	6.97	2.24	7.43	2.32	7.80	2.36	8.00	2.37	8.17	2.39	8.55	2.43	8.93	2.47
						37	6.82	2.29	7.28	2.37	7.65	2.41	7.84	2.43	8.02	2.45	8.40	2.49	8.79	2.53
						39	6.67	2.35	7.13	2.43	7.50	2.47	7.69	2.49	7.87	2.51	8.25	2.55	8.64	2.58
						42	6.45	2.43	6.91	2.51	7.28	2.55	7.46	2.57	7.65	2.59	8.03	2.63	8.42	2.67
						44	6.30	2.49	6.76	2.57	7.13	2.61	7.32	2.63	7.50	2.65	7.88	2.69	8.27	2.73
						46	6.15	2.55	6.61	2.63	6.98	2.67	7.17	2.69	7.36	2.71	7.74	2.75	8.12	2.79
2500	2500	2500		7500	94%	10	8.10	1.53	8.41	1.56	8.74	1.59	8.90	1.61	9.06	1.63	9.40	1.66	9.73	1.69
						12	7.96	1.57	8.27	1.60	8.60	1.64	8.76	1.65	8.93	1.67	9.26	1.70	9.60	1.73
						14	7.81	1.61	8.13	1.65	8.46	1.68	8.62	1.69	8.79	1.71	9.12	1.74	9.46	1.78
						16	7.68	1.65	7.99	1.69	8.32	1.72	8.48	1.74	8.65	1.75	8.98	1.79	9.32	1.82
						18	7.54	1.70	7.86	1.73	8.18	1.76	8.35	1.78	8.51	1.80	8.85	1.83	9.19	1.87
						20	7.40	1.74	7.72	1.78	8.04	1.81	8.21	1.83	8.37	1.84	8.71	1.88	9.05	1.91
						21	7.33	1.76	7.65	1.80	7.97	1.83	8.14	1.85	8.31	1.87	8.64	1.90	8.98	1.93
						23	7.19	1.81	7.51	1.84	7.84	1.88	8.00	1.89	8.17	1.91	8.50	1.95	8.85	1.98
						25	7.05	1.86	7.37	1.89	7.70	1.92	7.87	1.94	8.03	1.96	8.37	1.99	8.71	2.03
						27	6.91	1.90	7.24	1.94	7.56	1.97	7.73	1.99	7.90	2.01	8.23	2.04	8.58	2.07
						29	6.77	1.95	7.10	1.98	7.43	2.02	7.59	2.04	7.76	2.05	8.10	2.09	8.44	2.12
						31	6.64	2.00	6.96	2.03	7.29	2.07	7.46	2.08	7.62	2.10	7.96	2.14	8.31	2.17
						33	6.50	2.05	6.83	2.08	7.16	2.12	7.32	2.13	7.49	2.15	7.83	2.19	8.17	2.22
						35	6.36	2.10	6.69	2.13	7.02	2.17	7.20	2.18	7.36	2.20	7.70	2.24	8.04	2.27
						37	6.23	2.15	6.55	2.18	6.89	2.22	7.05	2.24	7.22	2.25	7.56	2.29	7.91	2.32
						39	6.09	2.20	6.42	2.23	6.75	2.27	6.92	2.29	7.09	2.31	7.43	2.34	7.77	2.38
						42	5.89	2.28	6.22	2.31	6.55	2.35	6.72	2.37	6.89	2.38	7.23	2.42	7.58	2.46
						44	5.75	2.33	6.08	2.37	6.42	2.40	6.58	2.42	6.75	2.44	7.10	2.47	7.44	2.51
						46	5.62	2.38	5.95	2.42	6.28	2.46	6.45	2.47	6.62	2.49	6.96	2.53	7.31	2.57

12. Capacity Table

12-4. AJ080TXJ4KH/EA

COOLING

Combination (Capacity Index)				Combination (Total)	Combination (%)	Outdoor Temperature (°C,DB)	Indoor Temperature (°C, WB)													
							14		16		18		19		20		22		24	
							TC(kW)	PI(kW)	TC(kW)	PI(kW)	TC(kW)	PI(kW)	TC(kW)	PI(kW)	TC(kW)	PI(kW)	TC(kW)	PI(kW)	TC(kW)	PI(kW)
2500	2500	3500		8500	106%	10	8.34	1.55	8.67	1.58	9.00	1.62	9.17	1.63	9.34	1.65	9.68	1.68	10.03	1.72
						12	8.20	1.59	8.53	1.63	8.86	1.66	9.03	1.68	9.20	1.69	9.54	1.73	9.89	1.76
						14	8.05	1.63	8.38	1.67	8.72	1.70	8.89	1.72	9.06	1.73	9.40	1.77	9.75	1.80
						16	7.91	1.68	8.24	1.71	8.57	1.74	8.74	1.76	8.91	1.78	9.26	1.81	9.61	1.85
						18	7.77	1.72	8.10	1.76	8.43	1.79	8.60	1.81	8.77	1.82	9.12	1.86	9.47	1.89
						20	7.62	1.77	7.95	1.80	8.29	1.83	8.46	1.85	8.63	1.87	8.98	1.90	9.33	1.94
						21	7.55	1.79	7.88	1.82	8.22	1.86	8.39	1.87	8.56	1.89	8.91	1.93	9.26	1.96
						23	7.41	1.83	7.74	1.87	8.08	1.90	8.25	1.92	8.42	1.94	8.76	1.97	9.12	2.01
						25	7.27	1.88	7.60	1.92	7.94	1.95	8.11	1.97	8.28	1.99	8.62	2.02	8.98	2.05
						27	7.12	1.93	7.46	1.96	7.79	2.00	7.97	2.02	8.14	2.03	8.49	2.07	8.84	2.10
						29	6.98	1.98	7.32	2.01	7.65	2.05	7.82	2.06	8.00	2.08	8.35	2.12	8.70	2.15
						31	6.84	2.03	7.17	2.06	7.51	2.10	7.69	2.11	7.86	2.13	8.21	2.17	8.56	2.20
						33	6.70	2.07	7.03	2.11	7.37	2.15	7.55	2.16	7.72	2.18	8.07	2.22	8.42	2.25
						35	6.56	2.13	6.89	2.16	7.23	2.20	7.42	2.21	7.58	2.23	7.93	2.27	8.29	2.30
						37	6.42	2.18	6.75	2.21	7.10	2.25	7.27	2.27	7.44	2.28	7.79	2.32	8.15	2.36
						39	6.28	2.23	6.61	2.26	6.96	2.30	7.13	2.32	7.30	2.34	7.66	2.37	8.01	2.41
						42	6.07	2.31	6.41	2.34	6.75	2.38	6.92	2.40	7.10	2.42	7.45	2.45	7.81	2.49
						44	5.93	2.36	6.27	2.40	6.61	2.44	6.79	2.45	6.96	2.47	7.31	2.51	7.67	2.55
						46	5.79	2.42	6.13	2.45	6.47	2.49	6.65	2.51	6.82	2.53	7.18	2.56	7.54	2.60
2500	2500	5000		10000	125%	10	8.74	1.60	9.08	1.63	9.43	1.67	9.60	1.68	9.78	1.70	10.14	1.74	10.50	1.77
						12	8.58	1.64	8.93	1.68	9.28	1.71	9.45	1.73	9.63	1.75	9.99	1.78	10.36	1.81
						14	8.43	1.69	8.78	1.72	9.13	1.76	9.30	1.77	9.48	1.79	9.84	1.82	10.21	1.86
						16	8.28	1.73	8.63	1.77	8.98	1.80	9.16	1.82	9.33	1.84	9.69	1.87	10.06	1.90
						18	8.13	1.78	8.48	1.81	8.83	1.85	9.01	1.86	9.18	1.88	9.55	1.92	9.91	1.95
						20	7.98	1.82	8.33	1.86	8.68	1.89	8.86	1.91	9.04	1.93	9.40	1.96	9.77	2.00
						21	7.91	1.85	8.25	1.88	8.61	1.92	8.78	1.93	8.96	1.95	9.33	1.99	9.69	2.02
						23	7.76	1.89	8.10	1.93	8.46	1.96	8.64	1.98	8.82	2.00	9.18	2.03	9.55	2.07
						25	7.61	1.94	7.96	1.98	8.31	2.01	8.49	2.03	8.67	2.05	9.03	2.08	9.40	2.12
						27	7.46	1.99	7.81	2.03	8.16	2.06	8.34	2.08	8.52	2.10	8.89	2.13	9.25	2.17
						29	7.31	2.04	7.66	2.08	8.01	2.11	8.19	2.13	8.37	2.15	8.74	2.18	9.11	2.22
						31	7.16	2.09	7.51	2.13	7.87	2.16	8.05	2.18	8.23	2.20	8.59	2.24	8.96	2.27
						33	7.02	2.14	7.37	2.18	7.72	2.21	7.90	2.23	8.08	2.25	8.45	2.29	8.82	2.32
						35	6.87	2.19	7.22	2.23	7.58	2.27	7.77	2.28	7.94	2.30	8.30	2.34	8.68	2.38
						37	6.72	2.25	7.07	2.28	7.43	2.32	7.61	2.34	7.79	2.36	8.16	2.39	8.53	2.43
						39	6.57	2.30	6.93	2.34	7.28	2.37	7.47	2.39	7.65	2.41	8.02	2.45	8.39	2.49
						42	6.36	2.38	6.71	2.42	7.07	2.46	7.25	2.48	7.43	2.49	7.80	2.53	8.18	2.57
						44	6.21	2.44	6.56	2.47	6.92	2.51	7.11	2.53	7.29	2.55	7.66	2.59	8.03	2.63
						46	6.06	2.49	6.42	2.53	6.78	2.57	6.96	2.59	7.14	2.61	7.52	2.65	7.89	2.68

12. Capacity Table

12-4. AJ080TXJ4KH/EA

COOLING

Combination (Capacity Index)				Combination (Total)	Combination (%)	Outdoor Temperature (°C,DB)	Indoor Temperature (°C, WB)													
							14		16		18		19		20		22		24	
							TC(kW)	PI(kW)	TC(kW)	PI(kW)	TC(kW)	PI(kW)	TC(kW)	PI(kW)	TC(kW)	PI(kW)	TC(kW)	PI(kW)	TC(kW)	PI(kW)
						10	8.74	1.60	9.35	1.70	9.71	1.73	9.89	1.75	10.07	1.77	10.44	1.80	10.81	1.84
						12	8.58	1.64	9.19	1.74	9.55	1.78	9.73	1.80	9.92	1.81	10.29	1.85	10.66	1.89
						14	8.43	1.69	9.04	1.79	9.40	1.82	9.58	1.84	9.76	1.86	10.13	1.90	10.51	1.93
						16	8.28	1.73	8.88	1.84	9.24	1.87	9.43	1.89	9.61	1.91	9.98	1.94	10.36	1.98
						18	8.13	1.78	8.73	1.88	9.09	1.92	9.27	1.94	9.46	1.96	9.83	1.99	10.21	2.03
						20	7.98	1.82	8.57	1.93	8.94	1.97	9.12	1.99	9.30	2.00	9.68	2.04	10.05	2.08
						21	7.91	1.85	8.50	1.95	8.86	1.99	9.04	2.01	9.23	2.03	9.60	2.07	9.98	2.10
						23	7.76	1.89	8.34	2.00	8.71	2.04	8.89	2.06	9.08	2.08	9.45	2.12	9.83	2.15
						25	7.61	1.94	8.19	2.05	8.56	2.09	8.74	2.11	8.92	2.13	9.30	2.17	9.68	2.20
2500	2500	6800		11800	148%	27	7.46	1.99	8.04	2.11	8.40	2.14	8.59	2.16	8.77	2.18	9.15	2.22	9.53	2.26
						29	7.31	2.04	7.89	2.16	8.25	2.19	8.44	2.21	8.62	2.23	9.00	2.27	9.38	2.31
						31	7.16	2.09	7.74	2.21	8.10	2.25	8.29	2.27	8.47	2.29	8.85	2.32	9.23	2.36
						33	7.02	2.14	7.58	2.26	7.95	2.30	8.14	2.32	8.32	2.34	8.70	2.38	9.08	2.42
						35	6.87	2.19	7.43	2.32	7.80	2.36	8.00	2.37	8.17	2.39	8.55	2.43	8.93	2.47
						37	6.72	2.25	7.28	2.37	7.65	2.41	7.84	2.43	8.02	2.45	8.40	2.49	8.79	2.53
						39	6.57	2.30	7.13	2.43	7.50	2.47	7.69	2.49	7.87	2.51	8.25	2.55	8.64	2.58
						42	6.36	2.38	6.91	2.51	7.28	2.55	7.46	2.57	7.65	2.59	8.03	2.63	8.42	2.67
						44	6.21	2.44	6.76	2.57	7.13	2.61	7.32	2.63	7.50	2.65	7.88	2.69	8.27	2.73
						46	6.06	2.49	6.61	2.63	6.98	2.67	7.17	2.69	7.36	2.71	7.74	2.75	8.12	2.79
						10	8.60	1.58	8.94	1.61	9.28	1.65	9.46	1.66	9.63	1.68	9.98	1.71	10.34	1.75
						12	8.45	1.62	8.79	1.65	9.13	1.69	9.31	1.71	9.48	1.72	9.84	1.76	10.20	1.79
						14	8.30	1.66	8.64	1.70	8.99	1.73	9.16	1.75	9.34	1.77	9.69	1.80	10.05	1.83
						16	8.15	1.71	8.49	1.74	8.84	1.78	9.01	1.79	9.19	1.81	9.54	1.85	9.90	1.88
						18	8.01	1.75	8.35	1.79	8.69	1.82	8.87	1.84	9.04	1.86	9.40	1.89	9.76	1.93
						20	7.86	1.80	8.20	1.83	8.55	1.87	8.72	1.88	8.90	1.90	9.25	1.94	9.61	1.97
						21	7.78	1.82	8.13	1.86	8.47	1.89	8.65	1.91	8.82	1.93	9.18	1.96	9.54	2.00
						23	7.64	1.87	7.98	1.90	8.33	1.94	8.50	1.96	8.68	1.97	9.04	2.01	9.40	2.04
						25	7.49	1.91	7.83	1.95	8.18	1.99	8.36	2.00	8.53	2.02	8.89	2.06	9.26	2.09
2500	3500	3500		9500	119%	27	7.34	1.96	7.69	2.00	8.04	2.03	8.21	2.05	8.39	2.07	8.75	2.11	9.11	2.14
						29	7.20	2.01	7.54	2.05	7.89	2.08	8.07	2.10	8.25	2.12	8.60	2.16	8.97	2.19
						31	7.05	2.06	7.40	2.10	7.75	2.13	7.92	2.15	8.10	2.17	8.46	2.21	8.83	2.24
						33	6.91	2.11	7.25	2.15	7.60	2.18	7.78	2.20	7.96	2.22	8.32	2.26	8.68	2.29
						35	6.76	2.16	7.11	2.20	7.46	2.24	7.65	2.25	7.81	2.27	8.18	2.31	8.54	2.35
						37	6.62	2.22	6.96	2.25	7.32	2.29	7.49	2.31	7.67	2.33	8.03	2.36	8.40	2.40
						39	6.47	2.27	6.82	2.31	7.17	2.34	7.35	2.36	7.53	2.38	7.89	2.42	8.26	2.45
						42	6.26	2.35	6.61	2.39	6.96	2.42	7.14	2.44	7.32	2.46	7.68	2.50	8.05	2.54
						44	6.11	2.40	6.46	2.44	6.82	2.48	7.00	2.50	7.18	2.52	7.54	2.55	7.91	2.59
						46	5.97	2.46	6.32	2.50	6.67	2.54	6.85	2.55	7.03	2.57	7.40	2.61	7.77	2.65

12. Capacity Table

12-4. AJ080TXJ4KH/EA

COOLING

Combination (Capacity Index)				Combination (Total)	Combination (%)	Outdoor Temperature (°C,DB)	Indoor Temperature (°C, WB)													
							14		16		18		19		20		22		24	
							TC(kW)	PI(kW)	TC(kW)	PI(kW)	TC(kW)	PI(kW)	TC(kW)	PI(kW)	TC(kW)	PI(kW)	TC(kW)	PI(kW)	TC(kW)	PI(kW)
2500	3500	5000		11000	138%	10	9.00	1.63	9.35	1.67	9.71	1.70	9.89	1.72	10.07	1.74	10.44	1.77	10.81	1.81
						12	8.84	1.68	9.19	1.71	9.55	1.75	9.73	1.77	9.92	1.78	10.29	1.82	10.66	1.85
						14	8.68	1.72	9.04	1.76	9.40	1.79	9.58	1.81	9.76	1.83	10.13	1.86	10.51	1.90
						16	8.53	1.77	8.88	1.80	9.24	1.84	9.43	1.86	9.61	1.88	9.98	1.91	10.36	1.95
						18	8.37	1.81	8.73	1.85	9.09	1.89	9.27	1.90	9.46	1.92	9.83	1.96	10.21	1.99
						20	8.22	1.86	8.57	1.90	8.94	1.93	9.12	1.95	9.30	1.97	9.68	2.01	10.05	2.04
						21	8.14	1.89	8.50	1.92	8.86	1.96	9.04	1.98	9.23	1.99	9.60	2.03	9.98	2.07
						23	7.99	1.93	8.34	1.97	8.71	2.01	8.89	2.02	9.08	2.04	9.45	2.08	9.83	2.12
						25	7.83	1.98	8.19	2.02	8.56	2.06	8.74	2.07	8.92	2.09	9.30	2.13	9.68	2.17
						27	7.68	2.03	8.04	2.07	8.40	2.11	8.59	2.12	8.77	2.14	9.15	2.18	9.53	2.22
						29	7.53	2.08	7.89	2.12	8.25	2.16	8.44	2.18	8.62	2.19	9.00	2.23	9.38	2.27
						31	7.37	2.14	7.74	2.17	8.10	2.21	8.29	2.23	8.47	2.25	8.85	2.28	9.23	2.32
						33	7.22	2.19	7.58	2.22	7.95	2.26	8.14	2.28	8.32	2.30	8.70	2.34	9.08	2.38
						35	7.07	2.24	7.43	2.28	7.80	2.32	8.00	2.33	8.17	2.35	8.55	2.39	8.93	2.43
						37	6.92	2.29	7.28	2.33	7.65	2.37	7.84	2.39	8.02	2.41	8.40	2.45	8.79	2.48
						39	6.77	2.35	7.13	2.39	7.50	2.43	7.69	2.44	7.87	2.46	8.25	2.50	8.64	2.54
						42	6.54	2.43	6.91	2.47	7.28	2.51	7.46	2.53	7.65	2.55	8.03	2.59	8.42	2.63
						44	6.39	2.49	6.76	2.53	7.13	2.57	7.32	2.59	7.50	2.61	7.88	2.65	8.27	2.68
						46	6.24	2.55	6.61	2.59	6.98	2.63	7.17	2.65	7.36	2.66	7.74	2.70	8.12	2.74
3500	3500	3500		10500	131%	10	8.87	1.63	9.22	1.67	9.57	1.70	9.75	1.72	9.93	1.74	10.30	1.77	10.67	1.81
						12	8.72	1.68	9.07	1.71	9.42	1.75	9.60	1.77	9.78	1.78	10.15	1.82	10.52	1.85
						14	8.56	1.72	8.91	1.76	9.27	1.79	9.45	1.81	9.63	1.83	9.99	1.86	10.37	1.90
						16	8.41	1.77	8.76	1.80	9.12	1.84	9.30	1.86	9.48	1.88	9.84	1.91	10.22	1.95
						18	8.26	1.81	8.61	1.85	8.97	1.89	9.15	1.90	9.33	1.92	9.69	1.96	10.07	1.99
						20	8.11	1.86	8.46	1.90	8.81	1.93	8.99	1.95	9.18	1.97	9.54	2.01	9.92	2.04
						21	8.03	1.89	8.38	1.92	8.74	1.96	8.92	1.98	9.10	1.99	9.47	2.03	9.84	2.07
						23	7.88	1.93	8.23	1.97	8.59	2.01	8.77	2.02	8.95	2.04	9.32	2.08	9.69	2.12
						25	7.73	1.98	8.08	2.02	8.44	2.06	8.62	2.07	8.80	2.09	9.17	2.13	9.55	2.17
						27	7.57	2.03	7.93	2.07	8.29	2.11	8.47	2.12	8.65	2.14	9.02	2.18	9.40	2.22
						29	7.42	2.08	7.78	2.12	8.14	2.16	8.32	2.18	8.50	2.19	8.87	2.23	9.25	2.27
						31	7.27	2.14	7.63	2.17	7.99	2.21	8.17	2.23	8.36	2.25	8.73	2.28	9.10	2.32
						33	7.12	2.19	7.48	2.22	7.84	2.26	8.02	2.28	8.21	2.30	8.58	2.34	8.96	2.38
						35	6.97	2.24	7.33	2.28	7.69	2.32	7.89	2.33	8.06	2.35	8.43	2.39	8.81	2.43
						37	6.82	2.29	7.18	2.33	7.54	2.37	7.73	2.39	7.91	2.41	8.29	2.45	8.66	2.48
						39	6.68	2.35	7.03	2.39	7.40	2.43	7.58	2.44	7.77	2.46	8.14	2.50	8.52	2.54
						42	6.45	2.43	6.81	2.47	7.18	2.51	7.36	2.53	7.55	2.55	7.92	2.59	8.30	2.63
						44	6.31	2.49	6.67	2.53	7.03	2.57	7.21	2.59	7.40	2.61	7.78	2.65	8.16	2.68
						46	6.16	2.55	6.52	2.59	6.88	2.63	7.07	2.65	7.26	2.66	7.63	2.70	8.01	2.74

12. Capacity Table

12-4. AJ080TXJ4KH/EA

COOLING

Combination (Capacity Index)				Combination (Total)	Combination (%)	Outdoor Temperature (°C,DB)	Indoor Temperature (°C, WB)													
							14		16		18		19		20		22		24	
							TC(kW)	PI(kW)	TC(kW)	PI(kW)	TC(kW)	PI(kW)	TC(kW)	PI(kW)	TC(kW)	PI(kW)	TC(kW)	PI(kW)	TC(kW)	PI(kW)
3500	3500	5000		12000	150%	10	9.00	1.66	9.35	1.70	9.71	1.73	9.89	1.75	10.07	1.77	10.44	1.80	10.81	1.84
						12	8.84	1.71	9.19	1.74	9.55	1.78	9.73	1.80	9.92	1.81	10.29	1.85	10.66	1.89
						14	8.68	1.75	9.04	1.79	9.40	1.82	9.58	1.84	9.76	1.86	10.13	1.90	10.51	1.93
						16	8.53	1.80	8.88	1.84	9.24	1.87	9.43	1.89	9.61	1.91	9.98	1.94	10.36	1.98
						18	8.37	1.85	8.73	1.88	9.09	1.92	9.27	1.94	9.46	1.96	9.83	1.99	10.21	2.03
						20	8.22	1.89	8.57	1.93	8.94	1.97	9.12	1.99	9.30	2.00	9.68	2.04	10.05	2.08
						21	8.14	1.92	8.50	1.95	8.86	1.99	9.04	2.01	9.23	2.03	9.60	2.07	9.98	2.10
						23	7.99	1.97	8.34	2.00	8.71	2.04	8.89	2.06	9.08	2.08	9.45	2.12	9.83	2.15
						25	7.83	2.02	8.19	2.05	8.56	2.09	8.74	2.11	8.92	2.13	9.30	2.17	9.68	2.20
						27	7.68	2.07	8.04	2.11	8.40	2.14	8.59	2.16	8.77	2.18	9.15	2.22	9.53	2.26
						29	7.53	2.12	7.89	2.16	8.25	2.19	8.44	2.21	8.62	2.23	9.00	2.27	9.38	2.31
						31	7.37	2.17	7.74	2.21	8.10	2.25	8.29	2.27	8.47	2.29	8.85	2.32	9.23	2.36
						33	7.22	2.22	7.58	2.26	7.95	2.30	8.14	2.32	8.32	2.34	8.70	2.38	9.08	2.42
						35	7.07	2.28	7.43	2.32	7.80	2.36	8.00	2.37	8.17	2.39	8.55	2.43	8.93	2.47
						37	6.92	2.33	7.28	2.37	7.65	2.41	7.84	2.43	8.02	2.45	8.40	2.49	8.79	2.53
						39	6.77	2.39	7.13	2.43	7.50	2.47	7.69	2.49	7.87	2.51	8.25	2.55	8.64	2.58
						42	6.54	2.47	6.91	2.51	7.28	2.55	7.46	2.57	7.65	2.59	8.03	2.63	8.42	2.67
						44	6.39	2.53	6.76	2.57	7.13	2.61	7.32	2.63	7.50	2.65	7.88	2.69	8.27	2.73
						46	6.24	2.59	6.61	2.63	6.98	2.67	7.17	2.69	7.36	2.71	7.74	2.75	8.12	2.79
2000	2000	2000	2000	8000	100%	10	8.23	1.55	8.55	1.58	8.88	1.62	9.05	1.63	9.21	1.65	9.55	1.68	9.90	1.72
						12	8.09	1.59	8.41	1.63	8.74	1.66	8.91	1.68	9.07	1.69	9.41	1.73	9.76	1.76
						14	7.95	1.63	8.27	1.67	8.60	1.70	8.77	1.72	8.93	1.73	9.27	1.77	9.62	1.80
						16	7.80	1.68	8.13	1.71	8.46	1.74	8.62	1.76	8.79	1.78	9.13	1.81	9.48	1.85
						18	7.66	1.72	7.99	1.76	8.32	1.79	8.48	1.81	8.65	1.82	8.99	1.86	9.34	1.89
						20	7.52	1.77	7.85	1.80	8.18	1.83	8.34	1.85	8.51	1.87	8.85	1.90	9.20	1.94
						21	7.45	1.79	7.78	1.82	8.11	1.86	8.27	1.87	8.44	1.89	8.79	1.93	9.13	1.96
						23	7.31	1.83	7.64	1.87	7.97	1.90	8.14	1.92	8.30	1.94	8.65	1.97	8.99	2.01
						25	7.17	1.88	7.50	1.92	7.83	1.95	8.00	1.97	8.17	1.99	8.51	2.02	8.86	2.05
						27	7.03	1.93	7.36	1.96	7.69	2.00	7.86	2.02	8.03	2.03	8.37	2.07	8.72	2.10
						29	6.89	1.98	7.22	2.01	7.55	2.05	7.72	2.06	7.89	2.08	8.23	2.12	8.58	2.15
						31	6.75	2.03	7.08	2.06	7.41	2.10	7.58	2.11	7.75	2.13	8.10	2.17	8.45	2.20
						33	6.61	2.07	6.94	2.11	7.27	2.15	7.44	2.16	7.61	2.18	7.96	2.22	8.31	2.25
						35	6.47	2.13	6.80	2.16	7.14	2.20	7.32	2.21	7.48	2.23	7.82	2.27	8.17	2.30
						37	6.33	2.18	6.66	2.21	7.00	2.25	7.17	2.27	7.34	2.28	7.69	2.32	8.04	2.36
						39	6.19	2.23	6.53	2.26	6.86	2.30	7.03	2.32	7.21	2.34	7.55	2.37	7.90	2.41
						42	5.99	2.31	6.32	2.34	6.66	2.38	6.83	2.40	7.00	2.42	7.35	2.45	7.70	2.49
						44	5.85	2.36	6.18	2.40	6.52	2.44	6.69	2.45	6.87	2.47	7.21	2.51	7.57	2.55
						46	5.71	2.42	6.05	2.45	6.39	2.49	6.56	2.51	6.73	2.53	7.08	2.56	7.43	2.60

12. Capacity Table

12-4. AJ080TXJ4KH/EA

COOLING

Combination (Capacity Index)				Combination (Total)	Combination (%)	Outdoor Temperature (°C,DB)	Indoor Temperature (°C, WB)													
							14		16		18		19		20		22		24	
							TC(kW)	PI(kW)	TC(kW)	PI(kW)	TC(kW)	PI(kW)	TC(kW)	PI(kW)	TC(kW)	PI(kW)	TC(kW)	PI(kW)	TC(kW)	PI(kW)
2000	2000	2000	2500	8500	106%	10	8.37	1.55	8.69	1.58	9.03	1.62	9.20	1.63	9.37	1.65	9.71	1.68	10.06	1.72
						12	8.22	1.59	8.55	1.63	8.88	1.66	9.05	1.68	9.22	1.69	9.57	1.73	9.92	1.76
						14	8.08	1.63	8.41	1.67	8.74	1.70	8.91	1.72	9.08	1.73	9.42	1.77	9.77	1.80
						16	7.93	1.68	8.26	1.71	8.60	1.74	8.77	1.76	8.94	1.78	9.28	1.81	9.63	1.85
						18	7.79	1.72	8.12	1.76	8.45	1.79	8.62	1.81	8.79	1.82	9.14	1.86	9.49	1.89
						20	7.64	1.77	7.97	1.80	8.31	1.83	8.48	1.85	8.65	1.87	9.00	1.90	9.35	1.94
						21	7.57	1.79	7.90	1.82	8.24	1.86	8.41	1.87	8.58	1.89	8.93	1.93	9.28	1.96
						23	7.43	1.83	7.76	1.87	8.10	1.90	8.27	1.92	8.44	1.94	8.79	1.97	9.14	2.01
						25	7.29	1.88	7.62	1.92	7.96	1.95	8.13	1.97	8.30	1.99	8.65	2.02	9.00	2.05
						27	7.14	1.93	7.48	1.96	7.82	2.00	7.99	2.02	8.16	2.03	8.51	2.07	8.86	2.10
						29	7.00	1.98	7.33	2.01	7.67	2.05	7.85	2.06	8.02	2.08	8.37	2.12	8.72	2.15
						31	6.86	2.03	7.19	2.06	7.53	2.10	7.71	2.11	7.88	2.13	8.23	2.17	8.58	2.20
						33	6.72	2.07	7.05	2.11	7.39	2.15	7.57	2.16	7.74	2.18	8.09	2.22	8.45	2.25
						35	6.58	2.13	6.91	2.16	7.25	2.20	7.44	2.21	7.60	2.23	7.95	2.27	8.31	2.30
						37	6.44	2.18	6.77	2.21	7.11	2.25	7.29	2.27	7.46	2.28	7.81	2.32	8.17	2.36
						39	6.30	2.23	6.63	2.26	6.98	2.30	7.15	2.32	7.32	2.34	7.68	2.37	8.03	2.41
						42	6.09	2.31	6.42	2.34	6.77	2.38	6.94	2.40	7.12	2.42	7.47	2.45	7.83	2.49
						44	5.95	2.36	6.29	2.40	6.63	2.44	6.80	2.45	6.98	2.47	7.33	2.51	7.69	2.55
						46	5.81	2.42	6.15	2.45	6.49	2.49	6.67	2.51	6.84	2.53	7.20	2.56	7.56	2.60
2000	2000	2000	3500	9500	119%	10	8.60	1.58	8.94	1.61	9.28	1.65	9.46	1.66	9.63	1.68	9.98	1.71	10.34	1.75
						12	8.45	1.62	8.79	1.65	9.13	1.69	9.31	1.71	9.48	1.72	9.84	1.76	10.20	1.79
						14	8.30	1.66	8.64	1.70	8.99	1.73	9.16	1.75	9.34	1.77	9.69	1.80	10.05	1.83
						16	8.15	1.71	8.49	1.74	8.84	1.78	9.01	1.79	9.19	1.81	9.54	1.85	9.90	1.88
						18	8.01	1.75	8.35	1.79	8.69	1.82	8.87	1.84	9.04	1.86	9.40	1.89	9.76	1.93
						20	7.86	1.80	8.20	1.83	8.55	1.87	8.72	1.88	8.90	1.90	9.25	1.94	9.61	1.97
						21	7.78	1.82	8.13	1.86	8.47	1.89	8.65	1.91	8.82	1.93	9.18	1.96	9.54	2.00
						23	7.64	1.87	7.98	1.90	8.33	1.94	8.50	1.96	8.68	1.97	9.04	2.01	9.40	2.04
						25	7.49	1.91	7.83	1.95	8.18	1.99	8.36	2.00	8.53	2.02	8.89	2.06	9.26	2.09
						27	7.34	1.96	7.69	2.00	8.04	2.03	8.21	2.05	8.39	2.07	8.75	2.11	9.11	2.14
						29	7.20	2.01	7.54	2.05	7.89	2.08	8.07	2.10	8.25	2.12	8.60	2.16	8.97	2.19
						31	7.05	2.06	7.40	2.10	7.75	2.13	7.92	2.15	8.10	2.17	8.46	2.21	8.83	2.24
						33	6.91	2.11	7.25	2.15	7.60	2.18	7.78	2.20	7.96	2.22	8.32	2.26	8.68	2.29
						35	6.76	2.16	7.11	2.20	7.46	2.24	7.65	2.25	7.81	2.27	8.18	2.31	8.54	2.35
						37	6.62	2.22	6.96	2.25	7.32	2.29	7.49	2.31	7.67	2.33	8.03	2.36	8.40	2.40
						39	6.47	2.27	6.82	2.31	7.17	2.34	7.35	2.36	7.53	2.38	7.89	2.42	8.26	2.45
						42	6.26	2.35	6.61	2.39	6.96	2.42	7.14	2.44	7.32	2.46	7.68	2.50	8.05	2.54
						44	6.11	2.40	6.46	2.44	6.82	2.48	7.00	2.50	7.18	2.52	7.54	2.55	7.91	2.59
						46	5.97	2.46	6.32	2.50	6.67	2.54	6.85	2.55	7.03	2.57	7.40	2.61	7.77	2.65

12. Capacity Table

12-4. AJ080TXJ4KH/EA

COOLING

Combination (Capacity Index)				Combination (Total)	Combination (%)	Outdoor Temperature (°C,DB)	Indoor Temperature (°C, WB)													
							14		16		18		19		20		22		24	
							TC(kW)	PI(kW)	TC(kW)	PI(kW)	TC(kW)	PI(kW)	TC(kW)	PI(kW)	TC(kW)	PI(kW)	TC(kW)	PI(kW)	TC(kW)	PI(kW)
2000	2000	2000	5000	11000	138%	10	9.00	1.67	9.35	1.71	9.71	1.74	9.89	1.76	10.07	1.78	10.44	1.81	10.81	1.85
						12	8.84	1.71	9.19	1.75	9.55	1.79	9.73	1.80	9.92	1.82	10.29	1.86	10.66	1.89
						14	8.68	1.76	9.04	1.80	9.40	1.83	9.58	1.85	9.76	1.87	10.13	1.90	10.51	1.94
						16	8.53	1.81	8.88	1.84	9.24	1.88	9.43	1.90	9.61	1.92	9.98	1.95	10.36	1.99
						18	8.37	1.85	8.73	1.89	9.09	1.93	9.27	1.95	9.46	1.96	9.83	2.00	10.21	2.04
						20	8.22	1.90	8.57	1.94	8.94	1.98	9.12	1.99	9.30	2.01	9.68	2.05	10.05	2.09
						21	8.14	1.93	8.50	1.96	8.86	2.00	9.04	2.02	9.23	2.04	9.60	2.07	9.98	2.11
						23	7.99	1.98	8.34	2.01	8.71	2.05	8.89	2.07	9.08	2.09	9.45	2.12	9.83	2.16
						25	7.83	2.03	8.19	2.06	8.56	2.10	8.74	2.12	8.92	2.14	9.30	2.18	9.68	2.21
						27	7.68	2.08	8.04	2.11	8.40	2.15	8.59	2.17	8.77	2.19	9.15	2.23	9.53	2.26
						29	7.53	2.13	7.89	2.17	8.25	2.20	8.44	2.22	8.62	2.24	9.00	2.28	9.38	2.32
						31	7.37	2.18	7.74	2.22	8.10	2.26	8.29	2.28	8.47	2.30	8.85	2.33	9.23	2.37
						33	7.22	2.23	7.58	2.27	7.95	2.31	8.14	2.33	8.32	2.35	8.70	2.39	9.08	2.43
						35	7.07	2.29	7.43	2.33	7.80	2.37	8.00	2.38	8.17	2.40	8.55	2.44	8.93	2.48
						37	6.92	2.34	7.28	2.38	7.65	2.42	7.84	2.44	8.02	2.46	8.40	2.50	8.79	2.54
						39	6.77	2.40	7.13	2.44	7.50	2.48	7.69	2.50	7.87	2.52	8.25	2.56	8.64	2.59
						42	6.54	2.49	6.91	2.52	7.28	2.56	7.46	2.58	7.65	2.60	8.03	2.64	8.42	2.68
						44	6.39	2.54	6.76	2.58	7.13	2.62	7.32	2.64	7.50	2.66	7.88	2.70	8.27	2.74
						46	6.24	2.60	6.61	2.64	6.98	2.68	7.17	2.70	7.36	2.72	7.74	2.76	8.12	2.80
2000	2000	2500	2500	9000	113%	10	8.48	1.59	8.81	1.62	9.15	1.65	9.32	1.67	9.49	1.69	9.84	1.72	10.19	1.75
						12	8.33	1.63	8.66	1.66	9.00	1.70	9.17	1.71	9.35	1.73	9.70	1.76	10.05	1.80
						14	8.18	1.67	8.52	1.71	8.86	1.74	9.03	1.76	9.20	1.77	9.55	1.81	9.91	1.84
						16	8.04	1.72	8.37	1.75	8.71	1.78	8.88	1.80	9.06	1.82	9.41	1.85	9.76	1.89
						18	7.89	1.76	8.23	1.79	8.57	1.83	8.74	1.85	8.91	1.86	9.26	1.90	9.62	1.93
						20	7.75	1.81	8.08	1.84	8.42	1.88	8.60	1.89	8.77	1.91	9.12	1.95	9.48	1.98
						21	7.67	1.83	8.01	1.86	8.35	1.90	8.52	1.92	8.70	1.93	9.05	1.97	9.41	2.00
						23	7.53	1.88	7.86	1.91	8.21	1.95	8.38	1.96	8.55	1.98	8.91	2.02	9.26	2.05
						25	7.38	1.92	7.72	1.96	8.06	1.99	8.24	2.01	8.41	2.03	8.76	2.07	9.12	2.10
						27	7.24	1.97	7.58	2.01	7.92	2.04	8.09	2.06	8.27	2.08	8.62	2.11	8.98	2.15
						29	7.09	2.02	7.43	2.06	7.78	2.09	7.95	2.11	8.13	2.13	8.48	2.16	8.84	2.20
						31	6.95	2.07	7.29	2.11	7.64	2.14	7.81	2.16	7.98	2.18	8.34	2.22	8.70	2.25
						33	6.81	2.12	7.15	2.16	7.49	2.19	7.67	2.21	7.84	2.23	8.20	2.27	8.56	2.30
						35	6.66	2.17	7.01	2.21	7.35	2.25	7.54	2.26	7.70	2.28	8.06	2.32	8.42	2.36
						37	6.52	2.23	6.86	2.26	7.21	2.30	7.39	2.32	7.56	2.34	7.92	2.37	8.28	2.41
						39	6.38	2.28	6.72	2.32	7.07	2.35	7.24	2.37	7.42	2.39	7.78	2.43	8.14	2.46
						42	6.17	2.36	6.51	2.40	6.86	2.43	7.03	2.45	7.21	2.47	7.57	2.51	7.93	2.55
						44	6.03	2.42	6.37	2.45	6.72	2.49	6.89	2.51	7.07	2.53	7.43	2.57	7.80	2.60
						46	5.88	2.47	6.23	2.51	6.58	2.55	6.76	2.57	6.93	2.58	7.29	2.62	7.66	2.66

12. Capacity Table

12-4. AJ080TXJ4KH/EA

COOLING

Combination (Capacity Index)				Combination (Total)	Combination (%)	Outdoor Temperature (°C,DB)	Indoor Temperature (°C, WB)													
							14		16		18		19		20		22		24	
							TC(kW)	PI(kW)	TC(kW)	PI(kW)	TC(kW)	PI(kW)	TC(kW)	PI(kW)	TC(kW)	PI(kW)	TC(kW)	PI(kW)	TC(kW)	PI(kW)
2000	2000	2500	3500	10000	125%	10	8.73	1.59	9.07	1.63	9.42	1.66	9.59	1.68	9.77	1.69	10.13	1.73	10.49	1.76
						12	8.57	1.64	8.92	1.67	9.27	1.70	9.44	1.72	9.62	1.74	9.98	1.77	10.34	1.81
						14	8.42	1.68	8.77	1.71	9.12	1.75	9.29	1.76	9.47	1.78	9.83	1.82	10.19	1.85
						16	8.27	1.72	8.62	1.76	8.97	1.79	9.14	1.81	9.32	1.83	9.68	1.86	10.05	1.90
						18	8.12	1.77	8.47	1.80	8.82	1.84	8.99	1.86	9.17	1.87	9.53	1.91	9.90	1.94
						20	7.97	1.81	8.32	1.85	8.67	1.88	8.85	1.90	9.03	1.92	9.39	1.95	9.75	1.99
						21	7.90	1.84	8.24	1.87	8.59	1.91	8.77	1.93	8.95	1.94	9.31	1.98	9.68	2.01
						23	7.75	1.88	8.09	1.92	8.45	1.95	8.62	1.97	8.80	1.99	9.17	2.03	9.53	2.06
						25	7.60	1.93	7.95	1.97	8.30	2.00	8.48	2.02	8.66	2.04	9.02	2.07	9.39	2.11
						27	7.45	1.98	7.80	2.02	8.15	2.05	8.33	2.07	8.51	2.09	8.87	2.12	9.24	2.16
						29	7.30	2.03	7.65	2.07	8.00	2.10	8.18	2.12	8.36	2.14	8.73	2.17	9.10	2.21
						31	7.15	2.08	7.50	2.12	7.86	2.15	8.04	2.17	8.22	2.19	8.58	2.23	8.95	2.26
						33	7.01	2.13	7.36	2.17	7.71	2.20	7.89	2.22	8.07	2.24	8.44	2.28	8.81	2.31
						35	6.86	2.18	7.21	2.22	7.57	2.26	7.76	2.27	7.93	2.29	8.29	2.33	8.67	2.37
						37	6.71	2.24	7.06	2.27	7.42	2.31	7.60	2.33	7.78	2.35	8.15	2.38	8.52	2.42
						39	6.57	2.29	6.92	2.33	7.28	2.36	7.46	2.38	7.64	2.40	8.01	2.44	8.38	2.48
						42	6.35	2.37	6.70	2.41	7.06	2.45	7.24	2.46	7.42	2.48	7.79	2.52	8.16	2.56
						44	6.20	2.43	6.56	2.46	6.91	2.50	7.10	2.52	7.28	2.54	7.65	2.58	8.02	2.61
						46	6.06	2.48	6.41	2.52	6.77	2.56	6.95	2.58	7.14	2.60	7.51	2.63	7.88	2.67
2000	2000	2500	5000	11500	144%	10	9.00	1.67	9.35	1.71	9.71	1.74	9.89	1.76	10.07	1.78	10.44	1.81	10.81	1.85
						12	8.84	1.71	9.19	1.75	9.55	1.79	9.73	1.80	9.92	1.82	10.29	1.86	10.66	1.89
						14	8.68	1.76	9.04	1.80	9.40	1.83	9.58	1.85	9.76	1.87	10.13	1.90	10.51	1.94
						16	8.53	1.81	8.88	1.84	9.24	1.88	9.43	1.90	9.61	1.92	9.98	1.95	10.36	1.99
						18	8.37	1.85	8.73	1.89	9.09	1.93	9.27	1.95	9.46	1.96	9.83	2.00	10.21	2.04
						20	8.22	1.90	8.57	1.94	8.94	1.98	9.12	1.99	9.30	2.01	9.68	2.05	10.05	2.09
						21	8.14	1.93	8.50	1.96	8.86	2.00	9.04	2.02	9.23	2.04	9.60	2.07	9.98	2.11
						23	7.99	1.98	8.34	2.01	8.71	2.05	8.89	2.07	9.08	2.09	9.45	2.12	9.83	2.16
						25	7.83	2.03	8.19	2.06	8.56	2.10	8.74	2.12	8.92	2.14	9.30	2.18	9.68	2.21
						27	7.68	2.08	8.04	2.11	8.40	2.15	8.59	2.17	8.77	2.19	9.15	2.23	9.53	2.26
						29	7.53	2.13	7.89	2.17	8.25	2.20	8.44	2.22	8.62	2.24	9.00	2.28	9.38	2.32
						31	7.37	2.18	7.74	2.22	8.10	2.26	8.29	2.28	8.47	2.30	8.85	2.33	9.23	2.37
						33	7.22	2.23	7.58	2.27	7.95	2.31	8.14	2.33	8.32	2.35	8.70	2.39	9.08	2.43
						35	7.07	2.29	7.43	2.33	7.80	2.37	8.00	2.38	8.17	2.40	8.55	2.44	8.93	2.48
						37	6.92	2.34	7.28	2.38	7.65	2.42	7.84	2.44	8.02	2.46	8.40	2.50	8.79	2.54
						39	6.77	2.40	7.13	2.44	7.50	2.48	7.69	2.50	7.87	2.52	8.25	2.56	8.64	2.59
						42	6.54	2.49	6.91	2.52	7.28	2.56	7.46	2.58	7.65	2.60	8.03	2.64	8.42	2.68
						44	6.39	2.54	6.76	2.58	7.13	2.62	7.32	2.64	7.50	2.66	7.88	2.70	8.27	2.74
						46	6.24	2.60	6.61	2.64	6.98	2.68	7.17	2.70	7.36	2.72	7.74	2.76	8.12	2.80

12. Capacity Table

12-4. AJ080TXJ4KH/EA

COOLING

Combination (Capacity Index)				Combination (Total)	Combination (%)	Outdoor Temperature (°C,DB)	Indoor Temperature (°C, WB)													
							14		16		18		19		20		22		24	
							TC(kW)	PI(kW)	TC(kW)	PI(kW)	TC(kW)	PI(kW)	TC(kW)	PI(kW)	TC(kW)	PI(kW)	TC(kW)	PI(kW)	TC(kW)	PI(kW)
2000	2000	3500	3500	11000	138%	10	9.00	1.65	9.35	1.68	9.71	1.72	9.89	1.74	10.07	1.75	10.44	1.79	10.81	1.82
						12	8.84	1.69	9.19	1.73	9.55	1.76	9.73	1.78	9.92	1.80	10.29	1.83	10.66	1.87
						14	8.68	1.74	9.04	1.77	9.40	1.81	9.58	1.83	9.76	1.84	10.13	1.88	10.51	1.92
						16	8.53	1.78	8.88	1.82	9.24	1.86	9.43	1.87	9.61	1.89	9.98	1.93	10.36	1.96
						18	8.37	1.83	8.73	1.87	9.09	1.90	9.27	1.92	9.46	1.94	9.83	1.97	10.21	2.01
						20	8.22	1.88	8.57	1.91	8.94	1.95	9.12	1.97	9.30	1.99	9.68	2.02	10.05	2.06
						21	8.14	1.90	8.50	1.94	8.86	1.97	9.04	1.99	9.23	2.01	9.60	2.05	9.98	2.08
						23	7.99	1.95	8.34	1.99	8.71	2.02	8.89	2.04	9.08	2.06	9.45	2.10	9.83	2.13
						25	7.83	2.00	8.19	2.04	8.56	2.07	8.74	2.09	8.92	2.11	9.30	2.15	9.68	2.18
						27	7.68	2.05	8.04	2.09	8.40	2.12	8.59	2.14	8.77	2.16	9.15	2.20	9.53	2.24
						29	7.53	2.10	7.89	2.14	8.25	2.18	8.44	2.19	8.62	2.21	9.00	2.25	9.38	2.29
						31	7.37	2.15	7.74	2.19	8.10	2.23	8.29	2.25	8.47	2.27	8.85	2.30	9.23	2.34
						33	7.22	2.21	7.58	2.24	7.95	2.28	8.14	2.30	8.32	2.32	8.70	2.36	9.08	2.40
						35	7.07	2.26	7.43	2.30	7.80	2.34	8.00	2.35	8.17	2.37	8.55	2.41	8.93	2.45
						37	6.92	2.31	7.28	2.35	7.65	2.39	7.84	2.41	8.02	2.43	8.40	2.47	8.79	2.51
						39	6.77	2.37	7.13	2.41	7.50	2.45	7.69	2.47	7.87	2.49	8.25	2.52	8.64	2.56
						42	6.54	2.45	6.91	2.49	7.28	2.53	7.46	2.55	7.65	2.57	8.03	2.61	8.42	2.65
						44	6.39	2.51	6.76	2.55	7.13	2.59	7.32	2.61	7.50	2.63	7.88	2.67	8.27	2.71
						46	6.24	2.57	6.61	2.61	6.98	2.65	7.17	2.67	7.36	2.69	7.74	2.73	8.12	2.77
2000	2500	2500	2500	9500	119%	10	8.60	1.59	8.94	1.62	9.28	1.65	9.46	1.67	9.63	1.69	9.98	1.72	10.34	1.75
						12	8.45	1.63	8.79	1.66	9.13	1.70	9.31	1.71	9.48	1.73	9.84	1.76	10.20	1.80
						14	8.30	1.67	8.64	1.71	8.99	1.74	9.16	1.76	9.34	1.77	9.69	1.81	10.05	1.84
						16	8.15	1.72	8.49	1.75	8.84	1.78	9.01	1.80	9.19	1.82	9.54	1.85	9.90	1.89
						18	8.01	1.76	8.35	1.79	8.69	1.83	8.87	1.85	9.04	1.86	9.40	1.90	9.76	1.93
						20	7.86	1.81	8.20	1.84	8.55	1.88	8.72	1.89	8.90	1.91	9.25	1.95	9.61	1.98
						21	7.78	1.83	8.13	1.86	8.47	1.90	8.65	1.92	8.82	1.93	9.18	1.97	9.54	2.00
						23	7.64	1.88	7.98	1.91	8.33	1.95	8.50	1.96	8.68	1.98	9.04	2.02	9.40	2.05
						25	7.49	1.92	7.83	1.96	8.18	1.99	8.36	2.01	8.53	2.03	8.89	2.07	9.26	2.10
						27	7.34	1.97	7.69	2.01	8.04	2.04	8.21	2.06	8.39	2.08	8.75	2.11	9.11	2.15
						29	7.20	2.02	7.54	2.06	7.89	2.09	8.07	2.11	8.25	2.13	8.60	2.16	8.97	2.20
						31	7.05	2.07	7.40	2.11	7.75	2.14	7.92	2.16	8.10	2.18	8.46	2.22	8.83	2.25
						33	6.91	2.12	7.25	2.16	7.60	2.19	7.78	2.21	7.96	2.23	8.32	2.27	8.68	2.30
						35	6.76	2.17	7.11	2.21	7.46	2.25	7.65	2.26	7.81	2.28	8.18	2.32	8.54	2.36
						37	6.62	2.23	6.96	2.26	7.32	2.30	7.49	2.32	7.67	2.34	8.03	2.37	8.40	2.41
						39	6.47	2.28	6.82	2.32	7.17	2.35	7.35	2.37	7.53	2.39	7.89	2.43	8.26	2.46
						42	6.26	2.36	6.61	2.40	6.96	2.43	7.14	2.45	7.32	2.47	7.68	2.51	8.05	2.55
						44	6.11	2.42	6.46	2.45	6.82	2.49	7.00	2.51	7.18	2.53	7.54	2.57	7.91	2.60
						46	5.97	2.47	6.32	2.51	6.67	2.55	6.85	2.57	7.03	2.58	7.40	2.62	7.77	2.66

12. Capacity Table

12-4. AJ080TXJ4KH/EA

COOLING

Combination (Capacity Index)				Combination (Total)	Combination (%)	Outdoor Temperature (°C,DB)	Indoor Temperature (°C, WB)													
							14		16		18		19		20		22		24	
							TC(kW)	PI(kW)	TC(kW)	PI(kW)	TC(kW)	PI(kW)	TC(kW)	PI(kW)	TC(kW)	PI(kW)	TC(kW)	PI(kW)	TC(kW)	PI(kW)
2000	2500	2500	3500	10500	131%	10	8.87	1.63	9.22	1.67	9.57	1.70	9.75	1.72	9.93	1.74	10.30	1.77	10.67	1.81
						12	8.72	1.68	9.07	1.71	9.42	1.75	9.60	1.77	9.78	1.78	10.15	1.82	10.52	1.85
						14	8.56	1.72	8.91	1.76	9.27	1.79	9.45	1.81	9.63	1.83	9.99	1.86	10.37	1.90
						16	8.41	1.77	8.76	1.80	9.12	1.84	9.30	1.86	9.48	1.88	9.84	1.91	10.22	1.95
						18	8.26	1.81	8.61	1.85	8.97	1.89	9.15	1.90	9.33	1.92	9.69	1.96	10.07	1.99
						20	8.11	1.86	8.46	1.90	8.81	1.93	8.99	1.95	9.18	1.97	9.54	2.01	9.92	2.04
						21	8.03	1.89	8.38	1.92	8.74	1.96	8.92	1.98	9.10	1.99	9.47	2.03	9.84	2.07
						23	7.88	1.93	8.23	1.97	8.59	2.01	8.77	2.02	8.95	2.04	9.32	2.08	9.69	2.12
						25	7.73	1.98	8.08	2.02	8.44	2.06	8.62	2.07	8.80	2.09	9.17	2.13	9.55	2.17
						27	7.57	2.03	7.93	2.07	8.29	2.11	8.47	2.12	8.65	2.14	9.02	2.18	9.40	2.22
						29	7.42	2.08	7.78	2.12	8.14	2.16	8.32	2.18	8.50	2.19	8.87	2.23	9.25	2.27
						31	7.27	2.14	7.63	2.17	7.99	2.21	8.17	2.23	8.36	2.25	8.73	2.28	9.10	2.32
						33	7.12	2.19	7.48	2.22	7.84	2.26	8.02	2.28	8.21	2.30	8.58	2.34	8.96	2.38
						35	6.97	2.24	7.33	2.28	7.69	2.32	7.89	2.33	8.06	2.35	8.43	2.39	8.81	2.43
						37	6.82	2.29	7.18	2.33	7.54	2.37	7.73	2.39	7.91	2.41	8.29	2.45	8.66	2.48
						39	6.68	2.35	7.03	2.39	7.40	2.43	7.58	2.44	7.77	2.46	8.14	2.50	8.52	2.54
						42	6.45	2.43	6.81	2.47	7.18	2.51	7.36	2.53	7.55	2.55	7.92	2.59	8.30	2.63
						44	6.31	2.49	6.67	2.53	7.03	2.57	7.21	2.59	7.40	2.61	7.78	2.65	8.16	2.68
						46	6.16	2.55	6.52	2.59	6.88	2.63	7.07	2.65	7.26	2.66	7.63	2.70	8.01	2.74
2000	2500	2500	5000	12000	150%	10	9.00	1.67	9.35	1.71	9.71	1.74	9.89	1.76	10.07	1.78	10.44	1.81	10.81	1.85
						12	8.84	1.71	9.19	1.75	9.55	1.79	9.73	1.80	9.92	1.82	10.29	1.86	10.66	1.89
						14	8.68	1.76	9.04	1.80	9.40	1.83	9.58	1.85	9.76	1.87	10.13	1.90	10.51	1.94
						16	8.53	1.81	8.88	1.84	9.24	1.88	9.43	1.90	9.61	1.92	9.98	1.95	10.36	1.99
						18	8.37	1.85	8.73	1.89	9.09	1.93	9.27	1.95	9.46	1.96	9.83	2.00	10.21	2.04
						20	8.22	1.90	8.57	1.94	8.94	1.98	9.12	1.99	9.30	2.01	9.68	2.05	10.05	2.09
						21	8.14	1.93	8.50	1.96	8.86	2.00	9.04	2.02	9.23	2.04	9.60	2.07	9.98	2.11
						23	7.99	1.98	8.34	2.01	8.71	2.05	8.89	2.07	9.08	2.09	9.45	2.12	9.83	2.16
						25	7.83	2.03	8.19	2.06	8.56	2.10	8.74	2.12	8.92	2.14	9.30	2.18	9.68	2.21
						27	7.68	2.08	8.04	2.11	8.40	2.15	8.59	2.17	8.77	2.19	9.15	2.23	9.53	2.26
						29	7.53	2.13	7.89	2.17	8.25	2.20	8.44	2.22	8.62	2.24	9.00	2.28	9.38	2.32
						31	7.37	2.18	7.74	2.22	8.10	2.26	8.29	2.28	8.47	2.30	8.85	2.33	9.23	2.37
						33	7.22	2.23	7.58	2.27	7.95	2.31	8.14	2.33	8.32	2.35	8.70	2.39	9.08	2.43
						35	7.07	2.29	7.43	2.33	7.80	2.37	8.00	2.38	8.17	2.40	8.55	2.44	8.93	2.48
						37	6.92	2.34	7.28	2.38	7.65	2.42	7.84	2.44	8.02	2.46	8.40	2.50	8.79	2.54
						39	6.77	2.40	7.13	2.44	7.50	2.48	7.69	2.50	7.87	2.52	8.25	2.56	8.64	2.59
						42	6.54	2.49	6.91	2.52	7.28	2.56	7.46	2.58	7.65	2.60	8.03	2.64	8.42	2.68
						44	6.39	2.54	6.76	2.58	7.13	2.62	7.32	2.64	7.50	2.66	7.88	2.70	8.27	2.74
						46	6.24	2.60	6.61	2.64	6.98	2.68	7.17	2.70	7.36	2.72	7.74	2.76	8.12	2.80

12. Capacity Table

12-4. AJ080TXJ4KH/EA

COOLING

Combination (Capacity Index)				Combination (Total)	Combination (%)	Outdoor Temperature (°C,DB)	Indoor Temperature (°C, WB)													
							14		16		18		19		20		22		24	
							TC(kW)	PI(kW)	TC(kW)	PI(kW)	TC(kW)	PI(kW)	TC(kW)	PI(kW)	TC(kW)	PI(kW)	TC(kW)	PI(kW)	TC(kW)	PI(kW)
2000	2500	3500	3500	11500	144%	10	9.00	1.67	9.35	1.71	9.71	1.74	9.89	1.76	10.07	1.78	10.44	1.81	10.81	1.85
						12	8.84	1.71	9.19	1.75	9.55	1.79	9.73	1.80	9.92	1.82	10.29	1.86	10.66	1.89
						14	8.68	1.76	9.04	1.80	9.40	1.83	9.58	1.85	9.76	1.87	10.13	1.90	10.51	1.94
						16	8.53	1.81	8.88	1.84	9.24	1.88	9.43	1.90	9.61	1.92	9.98	1.95	10.36	1.99
						18	8.37	1.85	8.73	1.89	9.09	1.93	9.27	1.95	9.46	1.96	9.83	2.00	10.21	2.04
						20	8.22	1.90	8.57	1.94	8.94	1.98	9.12	1.99	9.30	2.01	9.68	2.05	10.05	2.09
						21	8.14	1.93	8.50	1.96	8.86	2.00	9.04	2.02	9.23	2.04	9.60	2.07	9.98	2.11
						23	7.99	1.98	8.34	2.01	8.71	2.05	8.89	2.07	9.08	2.09	9.45	2.12	9.83	2.16
						25	7.83	2.03	8.19	2.06	8.56	2.10	8.74	2.12	8.92	2.14	9.30	2.18	9.68	2.21
						27	7.68	2.08	8.04	2.11	8.40	2.15	8.59	2.17	8.77	2.19	9.15	2.23	9.53	2.26
						29	7.53	2.13	7.89	2.17	8.25	2.20	8.44	2.22	8.62	2.24	9.00	2.28	9.38	2.32
						31	7.37	2.18	7.74	2.22	8.10	2.26	8.29	2.28	8.47	2.30	8.85	2.33	9.23	2.37
						33	7.22	2.23	7.58	2.27	7.95	2.31	8.14	2.33	8.32	2.35	8.70	2.39	9.08	2.43
						35	7.07	2.29	7.43	2.33	7.80	2.37	8.00	2.38	8.17	2.40	8.55	2.44	8.93	2.48
						37	6.92	2.34	7.28	2.38	7.65	2.42	7.84	2.44	8.02	2.46	8.40	2.50	8.79	2.54
						39	6.77	2.40	7.13	2.44	7.50	2.48	7.69	2.50	7.87	2.52	8.25	2.56	8.64	2.59
						42	6.54	2.49	6.91	2.52	7.28	2.56	7.46	2.58	7.65	2.60	8.03	2.64	8.42	2.68
						44	6.39	2.54	6.76	2.58	7.13	2.62	7.32	2.64	7.50	2.66	7.88	2.70	8.27	2.74
						46	6.24	2.60	6.61	2.64	6.98	2.68	7.17	2.70	7.36	2.72	7.74	2.76	8.12	2.80
2500	2500	2500	2500	10000	125%	10	8.73	1.61	9.07	1.64	9.42	1.68	9.59	1.69	9.77	1.71	10.13	1.74	10.49	1.78
						12	8.57	1.65	8.92	1.68	9.27	1.72	9.44	1.74	9.62	1.75	9.98	1.79	10.34	1.82
						14	8.42	1.69	8.77	1.73	9.12	1.76	9.29	1.78	9.47	1.80	9.83	1.83	10.19	1.87
						16	8.27	1.74	8.62	1.77	8.97	1.81	9.14	1.83	9.32	1.84	9.68	1.88	10.05	1.91
						18	8.12	1.78	8.47	1.82	8.82	1.85	8.99	1.87	9.17	1.89	9.53	1.92	9.90	1.96
						20	7.97	1.83	8.32	1.87	8.67	1.90	8.85	1.92	9.03	1.94	9.39	1.97	9.75	2.01
						21	7.90	1.85	8.24	1.89	8.59	1.92	8.77	1.94	8.95	1.96	9.31	2.00	9.68	2.03
						23	7.75	1.90	8.09	1.94	8.45	1.97	8.62	1.99	8.80	2.01	9.17	2.04	9.53	2.08
						25	7.60	1.95	7.95	1.98	8.30	2.02	8.48	2.04	8.66	2.06	9.02	2.09	9.39	2.13
						27	7.45	2.00	7.80	2.03	8.15	2.07	8.33	2.09	8.51	2.11	8.87	2.14	9.24	2.18
						29	7.30	2.05	7.65	2.08	8.00	2.12	8.18	2.14	8.36	2.16	8.73	2.19	9.10	2.23
						31	7.15	2.10	7.50	2.14	7.86	2.17	8.04	2.19	8.22	2.21	8.58	2.25	8.95	2.28
						33	7.01	2.15	7.36	2.19	7.71	2.22	7.89	2.24	8.07	2.26	8.44	2.30	8.81	2.33
						35	6.86	2.20	7.21	2.24	7.57	2.28	7.76	2.29	7.93	2.31	8.29	2.35	8.67	2.39
						37	6.71	2.26	7.06	2.29	7.42	2.33	7.60	2.35	7.78	2.37	8.15	2.40	8.52	2.44
						39	6.57	2.31	6.92	2.35	7.28	2.38	7.46	2.40	7.64	2.42	8.01	2.46	8.38	2.50
						42	6.35	2.39	6.70	2.43	7.06	2.47	7.24	2.49	7.42	2.50	7.79	2.54	8.16	2.58
						44	6.20	2.45	6.56	2.49	6.91	2.52	7.10	2.54	7.28	2.56	7.65	2.60	8.02	2.64
						46	6.06	2.50	6.41	2.54	6.77	2.58	6.95	2.60	7.14	2.62	7.51	2.66	7.88	2.70

12. Capacity Table

12-4. AJ080TXJ4KH/EA

COOLING

Combination (Capacity Index)				Combination (Total)	Combination (%)	Outdoor Temperature (°C,DB)	Indoor Temperature (°C, WB)													
							14		16		18		19		20		22		24	
							TC(kW)	PI(kW)	TC(kW)	PI(kW)	TC(kW)	PI(kW)	TC(kW)	PI(kW)	TC(kW)	PI(kW)	TC(kW)	PI(kW)	TC(kW)	PI(kW)
2500	2500	2500	3500	11000	138%	10	9.00	1.67	9.35	1.71	9.71	1.74	9.89	1.76	10.07	1.78	10.44	1.81	10.81	1.85
						12	8.84	1.71	9.19	1.75	9.55	1.79	9.73	1.80	9.92	1.82	10.29	1.86	10.66	1.89
						14	8.68	1.76	9.04	1.80	9.40	1.83	9.58	1.85	9.76	1.87	10.13	1.90	10.51	1.94
						16	8.53	1.81	8.88	1.84	9.24	1.88	9.43	1.90	9.61	1.92	9.98	1.95	10.36	1.99
						18	8.37	1.85	8.73	1.89	9.09	1.93	9.27	1.95	9.46	1.96	9.83	2.00	10.21	2.04
						20	8.22	1.90	8.57	1.94	8.94	1.98	9.12	1.99	9.30	2.01	9.68	2.05	10.05	2.09
						21	8.14	1.93	8.50	1.96	8.86	2.00	9.04	2.02	9.23	2.04	9.60	2.07	9.98	2.11
						23	7.99	1.98	8.34	2.01	8.71	2.05	8.89	2.07	9.08	2.09	9.45	2.12	9.83	2.16
						25	7.83	2.03	8.19	2.06	8.56	2.10	8.74	2.12	8.92	2.14	9.30	2.18	9.68	2.21
						27	7.68	2.08	8.04	2.11	8.40	2.15	8.59	2.17	8.77	2.19	9.15	2.23	9.53	2.26
						29	7.53	2.13	7.89	2.17	8.25	2.20	8.44	2.22	8.62	2.24	9.00	2.28	9.38	2.32
						31	7.37	2.18	7.74	2.22	8.10	2.26	8.29	2.28	8.47	2.30	8.85	2.33	9.23	2.37
						33	7.22	2.23	7.58	2.27	7.95	2.31	8.14	2.33	8.32	2.35	8.70	2.39	9.08	2.43
						35	7.07	2.29	7.43	2.33	7.80	2.37	8.00	2.38	8.17	2.40	8.55	2.44	8.93	2.48
						37	6.92	2.34	7.28	2.38	7.65	2.42	7.84	2.44	8.02	2.46	8.40	2.50	8.79	2.54
						39	6.77	2.40	7.13	2.44	7.50	2.48	7.69	2.50	7.87	2.52	8.25	2.56	8.64	2.59
						42	6.54	2.49	6.91	2.52	7.28	2.56	7.46	2.58	7.65	2.60	8.03	2.64	8.42	2.68
						44	6.39	2.54	6.76	2.58	7.13	2.62	7.32	2.64	7.50	2.66	7.88	2.70	8.27	2.74
						46	6.24	2.60	6.61	2.64	6.98	2.68	7.17	2.70	7.36	2.72	7.74	2.76	8.12	2.80
2500	2500	3500	3500	12000	150%	10	9.00	1.67	9.35	1.71	9.71	1.74	9.89	1.76	10.07	1.78	10.44	1.81	10.81	1.85
						12	8.84	1.71	9.19	1.75	9.55	1.79	9.73	1.80	9.92	1.82	10.29	1.86	10.66	1.89
						14	8.68	1.76	9.04	1.80	9.40	1.83	9.58	1.85	9.76	1.87	10.13	1.90	10.51	1.94
						16	8.53	1.81	8.88	1.84	9.24	1.88	9.43	1.90	9.61	1.92	9.98	1.95	10.36	1.99
						18	8.37	1.85	8.73	1.89	9.09	1.93	9.27	1.95	9.46	1.96	9.83	2.00	10.21	2.04
						20	8.22	1.90	8.57	1.94	8.94	1.98	9.12	1.99	9.30	2.01	9.68	2.05	10.05	2.09
						21	8.14	1.93	8.50	1.96	8.86	2.00	9.04	2.02	9.23	2.04	9.60	2.07	9.98	2.11
						23	7.99	1.98	8.34	2.01	8.71	2.05	8.89	2.07	9.08	2.09	9.45	2.12	9.83	2.16
						25	7.83	2.03	8.19	2.06	8.56	2.10	8.74	2.12	8.92	2.14	9.30	2.18	9.68	2.21
						27	7.68	2.08	8.04	2.11	8.40	2.15	8.59	2.17	8.77	2.19	9.15	2.23	9.53	2.26
						29	7.53	2.13	7.89	2.17	8.25	2.20	8.44	2.22	8.62	2.24	9.00	2.28	9.38	2.32
						31	7.37	2.18	7.74	2.22	8.10	2.26	8.29	2.28	8.47	2.30	8.85	2.33	9.23	2.37
						33	7.22	2.23	7.58	2.27	7.95	2.31	8.14	2.33	8.32	2.35	8.70	2.39	9.08	2.43
						35	7.07	2.29	7.43	2.33	7.80	2.37	8.00	2.38	8.17	2.40	8.55	2.44	8.93	2.48
						37	6.92	2.34	7.28	2.38	7.65	2.42	7.84	2.44	8.02	2.46	8.40	2.50	8.79	2.54
						39	6.77	2.40	7.13	2.44	7.50	2.48	7.69	2.50	7.87	2.52	8.25	2.56	8.64	2.59
						42	6.54	2.49	6.91	2.52	7.28	2.56	7.46	2.58	7.65	2.60	8.03	2.64	8.42	2.68
						44	6.39	2.54	6.76	2.58	7.13	2.62	7.32	2.64	7.50	2.66	7.88	2.70	8.27	2.74
						46	6.24	2.60	6.61	2.64	6.98	2.68	7.17	2.70	7.36	2.72	7.74	2.76	8.12	2.80

NOTE

1 Cooling capacity is based on 27°CDB / 19°CWB (indoor temperature), 35°CDB (outdoor temperature).

2 Heating capacity is based on 20°CDB (indoor temperature), 7°CDB/6°CWB (outdoor temperature).

3 The above is the value for connecting with the following indoor units.
- AJ***TNAPKH : Premium Wind Free

4 Capacities are based on the following conditions:
- Corresponding refrigerant piping length : 5m / - Level difference : 0m

5 The total ability of connected a indoor unit is up to 8.5kW

6 It is impossible to connect the indoor unit for one room only.

7 This data is reference data for temperature capacity trend.

12. Capacity Table

12-4. AJ080TXJ4KH/EA

HEATING

Combination (Capacity Index)				Combination (Total)	Combination (%)	Outdoor Temperature (°C,DB)	Indoor Temperature (°C, DB)													
							14		16		18		20		21		22		24	
							TC(kW)	PI(kW)	TC(kW)	PI(kW)	TC(kW)	PI(kW)	TC(kW)	PI(kW)	TC(kW)	PI(kW)	TC(kW)	PI(kW)	TC(kW)	PI(kW)
2000				2000	25%	-15	1.26	0.97	1.22	0.98	1.18	1.00	1.17	1.00	1.15	1.01	1.13	1.02	1.11	1.03
						-10	1.51	1.02	1.47	1.04	1.43	1.05	1.41	1.06	1.40	1.06	1.37	1.07	1.34	1.08
						-5	1.76	1.07	1.71	1.09	1.67	1.10	1.66	1.11	1.64	1.11	1.61	1.13	1.58	1.14
						0	2.01	1.12	1.96	1.14	1.92	1.15	1.90	1.16	1.88	1.17	1.85	1.18	1.82	1.19
						2	2.11	1.14	2.06	1.16	2.02	1.17	2.00	1.18	1.98	1.19	1.95	1.20	1.92	1.21
						7	2.31	1.18	2.26	1.20	2.21	1.21	2.20	1.22	2.17	1.23	2.14	1.24	2.11	1.25
						10	2.51	1.22	2.46	1.24	2.41	1.25	2.39	1.26	2.37	1.27	2.33	1.28	2.30	1.30
						15	2.76	1.27	2.71	1.29	2.66	1.31	2.64	1.31	2.61	1.32	2.57	1.34	2.54	1.35
2500				2500	31%	-15	1.83	1.08	1.77	1.10	1.72	1.11	1.70	1.12	1.68	1.12	1.64	1.13	1.61	1.14
						-10	2.19	1.14	2.13	1.15	2.08	1.17	2.05	1.18	2.03	1.18	1.99	1.20	1.95	1.21
						-5	2.56	1.19	2.49	1.21	2.44	1.23	2.41	1.24	2.38	1.24	2.34	1.25	2.30	1.27
						0	2.92	1.25	2.85	1.27	2.79	1.29	2.76	1.29	2.74	1.30	2.69	1.31	2.65	1.33
						2	3.07	1.27	3.00	1.29	2.94	1.31	2.91	1.32	2.88	1.32	2.83	1.34	2.79	1.35
						7	3.36	1.32	3.29	1.34	3.22	1.35	3.20	1.36	3.16	1.37	3.11	1.38	3.07	1.40
						10	3.65	1.36	3.58	1.38	3.51	1.40	3.48	1.41	3.45	1.42	3.39	1.43	3.34	1.44
						15	4.02	1.41	3.94	1.44	3.87	1.46	3.83	1.46	3.80	1.47	3.74	1.49	3.69	1.50
3500				3500	44%	-15	2.29	1.25	2.22	1.27	2.15	1.28	2.13	1.29	2.10	1.30	2.05	1.31	2.01	1.32
						-10	2.74	1.31	2.67	1.33	2.60	1.35	2.57	1.36	2.54	1.37	2.49	1.38	2.44	1.39
						-5	3.20	1.38	3.12	1.40	3.04	1.42	3.01	1.43	2.98	1.43	2.92	1.45	2.88	1.46
						0	3.65	1.44	3.57	1.46	3.49	1.48	3.46	1.49	3.42	1.50	3.36	1.52	3.31	1.53
						2	3.83	1.47	3.75	1.49	3.67	1.51	3.63	1.52	3.60	1.53	3.54	1.54	3.48	1.56
						7	4.20	1.52	4.11	1.54	4.03	1.56	4.00	1.57	3.95	1.58	3.89	1.60	3.83	1.61
						10	4.56	1.57	4.47	1.59	4.38	1.61	4.35	1.62	4.31	1.63	4.24	1.65	4.18	1.67
						15	5.02	1.63	4.92	1.66	4.83	1.68	4.79	1.69	4.75	1.70	4.68	1.72	4.62	1.74
5000				5000	63%	-15	3.43	1.80	3.33	1.83	3.23	1.86	3.19	1.87	3.15	1.88	3.08	1.89	3.02	1.91
						-10	4.11	1.90	4.00	1.93	3.90	1.95	3.85	1.96	3.81	1.98	3.73	1.99	3.67	2.01
						-5	4.80	1.99	4.67	2.02	4.57	2.05	4.52	2.06	4.47	2.07	4.39	2.09	4.31	2.11
						0	5.48	2.09	5.35	2.12	5.24	2.15	5.18	2.16	5.13	2.17	5.04	2.19	4.97	2.21
						2	5.75	2.12	5.62	2.15	5.50	2.18	5.45	2.20	5.40	2.21	5.31	2.23	5.23	2.25
						7	6.30	2.20	6.16	2.23	6.04	2.26	6.00	2.27	5.93	2.29	5.83	2.31	5.75	2.33
						10	6.84	2.27	6.70	2.30	6.58	2.33	6.52	2.35	6.46	2.36	6.36	2.39	6.27	2.41
						15	7.53	2.36	7.38	2.40	7.25	2.43	7.19	2.44	7.13	2.46	7.02	2.49	6.92	2.51
6800				6800	85%	-15	4.58	2.19	4.44	2.23	4.31	2.26	4.25	2.27	4.20	2.28	4.10	2.30	4.02	2.32
						-10	5.49	2.31	5.33	2.34	5.20	2.37	5.14	2.39	5.08	2.40	4.97	2.43	4.89	2.45
						-5	6.39	2.42	6.23	2.46	6.09	2.49	6.02	2.51	5.96	2.52	5.85	2.55	5.75	2.57
						0	7.30	2.54	7.13	2.57	6.98	2.61	6.91	2.62	6.84	2.64	6.72	2.67	6.62	2.69
						2	7.67	2.58	7.49	2.62	7.34	2.65	7.27	2.67	7.20	2.69	7.07	2.71	6.97	2.74
						7	8.40	2.67	8.22	2.71	8.05	2.75	8.00	2.76	7.91	2.78	7.78	2.81	7.66	2.84
						10	9.12	2.76	8.94	2.80	8.77	2.84	8.69	2.86	8.62	2.87	8.48	2.90	8.36	2.93
						15	10.04	2.87	9.84	2.91	9.67	2.95	9.58	2.97	9.51	2.99	9.36	3.02	9.23	3.05
2000	2000			4000	50%	-15	2.52	0.97	2.44	0.98	2.37	1.00	2.34	1.00	2.31	1.01	2.26	1.02	2.21	1.03
						-10	3.02	1.02	2.93	1.04	2.86	1.05	2.82	1.06	2.79	1.06	2.74	1.07	2.69	1.08
						-5	3.52	1.07	3.43	1.09	3.35	1.10	3.31	1.11	3.28	1.11	3.22	1.13	3.16	1.14
						0	4.02	1.12	3.92	1.14	3.84	1.15	3.80	1.16	3.76	1.17	3.70	1.18	3.64	1.19
						2	4.22	1.14	4.12	1.16	4.04	1.17	4.00	1.18	3.96	1.19	3.89	1.20	3.83	1.21
						7	4.62	1.18	4.52	1.20	4.43	1.21	4.40	1.22	4.35	1.23	4.28	1.24	4.21	1.25
						10	5.02	1.22	4.92	1.24	4.82	1.25	4.78	1.26	4.74	1.27	4.66	1.28	4.60	1.30
						15	5.52	1.27	5.41	1.29	5.32	1.31	5.27	1.31	5.23	1.32	5.15	1.34	5.08	1.35
2000	2500			4500	56%	-15	2.92	1.12	2.83	1.14	2.75	1.15	2.71	1.16	2.68	1.17	2.62	1.18	2.56	1.19
						-10	3.50	1.18	3.40	1.20	3.31	1.21	3.27	1.22	3.24	1.23	3.17	1.24	3.12	1.25
						-5	4.08	1.24	3.97	1.26	3.88	1.27	3.84	1.28	3.80	1.29	3.73	1.30	3.67	1.31
						0	4.66	1.30	4.55	1.31	4.45	1.33	4.41	1.34	4.36	1.35	4.29	1.36	4.22	1.37
						2	4.89	1.32	4.78	1.34	4.68	1.36	4.63	1.36	4.59	1.37	4.51	1.39	4.44	1.40
						7	5.35	1.36	5.24	1.38	5.13	1.40	5.10	1.41	5.04	1.42	4.96	1.44	4.89	1.45
						10	5.82	1.41	5.70	1.43	5.59	1.45	5.54	1.46	5.49	1.47	5.41	1.48	5.33	1.50
						15	6.40	1.47	6.28	1.49	6.16	1.51	6.11	1.52	6.06	1.53	5.97	1.54	5.88	1.56

12. Capacity Table

12-4. AJ080TXJ4KH/EA

HEATING

Combination (Capacity Index)				Combination (Total)	Combination (%)	Outdoor Temperature (°C,DB)	Indoor Temperature (°C, DB)													
							14		16		18		20		21		22		24	
							TC(kW)	PI(kW)	TC(kW)	PI(kW)	TC(kW)	PI(kW)	TC(kW)	PI(kW)	TC(kW)	PI(kW)	TC(kW)	PI(kW)	TC(kW)	PI(kW)
2000	3500			5500	69%	-15	3.43	1.40	3.33	1.42	3.23	1.44	3.19	1.45	3.15	1.45	3.08	1.47	3.02	1.48
						-10	4.11	1.47	4.00	1.49	3.90	1.51	3.85	1.52	3.81	1.53	3.73	1.55	3.67	1.56
						-5	4.80	1.55	4.67	1.57	4.57	1.59	4.52	1.60	4.47	1.61	4.39	1.62	4.31	1.64
						0	5.48	1.62	5.35	1.64	5.24	1.66	5.18	1.67	5.13	1.68	5.04	1.70	4.97	1.72
						2	5.75	1.65	5.62	1.67	5.50	1.69	5.45	1.70	5.40	1.71	5.31	1.73	5.23	1.75
						7	6.30	1.70	6.16	1.73	6.04	1.75	6.00	1.76	5.93	1.77	5.83	1.79	5.75	1.81
						10	6.84	1.76	6.70	1.79	6.58	1.81	6.52	1.82	6.46	1.83	6.36	1.85	6.27	1.87
						15	7.53	1.83	7.38	1.86	7.25	1.88	7.19	1.89	7.13	1.91	7.02	1.93	6.92	1.95
2000	5000			7000	88%	-15	4.47	1.72	4.33	1.74	4.20	1.77	4.14	1.78	4.09	1.79	4.00	1.80	3.92	1.82
						-10	5.35	1.81	5.20	1.83	5.07	1.86	5.01	1.87	4.95	1.88	4.85	1.90	4.77	1.91
						-5	6.23	1.90	6.08	1.92	5.94	1.95	5.87	1.96	5.81	1.97	5.70	1.99	5.61	2.01
						0	7.12	1.98	6.96	2.01	6.81	2.04	6.74	2.05	6.67	2.07	6.56	2.09	6.45	2.11
						2	7.47	2.02	7.31	2.05	7.15	2.08	7.08	2.09	7.02	2.10	6.90	2.12	6.79	2.14
						7	8.19	2.09	8.01	2.12	7.85	2.15	7.80	2.16	7.71	2.18	7.58	2.20	7.47	2.22
						10	8.90	2.16	8.72	2.19	8.55	2.22	8.47	2.24	8.40	2.25	8.27	2.27	8.15	2.29
						15	9.79	2.25	9.60	2.28	9.43	2.31	9.34	2.33	9.27	2.34	9.13	2.36	9.00	2.39
2000	6800			8800	110%	-15	4.65	1.79	4.50	1.82	4.37	1.84	4.31	1.85	4.26	1.86	4.16	1.88	4.08	1.89
						-10	5.57	1.88	5.41	1.91	5.28	1.94	5.21	1.95	5.15	1.96	5.05	1.98	4.96	1.99
						-5	6.49	1.98	6.33	2.00	6.18	2.03	6.11	2.04	6.05	2.05	5.94	2.08	5.84	2.09
						0	7.41	2.07	7.24	2.10	7.09	2.13	7.01	2.14	6.95	2.15	6.83	2.17	6.72	2.19
						2	7.78	2.10	7.61	2.14	7.45	2.16	7.38	2.18	7.31	2.19	7.18	2.21	7.07	2.23
						7	8.52	2.18	8.34	2.21	8.17	2.24	8.12	2.25	8.03	2.27	7.89	2.29	7.78	2.31
						10	9.26	2.25	9.07	2.28	8.90	2.31	8.82	2.33	8.75	2.34	8.61	2.37	8.48	2.39
						15	10.19	2.34	9.99	2.38	9.81	2.41	9.73	2.42	9.65	2.44	9.50	2.46	9.37	2.49
2500	2500			5000	63%	-15	3.32	1.27	3.22	1.29	3.12	1.31	3.08	1.32	3.04	1.32	2.97	1.34	2.92	1.35
						-10	3.98	1.34	3.87	1.36	3.77	1.38	3.72	1.38	3.68	1.39	3.61	1.41	3.54	1.42
						-5	4.64	1.40	4.52	1.43	4.41	1.44	4.37	1.45	4.32	1.46	4.24	1.48	4.17	1.49
						0	5.29	1.47	5.17	1.49	5.06	1.51	5.01	1.52	4.96	1.53	4.88	1.55	4.80	1.56
						2	5.56	1.50	5.43	1.52	5.32	1.54	5.27	1.55	5.22	1.56	5.13	1.57	5.05	1.59
						7	6.09	1.55	5.96	1.57	5.84	1.59	5.80	1.60	5.73	1.61	5.64	1.63	5.56	1.64
						10	6.62	1.60	6.48	1.62	6.36	1.65	6.30	1.66	6.25	1.67	6.15	1.68	6.06	1.70
						15	7.28	1.66	7.14	1.69	7.01	1.71	6.95	1.72	6.89	1.73	6.79	1.75	6.69	1.77
2500	3500			6000	75%	-15	3.84	1.54	3.72	1.57	3.61	1.59	3.56	1.59	3.52	1.60	3.44	1.62	3.37	1.63
						-10	4.59	1.62	4.47	1.65	4.35	1.67	4.30	1.68	4.25	1.69	4.17	1.70	4.09	1.72
						-5	5.35	1.70	5.22	1.73	5.10	1.75	5.04	1.76	4.99	1.77	4.90	1.79	4.82	1.81
						0	6.12	1.78	5.97	1.81	5.85	1.83	5.79	1.84	5.73	1.86	5.63	1.87	5.54	1.89
						2	6.42	1.81	6.28	1.84	6.15	1.87	6.09	1.88	6.03	1.89	5.93	1.91	5.84	1.93
						7	7.03	1.88	6.88	1.91	6.74	1.93	6.70	1.94	6.62	1.95	6.51	1.97	6.42	1.99
						10	7.64	1.94	7.49	1.97	7.34	2.00	7.28	2.01	7.22	2.02	7.10	2.04	7.00	2.06
						15	8.41	2.02	8.24	2.05	8.10	2.08	8.03	2.09	7.96	2.10	7.84	2.12	7.73	2.14
2500	5000			7500	94%	-15	4.47	1.72	4.33	1.74	4.20	1.77	4.14	1.78	4.09	1.79	4.00	1.80	3.92	1.82
						-10	5.35	1.81	5.20	1.83	5.07	1.86	5.01	1.87	4.95	1.88	4.85	1.90	4.77	1.91
						-5	6.23	1.90	6.08	1.92	5.94	1.95	5.87	1.96	5.81	1.97	5.70	1.99	5.61	2.01
						0	7.12	1.98	6.96	2.01	6.81	2.04	6.74	2.05	6.67	2.07	6.56	2.09	6.45	2.11
						2	7.47	2.02	7.31	2.05	7.15	2.08	7.08	2.09	7.02	2.10	6.90	2.12	6.79	2.14
						7	8.19	2.09	8.01	2.12	7.85	2.15	7.80	2.16	7.71	2.18	7.58	2.20	7.47	2.22
						10	8.90	2.16	8.72	2.19	8.55	2.22	8.47	2.24	8.40	2.25	8.27	2.27	8.15	2.29
						15	9.79	2.25	9.60	2.28	9.43	2.31	9.34	2.33	9.27	2.34	9.13	2.36	9.00	2.39

12. Capacity Table

12-4. AJ080TXJ4KH/EA

HEATING

Combination (Capacity Index)				Combination (Total)	Combination (%)	Outdoor Temperature (°C,DB)	Indoor Temperature (°C, DB)													
							14		16		18		20		21		22		24	
							TC(kW)	PI(kW)	TC(kW)	PI(kW)	TC(kW)	PI(kW)	TC(kW)	PI(kW)	TC(kW)	PI(kW)	TC(kW)	PI(kW)	TC(kW)	PI(kW)
2500	6800			9300	116%	-15	4.78	1.86	4.63	1.89	4.50	1.91	4.44	1.92	4.38	1.93	4.28	1.95	4.20	1.97
						-10	5.73	1.96	5.57	1.99	5.43	2.01	5.36	2.02	5.30	2.04	5.19	2.06	5.10	2.07
						-5	6.67	2.05	6.51	2.08	6.35	2.11	6.29	2.13	6.22	2.14	6.10	2.16	6.00	2.18
						0	7.62	2.15	7.45	2.18	7.29	2.21	7.21	2.22	7.14	2.24	7.02	2.26	6.91	2.28
						2	8.00	2.19	7.82	2.22	7.66	2.25	7.58	2.26	7.51	2.28	7.38	2.30	7.27	2.32
						7	8.76	2.26	8.58	2.30	8.41	2.33	8.35	2.34	8.25	2.36	8.12	2.38	8.00	2.40
						10	9.52	2.34	9.33	2.37	9.15	2.41	9.07	2.42	8.99	2.44	8.85	2.46	8.73	2.49
						15	10.48	2.43	10.28	2.47	10.09	2.50	10.00	2.52	9.92	2.53	9.77	2.56	9.63	2.59
3500	3500			7000	88%	-15	4.35	1.73	4.21	1.76	4.09	1.78	4.04	1.79	3.99	1.80	3.90	1.82	3.82	1.83
						-10	5.21	1.82	5.07	1.85	4.94	1.88	4.88	1.89	4.82	1.90	4.73	1.92	4.64	1.93
						-5	6.07	1.91	5.92	1.94	5.78	1.97	5.72	1.98	5.66	1.99	5.56	2.01	5.47	2.03
						0	6.94	2.00	6.78	2.03	6.63	2.06	6.57	2.07	6.50	2.08	6.39	2.11	6.29	2.12
						2	7.28	2.04	7.12	2.07	6.97	2.10	6.90	2.11	6.84	2.12	6.72	2.14	6.62	2.16
						7	7.98	2.11	7.81	2.14	7.65	2.17	7.60	2.18	7.51	2.20	7.39	2.22	7.28	2.24
						10	8.67	2.18	8.49	2.21	8.33	2.24	8.26	2.26	8.19	2.27	8.06	2.29	7.94	2.32
						15	9.54	2.27	9.35	2.30	9.18	2.33	9.10	2.35	9.03	2.36	8.89	2.39	8.77	2.41
3500	5000			8500	106%	-15	4.65	1.79	4.50	1.82	4.37	1.84	4.31	1.85	4.26	1.86	4.16	1.88	4.08	1.89
						-10	5.57	1.88	5.41	1.91	5.28	1.94	5.21	1.95	5.15	1.96	5.05	1.98	4.96	1.99
						-5	6.49	1.98	6.33	2.00	6.18	2.03	6.11	2.04	6.05	2.05	5.94	2.08	5.84	2.09
						0	7.41	2.07	7.24	2.10	7.09	2.13	7.01	2.14	6.95	2.15	6.83	2.17	6.72	2.19
						2	7.78	2.10	7.61	2.14	7.45	2.16	7.38	2.18	7.31	2.19	7.18	2.21	7.07	2.23
						7	8.52	2.18	8.34	2.21	8.17	2.24	8.12	2.25	8.03	2.27	7.89	2.29	7.78	2.31
						10	9.26	2.25	9.07	2.28	8.90	2.31	8.82	2.33	8.75	2.34	8.61	2.37	8.48	2.39
						15	10.19	2.34	9.99	2.38	9.81	2.41	9.73	2.42	9.65	2.44	9.50	2.46	9.37	2.49
3500	6800			10300	129%	-15	4.84	1.89	4.69	1.92	4.55	1.95	4.49	1.96	4.43	1.97	4.33	1.99	4.25	2.00
						-10	5.79	1.99	5.63	2.02	5.49	2.05	5.42	2.06	5.36	2.07	5.25	2.09	5.16	2.11
						-5	6.75	2.09	6.58	2.12	6.43	2.15	6.36	2.16	6.30	2.17	6.18	2.20	6.08	2.21
						0	7.71	2.19	7.53	2.22	7.37	2.25	7.30	2.26	7.23	2.28	7.10	2.30	6.99	2.32
						2	8.10	2.23	7.92	2.26	7.75	2.29	7.68	2.30	7.60	2.32	7.47	2.34	7.36	2.36
						7	8.87	2.30	8.68	2.34	8.51	2.37	8.45	2.38	8.35	2.40	8.21	2.42	8.09	2.45
						10	9.64	2.38	9.44	2.42	9.26	2.45	9.18	2.46	9.10	2.48	8.96	2.50	8.83	2.53
						15	10.60	2.48	10.40	2.51	10.21	2.55	10.12	2.56	10.04	2.58	9.89	2.61	9.75	2.63
5000	5000			10000	125%	-15	4.87	1.86	4.71	1.89	4.58	1.91	4.52	1.92	4.46	1.93	4.36	1.95	4.27	1.97
						-10	5.83	1.96	5.67	1.99	5.52	2.01	5.46	2.02	5.40	2.04	5.29	2.06	5.19	2.07
						-5	6.79	2.05	6.62	2.08	6.47	2.11	6.40	2.13	6.33	2.14	6.21	2.16	6.11	2.18
						0	7.76	2.15	7.58	2.18	7.42	2.21	7.34	2.22	7.27	2.24	7.14	2.26	7.03	2.28
						2	8.15	2.19	7.96	2.22	7.80	2.25	7.72	2.26	7.65	2.28	7.52	2.30	7.40	2.32
						7	8.92	2.26	8.73	2.30	8.56	2.33	8.50	2.34	8.40	2.36	8.26	2.38	8.14	2.40
						10	9.70	2.34	9.50	2.37	9.32	2.41	9.23	2.42	9.16	2.44	9.01	2.46	8.88	2.49
						15	10.67	2.43	10.46	2.47	10.27	2.50	10.18	2.52	10.10	2.53	9.95	2.56	9.81	2.59
5000	6800			11800	148%	-15	4.95	1.92	4.80	1.95	4.66	1.98	4.60	1.99	4.54	2.00	4.44	2.02	4.35	2.04
						-10	5.93	2.02	5.77	2.05	5.62	2.08	5.55	2.09	5.49	2.11	5.38	2.13	5.28	2.14
						-5	6.91	2.12	6.74	2.16	6.58	2.18	6.51	2.20	6.44	2.21	6.32	2.23	6.22	2.25
						0	7.90	2.22	7.71	2.26	7.55	2.29	7.47	2.30	7.40	2.31	7.27	2.34	7.16	2.36
						2	8.29	2.26	8.10	2.30	7.93	2.33	7.86	2.34	7.78	2.36	7.65	2.38	7.53	2.40
						7	9.08	2.34	8.88	2.38	8.71	2.41	8.65	2.42	8.55	2.44	8.41	2.46	8.29	2.49
						10	9.87	2.42	9.67	2.46	9.48	2.49	9.40	2.50	9.32	2.52	9.17	2.55	9.04	2.57
						15	10.85	2.52	10.64	2.55	10.45	2.59	10.36	2.61	10.28	2.62	10.12	2.65	9.98	2.68

12. Capacity Table

12-4. AJ080TXJ4KH/EA

HEATING

Combination (Capacity Index)				Combination (Total)	Combination (%)	Outdoor Temperature (°C,DB)	Indoor Temperature (°C, DB)													
							14		16		18		20		21		22		24	
							TC(kW)	PI(kW)	TC(kW)	PI(kW)	TC(kW)	PI(kW)	TC(kW)	PI(kW)	TC(kW)	PI(kW)	TC(kW)	PI(kW)	TC(kW)	PI(kW)
2000	2000	2000		6000	75%	-15	3.78	1.45	3.66	1.48	3.55	1.50	3.51	1.50	3.46	1.51	3.38	1.53	3.32	1.54
						-10	4.53	1.53	4.40	1.55	4.29	1.57	4.24	1.58	4.19	1.59	4.10	1.61	4.03	1.62
						-5	5.27	1.61	5.14	1.63	5.02	1.65	4.97	1.66	4.92	1.67	4.83	1.69	4.75	1.70
						0	6.02	1.68	5.89	1.71	5.76	1.73	5.70	1.74	5.65	1.75	5.55	1.77	5.46	1.78
						2	6.32	1.71	6.18	1.74	6.05	1.76	5.99	1.77	5.94	1.78	5.84	1.80	5.75	1.82
						7	6.93	1.77	6.78	1.80	6.64	1.82	6.60	1.83	6.52	1.84	6.42	1.86	6.32	1.88
						10	7.53	1.83	7.37	1.86	7.24	1.88	7.17	1.89	7.11	1.91	7.00	1.93	6.90	1.94
						15	8.28	1.90	8.12	1.93	7.98	1.96	7.91	1.97	7.84	1.98	7.72	2.00	7.62	2.02
2000	2000	2500		6500	81%	-15	4.18	1.55	4.05	1.57	3.93	1.59	3.88	1.60	3.83	1.61	3.74	1.63	3.67	1.64
						-10	5.01	1.63	4.87	1.66	4.74	1.68	4.69	1.69	4.63	1.70	4.54	1.71	4.46	1.73
						-5	5.83	1.71	5.69	1.74	5.56	1.76	5.50	1.77	5.44	1.78	5.34	1.80	5.25	1.81
						0	6.66	1.79	6.51	1.82	6.37	1.84	6.31	1.85	6.25	1.86	6.14	1.88	6.04	1.90
						2	7.00	1.82	6.84	1.85	6.70	1.88	6.63	1.89	6.57	1.90	6.46	1.92	6.36	1.94
						7	7.66	1.89	7.50	1.92	7.35	1.94	7.30	1.95	7.22	1.96	7.10	1.99	6.99	2.00
						10	8.33	1.95	8.16	1.98	8.00	2.01	7.93	2.02	7.86	2.03	7.74	2.05	7.63	2.07
						15	9.16	2.03	8.98	2.06	8.82	2.09	8.75	2.10	8.67	2.11	8.54	2.14	8.42	2.16
2000	2000	3500		7500	94%	-15	4.69	1.71	4.55	1.73	4.42	1.76	4.36	1.77	4.30	1.78	4.20	1.79	4.12	1.81
						-10	5.62	1.80	5.47	1.83	5.33	1.85	5.26	1.86	5.21	1.87	5.10	1.89	5.01	1.91
						-5	6.55	1.89	6.39	1.92	6.24	1.94	6.17	1.95	6.11	1.96	5.99	1.98	5.90	2.00
						0	7.48	1.98	7.31	2.01	7.16	2.03	7.08	2.04	7.02	2.06	6.89	2.08	6.79	2.10
						2	7.86	2.01	7.68	2.04	7.52	2.07	7.45	2.08	7.38	2.09	7.25	2.11	7.14	2.13
						7	8.61	2.08	8.42	2.11	8.25	2.14	8.20	2.15	8.10	2.17	7.97	2.19	7.85	2.21
						10	9.35	2.15	9.16	2.18	8.99	2.21	8.91	2.23	8.83	2.24	8.69	2.26	8.57	2.28
						15	10.29	2.24	10.09	2.27	9.91	2.30	9.82	2.31	9.74	2.33	9.59	2.35	9.46	2.38
2000	2000	5000		9000	113%	-15	4.93	1.70	4.78	1.73	4.64	1.75	4.58	1.76	4.52	1.77	4.42	1.79	4.34	1.80
						-10	5.91	1.79	5.75	1.82	5.60	1.84	5.53	1.85	5.47	1.86	5.36	1.88	5.27	1.90
						-5	6.89	1.88	6.72	1.91	6.56	1.93	6.49	1.94	6.42	1.95	6.30	1.97	6.20	1.99
						0	7.87	1.97	7.69	2.00	7.52	2.02	7.45	2.03	7.37	2.05	7.25	2.07	7.13	2.09
						2	8.26	2.00	8.07	2.03	7.91	2.06	7.83	2.07	7.76	2.08	7.62	2.10	7.51	2.12
						7	9.05	2.07	8.85	2.10	8.68	2.13	8.62	2.14	8.52	2.16	8.38	2.18	8.26	2.20
						10	9.83	2.14	9.63	2.17	9.45	2.20	9.36	2.21	9.28	2.23	9.14	2.25	9.01	2.27
						15	10.82	2.23	10.61	2.26	10.42	2.29	10.33	2.30	10.24	2.32	10.09	2.34	9.95	2.37
2000	2000	6800		10800	135%	-15	5.01	1.71	4.85	1.73	4.71	1.76	4.65	1.77	4.59	1.78	4.49	1.79	4.40	1.81
						-10	6.00	1.80	5.83	1.83	5.69	1.85	5.62	1.86	5.55	1.87	5.44	1.89	5.35	1.91
						-5	6.99	1.89	6.82	1.92	6.66	1.94	6.59	1.95	6.52	1.96	6.40	1.98	6.29	2.00
						0	7.99	1.98	7.80	2.01	7.64	2.03	7.56	2.04	7.49	2.06	7.35	2.08	7.24	2.10
						2	8.39	2.01	8.20	2.04	8.03	2.07	7.95	2.08	7.87	2.09	7.74	2.11	7.62	2.13
						7	9.18	2.08	8.99	2.11	8.81	2.14	8.75	2.15	8.65	2.17	8.51	2.19	8.38	2.21
						10	9.98	2.15	9.78	2.18	9.59	2.21	9.51	2.23	9.42	2.24	9.27	2.26	9.14	2.28
						15	10.98	2.24	10.77	2.27	10.57	2.30	10.48	2.31	10.40	2.33	10.24	2.35	10.10	2.38
2000	2500	2500		7000	88%	-15	4.58	1.65	4.44	1.68	4.31	1.70	4.25	1.71	4.20	1.72	4.10	1.74	4.02	1.75
						-10	5.49	1.74	5.33	1.77	5.20	1.79	5.14	1.80	5.08	1.81	4.97	1.83	4.89	1.84
						-5	6.39	1.83	6.23	1.85	6.09	1.88	6.02	1.89	5.96	1.90	5.85	1.92	5.75	1.94
						0	7.30	1.91	7.13	1.94	6.98	1.97	6.91	1.98	6.84	1.99	6.72	2.01	6.62	2.03
						2	7.67	1.95	7.49	1.97	7.34	2.00	7.27	2.01	7.20	2.02	7.07	2.05	6.97	2.06
						7	8.40	2.01	8.22	2.04	8.05	2.07	8.00	2.08	7.91	2.10	7.78	2.12	7.66	2.14
						10	9.12	2.08	8.94	2.11	8.77	2.14	8.69	2.15	8.62	2.17	8.48	2.19	8.36	2.21
						15	10.04	2.16	9.84	2.20	9.67	2.23	9.58	2.24	9.51	2.25	9.36	2.28	9.23	2.30

12. Capacity Table

12-4. AJ080TXJ4KH/EA

HEATING

Combination (Capacity Index)				Combination (Total)	Combination (%)	Outdoor Temperature (°C,DB)	Indoor Temperature (°C, DB)													
							14		16		18		20		21		22		24	
							TC(kW)	PI(kW)	TC(kW)	PI(kW)	TC(kW)	PI(kW)	TC(kW)	PI(kW)	TC(kW)	PI(kW)	TC(kW)	PI(kW)	TC(kW)	PI(kW)
2000	2500	3500		8000	100%	-15	4.88	1.67	4.73	1.69	4.59	1.72	4.53	1.73	4.48	1.74	4.37	1.75	4.29	1.77
						-10	5.85	1.76	5.69	1.78	5.54	1.81	5.48	1.82	5.41	1.83	5.30	1.85	5.21	1.86
						-5	6.82	1.84	6.65	1.87	6.49	1.90	6.42	1.91	6.36	1.92	6.24	1.94	6.13	1.95
						0	7.79	1.93	7.61	1.96	7.44	1.98	7.37	2.00	7.30	2.01	7.17	2.03	7.06	2.05
						2	8.17	1.96	7.99	1.99	7.82	2.02	7.75	2.03	7.68	2.04	7.54	2.07	7.43	2.08
						7	8.95	2.03	8.76	2.06	8.59	2.09	8.53	2.10	8.43	2.12	8.29	2.14	8.17	2.16
						10	9.73	2.10	9.53	2.13	9.35	2.16	9.27	2.17	9.19	2.19	9.04	2.21	8.91	2.23
						15	10.70	2.18	10.50	2.22	10.31	2.25	10.22	2.26	10.14	2.27	9.98	2.30	9.84	2.32
2000	2500	5000		9500	119%	-15	4.97	1.70	4.81	1.73	4.67	1.75	4.61	1.76	4.55	1.77	4.45	1.79	4.37	1.80
						-10	5.95	1.79	5.79	1.82	5.64	1.84	5.57	1.85	5.51	1.86	5.40	1.88	5.30	1.90
						-5	6.94	1.88	6.76	1.91	6.61	1.93	6.53	1.94	6.47	1.95	6.35	1.97	6.24	1.99
						0	7.92	1.97	7.74	2.00	7.57	2.02	7.50	2.03	7.43	2.05	7.30	2.07	7.18	2.09
						2	8.32	2.00	8.13	2.03	7.96	2.06	7.88	2.07	7.81	2.08	7.68	2.10	7.56	2.12
						7	9.11	2.07	8.91	2.10	8.74	2.13	8.68	2.14	8.58	2.16	8.44	2.18	8.31	2.20
						10	9.90	2.14	9.70	2.17	9.52	2.20	9.43	2.21	9.35	2.23	9.20	2.25	9.07	2.27
						15	10.89	2.23	10.68	2.26	10.49	2.29	10.40	2.30	10.31	2.32	10.16	2.34	10.02	2.37
2000	2500	6800		11300	141%	-15	5.15	1.79	4.99	1.82	4.85	1.84	4.78	1.85	4.72	1.86	4.61	1.88	4.53	1.89
						-10	6.17	1.88	6.00	1.91	5.85	1.94	5.78	1.95	5.71	1.96	5.60	1.98	5.50	1.99
						-5	7.19	1.98	7.01	2.00	6.85	2.03	6.78	2.04	6.71	2.05	6.58	2.08	6.47	2.09
						0	8.22	2.07	8.03	2.10	7.85	2.13	7.77	2.14	7.70	2.15	7.56	2.17	7.45	2.19
						2	8.62	2.10	8.43	2.14	8.26	2.16	8.17	2.18	8.10	2.19	7.96	2.21	7.84	2.23
						7	9.44	2.18	9.24	2.21	9.06	2.24	9.00	2.25	8.90	2.27	8.75	2.29	8.62	2.31
						10	10.27	2.25	10.06	2.28	9.87	2.31	9.78	2.33	9.69	2.34	9.54	2.37	9.40	2.39
						15	11.29	2.34	11.08	2.38	10.88	2.41	10.78	2.42	10.69	2.44	10.53	2.46	10.38	2.49
2000	3500	3500		9000	113%	-15	4.92	1.70	4.77	1.73	4.63	1.75	4.57	1.76	4.51	1.77	4.41	1.79	4.33	1.80
						-10	5.90	1.79	5.73	1.82	5.59	1.84	5.52	1.85	5.46	1.86	5.35	1.88	5.25	1.90
						-5	6.87	1.88	6.70	1.91	6.55	1.93	6.47	1.94	6.41	1.95	6.29	1.97	6.18	1.99
						0	7.85	1.97	7.67	2.00	7.50	2.02	7.43	2.03	7.36	2.05	7.23	2.07	7.12	2.09
						2	8.24	2.00	8.06	2.03	7.89	2.06	7.81	2.07	7.74	2.08	7.61	2.10	7.49	2.12
						7	9.02	2.07	8.83	2.10	8.66	2.13	8.60	2.14	8.50	2.16	8.36	2.18	8.24	2.20
						10	9.81	2.14	9.61	2.17	9.43	2.20	9.34	2.21	9.26	2.23	9.12	2.25	8.99	2.27
						15	10.79	2.23	10.58	2.26	10.39	2.29	10.30	2.30	10.22	2.32	10.06	2.34	9.92	2.37
2000	3500	5000		10500	131%	-15	5.01	1.71	4.85	1.73	4.71	1.76	4.65	1.77	4.59	1.78	4.49	1.79	4.40	1.81
						-10	6.00	1.80	5.83	1.83	5.69	1.85	5.62	1.86	5.55	1.87	5.44	1.89	5.35	1.91
						-5	6.99	1.89	6.82	1.92	6.66	1.94	6.59	1.95	6.52	1.96	6.40	1.98	6.29	2.00
						0	7.99	1.98	7.80	2.01	7.64	2.03	7.56	2.04	7.49	2.06	7.35	2.08	7.24	2.10
						2	8.39	2.01	8.20	2.04	8.03	2.07	7.95	2.08	7.87	2.09	7.74	2.11	7.62	2.13
						7	9.18	2.08	8.99	2.11	8.81	2.14	8.75	2.15	8.65	2.17	8.51	2.19	8.38	2.21
						10	9.98	2.15	9.78	2.18	9.59	2.21	9.51	2.23	9.42	2.24	9.27	2.26	9.14	2.28
						15	10.98	2.24	10.77	2.27	10.57	2.30	10.48	2.31	10.40	2.33	10.24	2.35	10.10	2.38
2000	5000	5000		12000	150%	-15	5.15	1.79	4.99	1.82	4.85	1.84	4.78	1.85	4.72	1.86	4.61	1.88	4.53	1.89
						-10	6.17	1.88	6.00	1.91	5.85	1.94	5.78	1.95	5.71	1.96	5.60	1.98	5.50	1.99
						-5	7.19	1.98	7.01	2.00	6.85	2.03	6.78	2.04	6.71	2.05	6.58	2.08	6.47	2.09
						0	8.22	2.07	8.03	2.10	7.85	2.13	7.77	2.14	7.70	2.15	7.56	2.17	7.45	2.19
						2	8.62	2.10	8.43	2.14	8.26	2.16	8.17	2.18	8.10	2.19	7.96	2.21	7.84	2.23
						7	9.44	2.18	9.24	2.21	9.06	2.24	9.00	2.25	8.90	2.27	8.75	2.29	8.62	2.31
						10	10.27	2.25	10.06	2.28	9.87	2.31	9.78	2.33	9.69	2.34	9.54	2.37	9.40	2.39
						15	11.29	2.34	11.08	2.38	10.88	2.41	10.78	2.42	10.69	2.44	10.53	2.46	10.38	2.49

12. Capacity Table

12-4. AJ080TXJ4KH/EA

HEATING

Combination (Capacity Index)				Combination (Total)	Combination (%)	Outdoor Temperature (°C,DB)	Indoor Temperature (°C, DB)													
							14		16		18		20		21		22		24	
							TC(kW)	PI(kW)	TC(kW)	PI(kW)	TC(kW)	PI(kW)	TC(kW)	PI(kW)	TC(kW)	PI(kW)	TC(kW)	PI(kW)	TC(kW)	PI(kW)
2500	2500	2500		7500	94%	-15	4.88	1.66	4.72	1.69	4.59	1.71	4.53	1.72	4.47	1.73	4.37	1.74	4.28	1.76
						-10	5.84	1.75	5.68	1.77	5.54	1.80	5.47	1.81	5.41	1.82	5.30	1.84	5.21	1.85
						-5	6.81	1.83	6.64	1.86	6.48	1.89	6.41	1.90	6.35	1.91	6.23	1.93	6.13	1.94
						0	7.78	1.92	7.60	1.95	7.43	1.98	7.36	1.99	7.29	2.00	7.16	2.02	7.05	2.04
						2	8.16	1.95	7.98	1.98	7.82	2.01	7.74	2.02	7.67	2.03	7.53	2.06	7.42	2.07
						7	8.94	2.02	8.75	2.05	8.58	2.08	8.52	2.09	8.42	2.11	8.28	2.13	8.16	2.15
						10	9.72	2.09	9.52	2.12	9.34	2.15	9.26	2.16	9.18	2.18	9.03	2.20	8.90	2.22
						15	10.69	2.17	10.48	2.21	10.30	2.24	10.21	2.25	10.12	2.26	9.97	2.29	9.83	2.31
2500	2500	3500		8500	106%	-15	4.92	1.67	4.76	1.69	4.63	1.72	4.56	1.73	4.51	1.74	4.40	1.75	4.32	1.77
						-10	5.89	1.76	5.73	1.78	5.58	1.81	5.51	1.82	5.45	1.83	5.34	1.85	5.25	1.86
						-5	6.86	1.84	6.69	1.87	6.54	1.90	6.47	1.91	6.40	1.92	6.28	1.94	6.18	1.95
						0	7.84	1.93	7.66	1.96	7.50	1.98	7.42	2.00	7.35	2.01	7.22	2.03	7.11	2.05
						2	8.23	1.96	8.05	1.99	7.88	2.02	7.80	2.03	7.73	2.04	7.60	2.07	7.48	2.08
						7	9.01	2.03	8.82	2.06	8.65	2.09	8.59	2.10	8.49	2.12	8.35	2.14	8.23	2.16
						10	9.80	2.10	9.60	2.13	9.42	2.16	9.33	2.17	9.25	2.19	9.11	2.21	8.98	2.23
						15	10.78	2.18	10.57	2.22	10.38	2.25	10.29	2.26	10.21	2.27	10.05	2.30	9.91	2.32
2500	2500	5000		10000	125%	-15	5.01	1.70	4.85	1.73	4.71	1.75	4.65	1.76	4.59	1.77	4.49	1.79	4.40	1.80
						-10	6.00	1.79	5.83	1.82	5.69	1.84	5.62	1.85	5.55	1.86	5.44	1.88	5.35	1.90
						-5	6.99	1.88	6.82	1.91	6.66	1.93	6.59	1.94	6.52	1.95	6.40	1.97	6.29	1.99
						0	7.99	1.97	7.80	2.00	7.64	2.02	7.56	2.03	7.49	2.05	7.35	2.07	7.24	2.09
						2	8.39	2.00	8.20	2.03	8.03	2.06	7.95	2.07	7.87	2.08	7.74	2.10	7.62	2.12
						7	9.18	2.07	8.99	2.10	8.81	2.13	8.75	2.14	8.65	2.16	8.51	2.18	8.38	2.20
						10	9.98	2.14	9.78	2.17	9.59	2.20	9.51	2.21	9.42	2.23	9.27	2.25	9.14	2.27
						15	10.98	2.23	10.77	2.26	10.57	2.29	10.48	2.30	10.40	2.32	10.24	2.34	10.10	2.37
2500	2500	6800		11800	148%	-15	5.15	1.79	4.99	1.82	4.85	1.84	4.78	1.85	4.72	1.86	4.61	1.88	4.53	1.89
						-10	6.17	1.88	6.00	1.91	5.85	1.94	5.78	1.95	5.71	1.96	5.60	1.98	5.50	1.99
						-5	7.19	1.98	7.01	2.00	6.85	2.03	6.78	2.04	6.71	2.05	6.58	2.08	6.47	2.09
						0	8.22	2.07	8.03	2.10	7.85	2.13	7.77	2.14	7.70	2.15	7.56	2.17	7.45	2.19
						2	8.62	2.10	8.43	2.14	8.26	2.16	8.17	2.18	8.10	2.19	7.96	2.21	7.84	2.23
						7	9.44	2.18	9.24	2.21	9.06	2.24	9.00	2.25	8.90	2.27	8.75	2.29	8.62	2.31
						10	10.27	2.25	10.06	2.28	9.87	2.31	9.78	2.33	9.69	2.34	9.54	2.37	9.40	2.39
						15	11.29	2.34	11.08	2.38	10.88	2.41	10.78	2.42	10.69	2.44	10.53	2.46	10.38	2.49
2500	3500	3500		9500	119%	-15	4.96	1.70	4.80	1.73	4.66	1.75	4.60	1.76	4.54	1.77	4.44	1.79	4.36	1.80
						-10	5.94	1.79	5.77	1.82	5.63	1.84	5.56	1.85	5.50	1.86	5.39	1.88	5.29	1.90
						-5	6.92	1.88	6.75	1.91	6.59	1.93	6.52	1.94	6.45	1.95	6.33	1.97	6.23	1.99
						0	7.90	1.97	7.72	2.00	7.56	2.02	7.48	2.03	7.41	2.05	7.28	2.07	7.17	2.09
						2	8.30	2.00	8.11	2.03	7.94	2.06	7.87	2.07	7.79	2.08	7.66	2.10	7.54	2.12
						7	9.09	2.07	8.89	2.10	8.72	2.13	8.66	2.14	8.56	2.16	8.42	2.18	8.30	2.20
						10	9.88	2.14	9.68	2.17	9.49	2.20	9.41	2.21	9.33	2.23	9.18	2.25	9.05	2.27
						15	10.87	2.23	10.66	2.26	10.46	2.29	10.37	2.30	10.29	2.32	10.13	2.34	9.99	2.37
2500	3500	5000		11000	138%	-15	5.15	1.71	4.99	1.73	4.85	1.76	4.78	1.77	4.72	1.78	4.61	1.79	4.53	1.81
						-10	6.17	1.80	6.00	1.83	5.85	1.85	5.78	1.86	5.71	1.87	5.60	1.89	5.50	1.91
						-5	7.19	1.89	7.01	1.92	6.85	1.94	6.78	1.95	6.71	1.96	6.58	1.98	6.47	2.00
						0	8.22	1.98	8.03	2.01	7.85	2.03	7.77	2.04	7.70	2.06	7.56	2.08	7.45	2.10
						2	8.62	2.01	8.43	2.04	8.26	2.07	8.17	2.08	8.10	2.09	7.96	2.11	7.84	2.13
						7	9.44	2.08	9.24	2.11	9.06	2.14	9.00	2.15	8.90	2.17	8.75	2.19	8.62	2.21
						10	10.27	2.15	10.06	2.18	9.87	2.21	9.78	2.23	9.69	2.24	9.54	2.26	9.40	2.28
						15	11.29	2.24	11.08	2.27	10.88	2.30	10.78	2.31	10.69	2.33	10.53	2.35	10.38	2.38

12. Capacity Table

12-4. AJ080TXJ4KH/EA

HEATING

Combination (Capacity Index)				Combination (Total)	Combination (%)	Outdoor Temperature (°C,DB)	Indoor Temperature (°C, DB)													
							14		16		18		20		21		22		24	
							TC(kW)	PI(kW)	TC(kW)	PI(kW)	TC(kW)	PI(kW)	TC(kW)	PI(kW)	TC(kW)	PI(kW)	TC(kW)	PI(kW)	TC(kW)	PI(kW)
3500	3500	3500		10500	131%	-15	5.00	1.71	4.84	1.73	4.70	1.76	4.64	1.77	4.58	1.78	4.48	1.79	4.39	1.81
						-10	5.99	1.80	5.82	1.83	5.67	1.85	5.60	1.86	5.54	1.87	5.43	1.89	5.33	1.91
						-5	6.98	1.89	6.80	1.92	6.64	1.94	6.57	1.95	6.50	1.96	6.38	1.98	6.28	2.00
						0	7.97	1.98	7.78	2.01	7.62	2.03	7.54	2.04	7.47	2.06	7.34	2.08	7.22	2.10
						2	8.37	2.01	8.18	2.04	8.01	2.07	7.93	2.08	7.86	2.09	7.72	2.11	7.60	2.13
						7	9.16	2.08	8.97	2.11	8.79	2.14	8.73	2.15	8.63	2.17	8.49	2.19	8.36	2.21
						10	9.96	2.15	9.76	2.18	9.57	2.21	9.48	2.23	9.40	2.24	9.25	2.26	9.12	2.28
						15	10.95	2.24	10.74	2.27	10.55	2.30	10.46	2.31	10.37	2.33	10.21	2.35	10.07	2.38
3500	3500	5000		12000	150%	-15	5.15	1.73	4.99	1.76	4.85	1.78	4.78	1.79	4.72	1.80	4.61	1.82	4.53	1.83
						-10	6.17	1.82	6.00	1.85	5.85	1.88	5.78	1.89	5.71	1.90	5.60	1.92	5.50	1.93
						-5	7.19	1.91	7.01	1.94	6.85	1.97	6.78	1.98	6.71	1.99	6.58	2.01	6.47	2.03
						0	8.22	2.00	8.03	2.03	7.85	2.06	7.77	2.07	7.70	2.08	7.56	2.11	7.45	2.12
						2	8.62	2.04	8.43	2.07	8.26	2.10	8.17	2.11	8.10	2.12	7.96	2.14	7.84	2.16
						7	9.44	2.11	9.24	2.14	9.06	2.17	9.00	2.18	8.90	2.20	8.75	2.22	8.62	2.24
						10	10.27	2.18	10.06	2.21	9.87	2.24	9.78	2.26	9.69	2.27	9.54	2.29	9.40	2.32
						15	11.29	2.27	11.08	2.30	10.88	2.33	10.78	2.35	10.69	2.36	10.53	2.39	10.38	2.41
2000	2000	2000	2000	8000	100%	-15	4.88	1.67	4.72	1.69	4.59	1.72	4.53	1.73	4.47	1.74	4.37	1.75	4.28	1.77
						-10	5.84	1.76	5.68	1.78	5.54	1.81	5.47	1.82	5.41	1.83	5.30	1.85	5.21	1.86
						-5	6.81	1.84	6.64	1.87	6.48	1.90	6.41	1.91	6.35	1.92	6.23	1.94	6.13	1.95
						0	7.78	1.93	7.60	1.96	7.43	1.98	7.36	2.00	7.29	2.01	7.16	2.03	7.05	2.05
						2	8.16	1.96	7.98	1.99	7.82	2.02	7.74	2.03	7.67	2.04	7.53	2.07	7.42	2.08
						7	8.94	2.03	8.75	2.06	8.58	2.09	8.52	2.10	8.42	2.12	8.28	2.14	8.16	2.16
						10	9.72	2.10	9.52	2.13	9.34	2.16	9.26	2.17	9.18	2.19	9.03	2.21	8.90	2.23
						15	10.69	2.18	10.48	2.22	10.30	2.25	10.21	2.26	10.12	2.27	9.97	2.30	9.83	2.32
2000	2000	2000	2500	8500	106%	-15	4.91	1.67	4.76	1.69	4.62	1.72	4.56	1.73	4.50	1.74	4.40	1.75	4.32	1.77
						-10	5.88	1.76	5.72	1.78	5.57	1.81	5.51	1.82	5.45	1.83	5.34	1.85	5.24	1.86
						-5	6.86	1.84	6.68	1.87	6.53	1.90	6.46	1.91	6.39	1.92	6.27	1.94	6.17	1.95
						0	7.83	1.93	7.65	1.96	7.49	1.98	7.41	2.00	7.34	2.01	7.21	2.03	7.10	2.05
						2	8.22	1.96	8.04	1.99	7.87	2.02	7.79	2.03	7.72	2.04	7.59	2.07	7.47	2.08
						7	9.00	2.03	8.81	2.06	8.64	2.09	8.58	2.10	8.48	2.12	8.34	2.14	8.22	2.16
						10	9.79	2.10	9.59	2.13	9.41	2.16	9.32	2.17	9.24	2.19	9.09	2.21	8.97	2.23
						15	10.77	2.18	10.56	2.22	10.37	2.25	10.28	2.26	10.19	2.27	10.04	2.30	9.90	2.32
2000	2000	2000	3500	9500	119%	-15	4.95	1.70	4.80	1.73	4.66	1.75	4.60	1.76	4.54	1.77	4.44	1.79	4.35	1.80
						-10	5.93	1.79	5.77	1.82	5.62	1.84	5.55	1.85	5.49	1.86	5.38	1.88	5.28	1.90
						-5	6.91	1.88	6.74	1.91	6.58	1.93	6.51	1.94	6.44	1.95	6.32	1.97	6.22	1.99
						0	7.90	1.97	7.71	2.00	7.55	2.02	7.47	2.03	7.40	2.05	7.27	2.07	7.16	2.09
						2	8.29	2.00	8.10	2.03	7.93	2.06	7.86	2.07	7.78	2.08	7.65	2.10	7.53	2.12
						7	9.08	2.07	8.88	2.10	8.71	2.13	8.65	2.14	8.55	2.16	8.41	2.18	8.29	2.20
						10	9.87	2.14	9.67	2.17	9.48	2.20	9.40	2.21	9.32	2.23	9.17	2.25	9.04	2.27
						15	10.85	2.23	10.64	2.26	10.45	2.29	10.36	2.30	10.28	2.32	10.12	2.34	9.98	2.37
2000	2000	2000	5000	11000	138%	-15	5.15	1.69	4.99	1.72	4.85	1.74	4.78	1.75	4.72	1.76	4.61	1.78	4.53	1.79
						-10	6.17	1.78	6.00	1.81	5.85	1.83	5.78	1.84	5.71	1.85	5.60	1.87	5.50	1.89
						-5	7.19	1.87	7.01	1.90	6.85	1.92	6.78	1.93	6.71	1.95	6.58	1.97	6.47	1.98
						0	8.22	1.96	8.03	1.99	7.85	2.01	7.77	2.03	7.70	2.04	7.56	2.06	7.45	2.08
						2	8.62	1.99	8.43	2.02	8.26	2.05	8.17	2.06	8.10	2.07	7.96	2.09	7.84	2.11
						7	9.44	2.06	9.24	2.09	9.06	2.12	9.00	2.13	8.90	2.15	8.75	2.17	8.62	2.19
						10	10.27	2.13	10.06	2.16	9.87	2.19	9.78	2.20	9.69	2.22	9.54	2.24	9.40	2.26
						15	11.29	2.22	11.08	2.25	10.88	2.28	10.78	2.29	10.69	2.31	10.53	2.33	10.38	2.35

12. Capacity Table

12-4. AJ080TXJ4KH/EA

HEATING

Combination (Capacity Index)				Combination (Total)	Combination (%)	Outdoor Temperature (°C,DB)	Indoor Temperature (°C, DB)													
							14		16		18		20		21		22		24	
							TC(kW)	PI(kW)	TC(kW)	PI(kW)	TC(kW)	PI(kW)	TC(kW)	PI(kW)	TC(kW)	PI(kW)	TC(kW)	PI(kW)	TC(kW)	PI(kW)
2000	2000	2500	2500	9000	113%	-15	4.95	1.70	4.79	1.73	4.65	1.75	4.59	1.76	4.53	1.77	4.43	1.79	4.35	1.80
						-10	5.92	1.79	5.76	1.82	5.61	1.84	5.55	1.85	5.48	1.86	5.37	1.88	5.28	1.90
						-5	6.90	1.88	6.73	1.91	6.58	1.93	6.50	1.94	6.44	1.95	6.32	1.97	6.21	1.99
						0	7.89	1.97	7.70	2.00	7.54	2.02	7.46	2.03	7.39	2.05	7.26	2.07	7.15	2.09
						2	8.28	2.00	8.09	2.03	7.93	2.06	7.85	2.07	7.77	2.08	7.64	2.10	7.53	2.12
						7	9.07	2.07	8.87	2.10	8.70	2.13	8.64	2.14	8.54	2.16	8.40	2.18	8.28	2.20
						10	9.85	2.14	9.65	2.17	9.47	2.20	9.39	2.21	9.31	2.23	9.16	2.25	9.03	2.27
						15	10.84	2.23	10.63	2.26	10.44	2.29	10.35	2.30	10.27	2.32	10.11	2.34	9.97	2.37
2000	2000	2500	3500	10000	125%	-15	4.99	1.70	4.83	1.73	4.69	1.75	4.63	1.76	4.57	1.77	4.47	1.79	4.38	1.80
						-10	5.97	1.79	5.81	1.82	5.66	1.84	5.59	1.85	5.53	1.86	5.42	1.88	5.32	1.90
						-5	6.96	1.88	6.79	1.91	6.63	1.93	6.56	1.94	6.49	1.95	6.37	1.97	6.26	1.99
						0	7.95	1.97	7.77	2.00	7.60	2.02	7.52	2.03	7.45	2.05	7.32	2.07	7.21	2.09
						2	8.35	2.00	8.16	2.03	7.99	2.06	7.91	2.07	7.84	2.08	7.70	2.10	7.59	2.12
						7	9.14	2.07	8.95	2.10	8.77	2.13	8.71	2.14	8.61	2.16	8.47	2.18	8.34	2.20
						10	9.93	2.14	9.73	2.17	9.55	2.20	9.46	2.21	9.38	2.23	9.23	2.25	9.10	2.27
						15	10.93	2.23	10.72	2.26	10.52	2.29	10.43	2.30	10.35	2.32	10.19	2.34	10.05	2.37
2000	2000	2500	5000	11500	144%	-15	5.15	1.69	4.99	1.72	4.85	1.74	4.78	1.75	4.72	1.76	4.61	1.78	4.53	1.79
						-10	6.17	1.78	6.00	1.81	5.85	1.83	5.78	1.84	5.71	1.85	5.60	1.87	5.50	1.89
						-5	7.19	1.87	7.01	1.90	6.85	1.92	6.78	1.93	6.71	1.95	6.58	1.97	6.47	1.98
						0	8.22	1.96	8.03	1.99	7.85	2.01	7.77	2.03	7.70	2.04	7.56	2.06	7.45	2.08
						2	8.62	1.99	8.43	2.02	8.26	2.05	8.17	2.06	8.10	2.07	7.96	2.09	7.84	2.11
						7	9.44	2.06	9.24	2.09	9.06	2.12	9.00	2.13	8.90	2.15	8.75	2.17	8.62	2.19
						10	10.27	2.13	10.06	2.16	9.87	2.19	9.78	2.20	9.69	2.22	9.54	2.24	9.40	2.26
						15	11.29	2.22	11.08	2.25	10.88	2.28	10.78	2.29	10.69	2.31	10.53	2.33	10.38	2.35
2000	2000	3500	3500	11000	138%	-15	5.03	1.73	4.87	1.76	4.73	1.78	4.67	1.79	4.61	1.80	4.50	1.82	4.42	1.83
						-10	6.02	1.82	5.85	1.85	5.70	1.88	5.64	1.89	5.57	1.90	5.46	1.92	5.36	1.93
						-5	7.02	1.91	6.84	1.94	6.68	1.97	6.61	1.98	6.54	1.99	6.42	2.01	6.31	2.03
						0	8.01	2.00	7.83	2.03	7.66	2.06	7.58	2.07	7.51	2.08	7.38	2.11	7.27	2.12
						2	8.41	2.04	8.22	2.07	8.05	2.10	7.97	2.11	7.90	2.12	7.76	2.14	7.65	2.16
						7	9.21	2.11	9.02	2.14	8.84	2.17	8.78	2.18	8.68	2.20	8.54	2.22	8.41	2.24
						10	10.01	2.18	9.81	2.21	9.63	2.24	9.54	2.26	9.46	2.27	9.31	2.29	9.17	2.32
						15	11.02	2.27	10.80	2.30	10.61	2.33	10.52	2.35	10.43	2.36	10.27	2.39	10.13	2.41
2000	2500	2500	2500	9500	119%	-15	4.97	1.70	4.82	1.73	4.68	1.75	4.62	1.76	4.56	1.77	4.46	1.79	4.37	1.80
						-10	5.96	1.79	5.79	1.82	5.65	1.84	5.58	1.85	5.52	1.86	5.40	1.88	5.31	1.90
						-5	6.94	1.88	6.77	1.91	6.61	1.93	6.54	1.94	6.47	1.95	6.35	1.97	6.25	1.99
						0	7.93	1.97	7.75	2.00	7.58	2.02	7.51	2.03	7.43	2.05	7.30	2.07	7.19	2.09
						2	8.33	2.00	8.14	2.03	7.97	2.06	7.89	2.07	7.82	2.08	7.69	2.10	7.57	2.12
						7	9.12	2.07	8.92	2.10	8.75	2.13	8.69	2.14	8.59	2.16	8.45	2.18	8.32	2.20
						10	9.91	2.14	9.71	2.17	9.53	2.20	9.44	2.21	9.36	2.23	9.21	2.25	9.08	2.27
						15	10.90	2.23	10.69	2.26	10.50	2.29	10.41	2.30	10.33	2.32	10.17	2.34	10.03	2.37
2000	2500	2500	3500	10500	131%	-15	5.02	1.73	4.86	1.76	4.72	1.78	4.65	1.79	4.60	1.80	4.49	1.82	4.41	1.83
						-10	6.01	1.82	5.84	1.85	5.69	1.88	5.62	1.89	5.56	1.90	5.45	1.92	5.35	1.93
						-5	7.00	1.91	6.83	1.94	6.67	1.97	6.59	1.98	6.53	1.99	6.40	2.01	6.30	2.03
						0	8.00	2.00	7.81	2.03	7.64	2.06	7.57	2.07	7.49	2.08	7.36	2.11	7.25	2.12
						2	8.39	2.04	8.21	2.07	8.04	2.10	7.96	2.11	7.88	2.12	7.75	2.14	7.63	2.16
						7	9.19	2.11	9.00	2.14	8.82	2.17	8.76	2.18	8.66	2.20	8.52	2.22	8.39	2.24
						10	9.99	2.18	9.79	2.21	9.60	2.24	9.52	2.26	9.44	2.27	9.29	2.29	9.15	2.32
						15	10.99	2.27	10.78	2.30	10.59	2.33	10.49	2.35	10.41	2.36	10.25	2.39	10.11	2.41

12. Capacity Table

12-4. AJ080TXJ4KH/EA

HEATING

Combination (Capacity Index)				Combination (Total)	Combination (%)	Outdoor Temperature (°C,DB)	Indoor Temperature (°C, DB)													
							14		16		18		20		21		22		24	
							TC(kW)	PI(kW)	TC(kW)	PI(kW)	TC(kW)	PI(kW)	TC(kW)	PI(kW)	TC(kW)	PI(kW)	TC(kW)	PI(kW)	TC(kW)	PI(kW)
2000	2500	2500	5000	12000	150%	-15	5.15	1.69	4.99	1.72	4.85	1.74	4.78	1.75	4.72	1.76	4.61	1.78	4.53	1.79
						-10	6.17	1.78	6.00	1.81	5.85	1.83	5.78	1.84	5.71	1.85	5.60	1.87	5.50	1.89
						-5	7.19	1.87	7.01	1.90	6.85	1.92	6.78	1.93	6.71	1.95	6.58	1.97	6.47	1.98
						0	8.22	1.96	8.03	1.99	7.85	2.01	7.77	2.03	7.70	2.04	7.56	2.06	7.45	2.08
						2	8.62	1.99	8.43	2.02	8.26	2.05	8.17	2.06	8.10	2.07	7.96	2.09	7.84	2.11
						7	9.44	2.06	9.24	2.09	9.06	2.12	9.00	2.13	8.90	2.15	8.75	2.17	8.62	2.19
						10	10.27	2.13	10.06	2.16	9.87	2.19	9.78	2.20	9.69	2.22	9.54	2.24	9.40	2.26
						15	11.29	2.22	11.08	2.25	10.88	2.28	10.78	2.29	10.69	2.31	10.53	2.33	10.38	2.35
2000	2500	3500	3500	11500	144%	-15	5.15	1.69	4.99	1.72	4.85	1.74	4.78	1.75	4.72	1.76	4.61	1.78	4.53	1.79
						-10	6.17	1.78	6.00	1.81	5.85	1.83	5.78	1.84	5.71	1.85	5.60	1.87	5.50	1.89
						-5	7.19	1.87	7.01	1.90	6.85	1.92	6.78	1.93	6.71	1.95	6.58	1.97	6.47	1.98
						0	8.22	1.96	8.03	1.99	7.85	2.01	7.77	2.03	7.70	2.04	7.56	2.06	7.45	2.08
						2	8.62	1.99	8.43	2.02	8.26	2.05	8.17	2.06	8.10	2.07	7.96	2.09	7.84	2.11
						7	9.44	2.06	9.24	2.09	9.06	2.12	9.00	2.13	8.90	2.15	8.75	2.17	8.62	2.19
						10	10.27	2.13	10.06	2.16	9.87	2.19	9.78	2.20	9.69	2.22	9.54	2.24	9.40	2.26
						15	11.29	2.22	11.08	2.25	10.88	2.28	10.78	2.29	10.69	2.31	10.53	2.33	10.38	2.35
2500	2500	2500	2500	10000	125%	-15	5.02	1.70	4.86	1.73	4.72	1.75	4.65	1.76	4.60	1.77	4.49	1.79	4.41	1.80
						-10	6.01	1.79	5.84	1.82	5.69	1.84	5.62	1.85	5.56	1.86	5.45	1.88	5.35	1.90
						-5	7.00	1.88	6.83	1.91	6.67	1.93	6.59	1.94	6.53	1.95	6.40	1.97	6.30	1.99
						0	8.00	1.97	7.81	2.00	7.64	2.02	7.57	2.03	7.49	2.05	7.36	2.07	7.25	2.09
						2	8.39	2.00	8.21	2.03	8.04	2.06	7.96	2.07	7.88	2.08	7.75	2.10	7.63	2.12
						7	9.19	2.07	9.00	2.10	8.82	2.13	8.76	2.14	8.66	2.16	8.52	2.18	8.39	2.20
						10	9.99	2.14	9.79	2.17	9.60	2.20	9.52	2.21	9.44	2.23	9.29	2.25	9.15	2.27
						15	10.99	2.23	10.78	2.26	10.59	2.29	10.49	2.30	10.41	2.32	10.25	2.34	10.11	2.37
2500	2500	2500	3500	11000	138%	-15	5.15	1.69	4.99	1.72	4.85	1.74	4.78	1.75	4.72	1.76	4.61	1.78	4.53	1.79
						-10	6.17	1.78	6.00	1.81	5.85	1.83	5.78	1.84	5.71	1.85	5.60	1.87	5.50	1.89
						-5	7.19	1.87	7.01	1.90	6.85	1.92	6.78	1.93	6.71	1.95	6.58	1.97	6.47	1.98
						0	8.22	1.96	8.03	1.99	7.85	2.01	7.77	2.03	7.70	2.04	7.56	2.06	7.45	2.08
						2	8.62	1.99	8.43	2.02	8.26	2.05	8.17	2.06	8.10	2.07	7.96	2.09	7.84	2.11
						7	9.44	2.06	9.24	2.09	9.06	2.12	9.00	2.13	8.90	2.15	8.75	2.17	8.62	2.19
						10	10.27	2.13	10.06	2.16	9.87	2.19	9.78	2.20	9.69	2.22	9.54	2.24	9.40	2.26
						15	11.29	2.22	11.08	2.25	10.88	2.28	10.78	2.29	10.69	2.31	10.53	2.33	10.38	2.35
2500	2500	3500	3500	12000	150%	-15	5.15	1.69	4.99	1.72	4.85	1.74	4.72	1.76	4.67	1.77	4.61	1.78	4.53	1.79
						-10	6.17	1.78	6.00	1.81	5.85	1.83	5.71	1.85	5.65	1.86	5.60	1.87	5.50	1.89
						-5	7.19	1.87	7.01	1.90	6.85	1.92	6.71	1.95	6.64	1.96	6.58	1.97	6.47	1.98
						0	8.22	1.96	8.03	1.99	7.85	2.01	7.70	2.04	7.63	2.05	7.56	2.06	7.45	2.08
						2	8.62	1.99	8.43	2.02	8.26	2.05	8.10	2.07	8.03	2.08	7.96	2.09	7.84	2.11
						7	9.65	2.08	9.45	2.11	9.26	2.14	9.00	2.13	9.02	2.18	8.95	2.19	8.82	2.21
						10	10.27	2.13	10.06	2.16	9.87	2.19	9.69	2.22	9.61	2.23	9.54	2.24	9.40	2.26
						15	11.29	2.22	11.08	2.25	10.88	2.28	10.69	2.31	10.61	2.32	10.53	2.33	10.38	2.35

NOTE

1. Cooling capacity is based on 27°CDB / 19°CWB (indoor temperature), 35°CDB (outdoor temperature).
2. Heating capacity is based on 20°CDB (indoor temperature), 7°CDB/6°CWB (outdoor temperature).
3. The above is the value for connecting with the following indoor units.
   - AJ***TNAPKH : Premium Wind Free
4. Capacities are based on the following conditions:
   - Corresponding refrigerant piping length : 5m / - Level difference : 0m
5. The total ability of connected a indoor unit is up to 12kW
6. It is impossible to connect the indoor unit for one room only.
7. This data is reference data for temperature capacity trend.

12. Capacity Table

12-5. AJ100TXJ5KH/EA

COOLING

Combination (Capacity Index)					Combination (Total)	Combination (%)	Outdoor Temperature (°C,DB)	Indoor Temperature (°C, WB)													
								14		16		18		19		20		22		24	
								TC(kW)	PI(kW)	TC(kW)	PI(kW)	TC(kW)	PI(kW)	TC(kW)	PI(kW)	TC(kW)	PI(kW)	TC(kW)	PI(kW)	TC(kW)	PI(kW)
							10	1.60	0.56	2.32	0.62	2.42	0.67	2.46	0.70	2.51	0.72	2.61	0.75	2.71	0.78
							12	1.60	0.58	2.28	0.64	2.38	0.69	2.43	0.72	2.48	0.74	2.57	0.77	2.67	0.79
							14	1.60	0.61	2.24	0.66	2.34	0.71	2.39	0.74	2.44	0.75	2.53	0.79	2.63	0.81
							16	1.60	0.63	2.21	0.69	2.30	0.74	2.35	0.76	2.40	0.77	2.50	0.80	2.59	0.82
							18	1.60	0.66	2.17	0.71	2.27	0.76	2.31	0.78	2.36	0.79	2.46	0.82	2.55	0.84
							20	1.60	0.69	2.13	0.74	2.23	0.78	2.28	0.80	2.32	0.81	2.42	0.84	2.52	0.86
							21	1.60	0.70	2.12	0.75	2.21	0.79	2.26	0.81	2.30	0.83	2.40	0.85	2.50	0.86
							23	1.60	0.73	2.08	0.78	2.17	0.82	2.22	0.83	2.27	0.85	2.36	0.87	2.46	0.88
							25	1.60	0.75	2.04	0.80	2.14	0.84	2.18	0.85	2.23	0.87	2.32	0.89	2.42	0.90
2000					2000	20%	27	1.60	0.78	2.01	0.83	2.10	0.86	2.15	0.88	2.19	0.89	2.29	0.91	2.38	0.92
							29	1.60	0.81	1.97	0.85	2.06	0.89	2.11	0.90	2.16	0.91	2.25	0.93	2.34	0.93
							31	1.60	0.84	1.94	0.88	2.03	0.91	2.07	0.92	2.12	0.93	2.21	0.95	2.30	0.95
							33	1.60	0.87	1.90	0.91	1.99	0.94	2.04	0.95	2.08	0.96	2.17	0.97	2.27	0.97
							35	1.60	0.90	1.86	0.93	1.95	0.96	2.00	0.96	2.04	0.98	2.14	0.99	2.23	0.99
							37	1.60	0.93	1.83	0.96	1.92	0.99	1.96	1.00	2.01	1.00	2.10	1.01	2.19	1.01
							39	1.60	0.96	1.79	0.99	1.88	1.01	1.93	1.02	1.97	1.03	2.06	1.03	2.15	1.03
							42	1.58	1.01	1.74	1.03	1.83	1.06	1.87	1.06	1.92	1.07	2.01	1.07	2.10	1.06
							44	1.50	1.04	1.71	1.06	1.79	1.08	1.84	1.09	1.88	1.09	1.97	1.09	2.06	1.08
							46	1.46	1.07	1.67	1.09	1.76	1.11	1.80	1.11	1.84	1.12	1.93	1.12	2.02	1.10
							10	2.00	0.64	2.90	0.71	3.02	0.77	3.08	0.80	3.14	0.82	3.26	0.86	3.39	0.89
							12	2.00	0.67	2.85	0.73	2.97	0.79	3.03	0.82	3.09	0.84	3.22	0.88	3.34	0.91
							14	2.00	0.69	2.80	0.76	2.93	0.82	2.99	0.84	3.05	0.86	3.17	0.90	3.29	0.93
							16	2.00	0.72	2.76	0.79	2.88	0.84	2.94	0.87	3.00	0.89	3.12	0.92	3.24	0.94
							18	2.00	0.75	2.71	0.82	2.83	0.87	2.89	0.89	2.95	0.91	3.07	0.94	3.19	0.96
							20	2.00	0.79	2.67	0.85	2.79	0.89	2.85	0.92	2.90	0.93	3.02	0.96	3.14	0.98
							21	2.00	0.80	2.64	0.86	2.76	0.91	2.82	0.93	2.88	0.95	3.00	0.97	3.12	0.99
							23	2.00	0.83	2.60	0.89	2.72	0.93	2.78	0.95	2.83	0.97	2.95	0.99	3.07	1.01
							25	2.00	0.86	2.55	0.92	2.67	0.96	2.73	0.98	2.79	0.99	2.91	1.02	3.02	1.03
2500					2500	25%	27	2.00	0.90	2.51	0.95	2.62	0.99	2.68	1.01	2.74	1.02	2.86	1.04	2.98	1.05
							29	2.00	0.93	2.46	0.98	2.58	1.02	2.64	1.03	2.69	1.04	2.81	1.06	2.93	1.07
							31	2.00	0.96	2.42	1.01	2.53	1.04	2.59	1.06	2.65	1.07	2.76	1.09	2.88	1.09
							33	2.00	1.00	2.37	1.04	2.49	1.07	2.54	1.09	2.60	1.10	2.72	1.11	2.83	1.11
							35	2.00	1.03	2.33	1.07	2.44	1.10	2.50	1.10	2.56	1.12	2.67	1.13	2.78	1.14
							37	2.00	1.06	2.29	1.10	2.40	1.13	2.45	1.14	2.51	1.15	2.62	1.16	2.74	1.16
							39	2.00	1.10	2.24	1.14	2.35	1.16	2.41	1.17	2.46	1.18	2.58	1.19	2.69	1.18
							42	1.98	1.15	2.18	1.19	2.29	1.21	2.34	1.22	2.40	1.22	2.51	1.22	2.62	1.22
							44	1.88	1.19	2.13	1.22	2.24	1.24	2.30	1.25	2.35	1.25	2.46	1.25	2.57	1.24
							46	1.83	1.22	2.09	1.25	2.20	1.27	2.25	1.28	2.30	1.28	2.41	1.28	2.53	1.27

12. Capacity Table

12-5. AJ100TXJ5KH/EA

COOLING

Combination (Capacity Index)					Combination (Total)	Combination (%)	Outdoor Temperature (°C,DB)	Indoor Temperature (°C, WB)													
								14		16		18		19		20		22		24	
								TC(kW)	PI(kW)	TC(kW)	PI(kW)	TC(kW)	PI(kW)	TC(kW)	PI(kW)	TC(kW)	PI(kW)	TC(kW)	PI(kW)	TC(kW)	PI(kW)
3500					3500	35%	10	2.80	0.79	4.06	0.88	4.23	0.95	4.31	0.98	4.40	1.01	4.57	1.06	4.74	1.10
							12	2.80	0.82	3.99	0.91	4.16	0.98	4.25	1.01	4.33	1.04	4.50	1.09	4.68	1.12
							14	2.80	0.86	3.93	0.94	4.10	1.01	4.18	1.04	4.26	1.07	4.44	1.11	4.61	1.14
							16	2.80	0.90	3.86	0.98	4.03	1.04	4.11	1.07	4.20	1.10	4.37	1.14	4.54	1.17
							18	2.80	0.93	3.80	1.01	3.96	1.07	4.05	1.10	4.13	1.13	4.30	1.16	4.47	1.19
							20	2.80	0.97	3.73	1.04	3.90	1.11	3.98	1.13	4.07	1.15	4.23	1.19	4.40	1.21
							21	2.80	0.99	3.70	1.06	3.87	1.12	3.95	1.15	4.03	1.17	4.20	1.20	4.37	1.22
							23	2.80	1.03	3.64	1.10	3.80	1.15	3.89	1.18	3.97	1.20	4.13	1.23	4.30	1.25
							25	2.80	1.07	3.58	1.13	3.74	1.19	3.82	1.21	3.90	1.23	4.07	1.26	4.23	1.27
							27	2.80	1.11	3.51	1.17	3.67	1.22	3.76	1.24	3.84	1.26	4.00	1.29	4.17	1.30
							29	2.80	1.15	3.45	1.21	3.61	1.26	3.69	1.28	3.77	1.29	3.93	1.31	4.10	1.32
							31	2.80	1.19	3.39	1.25	3.55	1.29	3.63	1.31	3.71	1.32	3.87	1.34	4.03	1.35
							33	2.80	1.23	3.32	1.29	3.48	1.33	3.56	1.34	3.64	1.36	3.80	1.37	3.97	1.38
							35	2.80	1.27	3.26	1.32	3.42	1.36	3.50	1.36	3.58	1.39	3.74	1.40	3.90	1.40
							37	2.80	1.32	3.20	1.36	3.36	1.40	3.43	1.41	3.51	1.42	3.67	1.43	3.83	1.43
							39	2.80	1.36	3.14	1.40	3.29	1.44	3.37	1.45	3.45	1.46	3.61	1.47	3.77	1.46
							42	2.77	1.42	3.05	1.47	3.20	1.49	3.28	1.50	3.35	1.51	3.51	1.51	3.67	1.50
							44	2.63	1.47	2.98	1.51	3.14	1.53	3.21	1.54	3.29	1.55	3.45	1.55	3.60	1.53
							46	2.56	1.51	2.92	1.55	3.07	1.57	3.15	1.58	3.23	1.58	3.38	1.58	3.54	1.56
5000					5000	50%	10	4.00	1.14	5.79	1.27	6.04	1.38	6.16	1.43	6.28	1.47	6.53	1.54	6.78	1.60
							12	4.00	1.19	5.70	1.32	5.94	1.42	6.07	1.47	6.19	1.51	6.43	1.58	6.68	1.63
							14	4.00	1.24	5.61	1.36	5.85	1.47	5.97	1.51	6.09	1.55	6.34	1.61	6.58	1.66
							16	4.00	1.30	5.52	1.41	5.76	1.51	5.88	1.55	6.00	1.59	6.24	1.65	6.48	1.69
							18	4.00	1.35	5.43	1.46	5.66	1.56	5.78	1.59	5.90	1.63	6.14	1.68	6.39	1.72
							20	4.00	1.41	5.34	1.51	5.57	1.60	5.69	1.64	5.81	1.67	6.05	1.72	6.29	1.76
							21	4.00	1.43	5.29	1.54	5.53	1.63	5.64	1.66	5.76	1.69	6.00	1.74	6.24	1.77
							23	4.00	1.49	5.20	1.59	5.43	1.67	5.55	1.71	5.67	1.74	5.91	1.78	6.14	1.81
							25	4.00	1.55	5.11	1.64	5.34	1.72	5.46	1.75	5.57	1.78	5.81	1.82	6.05	1.84
							27	4.00	1.60	5.02	1.70	5.25	1.77	5.37	1.80	5.48	1.83	5.72	1.86	5.95	1.88
							29	4.00	1.66	4.93	1.75	5.16	1.82	5.27	1.85	5.39	1.87	5.62	1.90	5.86	1.92
							31	4.00	1.72	4.84	1.81	5.07	1.87	5.18	1.90	5.30	1.92	5.53	1.95	5.76	1.95
							33	4.00	1.78	4.75	1.86	4.98	1.92	5.09	1.95	5.20	1.96	5.43	1.99	5.66	1.99
							35	4.00	1.84	4.66	1.92	4.89	1.98	5.00	1.97	5.11	2.01	5.34	2.03	5.57	2.03
							37	4.00	1.91	4.57	1.98	4.79	2.03	4.91	2.05	5.02	2.06	5.25	2.08	5.47	2.07
							39	4.00	1.97	4.48	2.03	4.70	2.08	4.82	2.10	4.93	2.11	5.15	2.12	5.38	2.11
							42	3.95	2.06	4.35	2.12	4.57	2.17	4.68	2.18	4.79	2.19	5.01	2.19	5.24	2.18
							44	3.75	2.13	4.26	2.18	4.48	2.22	4.59	2.23	4.70	2.24	4.92	2.24	5.14	2.22
							46	3.65	2.19	4.18	2.25	4.39	2.28	4.50	2.29	4.61	2.29	4.83	2.29	5.05	2.27

12. Capacity Table

12-5. AJ100TXJ5KH/EA

COOLING

Combination (Capacity Index)					Combination (Total)	Combination (%)	Outdoor Temperature (°C,DB)	Indoor Temperature (°C, WB)													
								14		16		18		19		20		22		24	
								TC(kW)	PI(kW)	TC(kW)	PI(kW)	TC(kW)	PI(kW)	TC(kW)	PI(kW)	TC(kW)	PI(kW)	TC(kW)	PI(kW)	TC(kW)	PI(kW)
							10	4.96	1.38	7.18	1.53	7.49	1.67	7.64	1.72	7.79	1.78	8.10	1.86	8.40	1.93
							12	4.96	1.44	7.07	1.59	7.37	1.72	7.52	1.77	7.67	1.82	7.98	1.90	8.28	1.96
							14	4.96	1.50	6.96	1.65	7.25	1.77	7.40	1.82	7.55	1.87	7.86	1.95	8.16	2.00
							16	4.96	1.57	6.84	1.71	7.14	1.82	7.29	1.87	7.44	1.92	7.74	1.99	8.04	2.04
							18	4.96	1.63	6.73	1.77	7.02	1.88	7.17	1.93	7.32	1.97	7.62	2.04	7.92	2.08
							20	4.96	1.70	6.62	1.83	6.91	1.94	7.06	1.98	7.20	2.02	7.50	2.08	7.80	2.12
							21	4.96	1.73	6.56	1.86	6.85	1.96	7.00	2.01	7.15	2.05	7.44	2.10	7.74	2.14
							23	4.96	1.80	6.45	1.92	6.74	2.02	6.88	2.06	7.03	2.10	7.32	2.15	7.62	2.18
							25	4.96	1.87	6.33	1.99	6.62	2.08	6.77	2.12	6.91	2.15	7.20	2.20	7.50	2.23
6800					6800	68%	27	4.96	1.94	6.22	2.05	6.51	2.14	6.65	2.17	6.80	2.21	7.09	2.25	7.38	2.27
							29	4.96	2.01	6.11	2.12	6.40	2.20	6.54	2.23	6.68	2.26	6.97	2.30	7.26	2.31
							31	4.96	2.08	6.00	2.18	6.28	2.26	6.42	2.29	6.57	2.32	6.85	2.35	7.14	2.36
							33	4.96	2.15	5.89	2.25	6.17	2.32	6.31	2.35	6.45	2.37	6.74	2.40	7.02	2.41
							35	4.96	2.23	5.78	2.32	6.06	2.39	6.20	2.38	6.34	2.43	6.62	2.46	6.91	2.46
							37	4.96	2.30	5.67	2.39	5.95	2.45	6.08	2.47	6.22	2.49	6.51	2.51	6.79	2.50
							39	4.96	2.38	5.56	2.46	5.83	2.52	5.97	2.54	6.11	2.55	6.39	2.56	6.67	2.55
							42	4.90	2.49	5.39	2.57	5.67	2.62	5.80	2.63	5.94	2.64	6.22	2.65	6.50	2.63
							44	4.65	2.57	5.29	2.64	5.56	2.68	5.69	2.70	5.83	2.71	6.10	2.71	6.38	2.68
							46	4.53	2.65	5.18	2.71	5.45	2.75	5.58	2.76	5.72	2.77	5.99	2.76	6.26	2.74
							10	3.53	0.89	4.99	0.91	5.08	0.93	5.14	0.94	5.20	0.95	5.35	0.97	5.52	0.99
							12	3.53	0.91	4.85	0.93	4.95	0.95	5.01	0.96	5.08	0.97	5.23	0.99	5.41	1.01
							14	3.53	0.93	4.72	0.95	4.83	0.97	4.89	0.98	4.96	0.99	5.12	1.01	5.31	1.03
							16	3.53	0.95	4.60	0.98	4.71	1.00	4.78	1.01	4.85	1.02	5.02	1.04	5.21	1.06
							18	3.53	0.98	4.48	1.00	4.60	1.02	4.67	1.03	4.75	1.04	4.92	1.06	5.12	1.08
							20	3.53	1.00	4.36	1.02	4.49	1.05	4.57	1.06	4.65	1.07	4.83	1.09	5.03	1.11
							21	3.53	1.02	4.31	1.04	4.44	1.06	4.52	1.07	4.60	1.08	4.78	1.10	4.99	1.12
							23	3.53	1.04	4.20	1.06	4.34	1.08	4.42	1.09	4.51	1.10	4.70	1.12	4.91	1.14
							25	3.53	1.07	4.10	1.09	4.25	1.11	4.33	1.12	4.42	1.13	4.62	1.15	4.84	1.17
2000	2000				4000	40%	27	3.53	1.10	4.01	1.12	4.16	1.14	4.25	1.15	4.34	1.16	4.55	1.18	4.78	1.20
							29	3.53	1.12	3.92	1.14	4.08	1.17	4.17	1.18	4.27	1.19	4.48	1.21	4.72	1.22
							31	3.53	1.15	3.84	1.17	4.01	1.19	4.10	1.20	4.20	1.21	4.42	1.23	4.66	1.25
							33	3.53	1.18	3.76	1.20	3.94	1.22	4.03	1.23	4.13	1.24	4.36	1.26	4.61	1.28
							35	3.53	1.21	3.69	1.23	3.87	1.25	4.00	1.26	4.08	1.27	4.31	1.29	4.57	1.31
							37	3.53	1.24	3.62	1.26	3.81	1.28	3.91	1.29	4.02	1.30	4.26	1.32	4.53	1.34
							39	3.53	1.27	3.56	1.29	3.76	1.31	3.86	1.32	3.98	1.33	4.22	1.35	4.49	1.37
							42	3.53	1.32	3.48	1.34	3.69	1.36	3.80	1.37	3.92	1.38	4.17	1.40	4.46	1.42
							44	3.53	1.35	3.44	1.38	3.65	1.40	3.76	1.41	3.89	1.41	4.15	1.43	4.44	1.45
							46	3.53	1.39	3.39	1.41	3.61	1.43	3.73	1.44	3.86	1.45	4.13	1.47	4.42	1.48

12. Capacity Table

12-5. AJ100TXJ5KH/EA

COOLING

Combination (Capacity Index)					Combination (Total)	Combination (%)	Outdoor Temperature (°C,DB)	Indoor Temperature (°C, WB)													
								14		16		18		19		20		22		24	
								TC(kW)	PI(kW)	TC(kW)	PI(kW)	TC(kW)	PI(kW)	TC(kW)	PI(kW)	TC(kW)	PI(kW)	TC(kW)	PI(kW)	TC(kW)	PI(kW)
2000	2500				4500	45%	10	3.98	0.98	5.61	1.01	5.72	1.03	5.78	1.04	5.85	1.06	6.01	1.08	6.21	1.10
							12	3.98	1.01	5.46	1.03	5.57	1.06	5.64	1.07	5.71	1.08	5.89	1.10	6.09	1.12
							14	3.98	1.03	5.31	1.06	5.43	1.08	5.50	1.09	5.58	1.11	5.76	1.13	5.97	1.15
							16	3.98	1.06	5.17	1.08	5.30	1.11	5.38	1.12	5.46	1.13	5.65	1.15	5.86	1.17
							18	3.98	1.09	5.04	1.11	5.17	1.13	5.25	1.15	5.34	1.16	5.53	1.18	5.76	1.20
							20	3.98	1.11	4.91	1.14	5.05	1.16	5.14	1.17	5.23	1.19	5.43	1.21	5.66	1.23
							21	3.98	1.13	4.85	1.15	5.00	1.18	5.08	1.19	5.17	1.20	5.38	1.22	5.62	1.24
							23	3.98	1.16	4.73	1.18	4.89	1.21	4.98	1.22	5.07	1.23	5.29	1.25	5.53	1.27
							25	3.98	1.19	4.62	1.21	4.78	1.23	4.87	1.25	4.98	1.26	5.20	1.28	5.45	1.30
							27	3.98	1.22	4.51	1.24	4.68	1.26	4.78	1.28	4.88	1.29	5.11	1.31	5.37	1.33
							29	3.98	1.25	4.41	1.27	4.59	1.30	4.69	1.31	4.80	1.32	5.04	1.34	5.30	1.36
							31	3.98	1.28	4.32	1.30	4.51	1.33	4.61	1.34	4.72	1.35	4.97	1.37	5.24	1.39
							33	3.98	1.31	4.23	1.34	4.43	1.36	4.54	1.37	4.65	1.38	4.90	1.40	5.19	1.42
							35	3.98	1.35	4.15	1.37	4.35	1.39	4.50	1.40	4.59	1.41	4.85	1.44	5.14	1.46
							37	3.98	1.38	4.08	1.40	4.29	1.43	4.40	1.44	4.53	1.45	4.80	1.47	5.09	1.49
							39	3.98	1.41	4.01	1.44	4.23	1.46	4.35	1.47	4.48	1.48	4.75	1.50	5.06	1.52
							42	3.98	1.47	3.92	1.49	4.15	1.51	4.27	1.52	4.41	1.54	4.70	1.56	5.01	1.58
							44	3.98	1.50	3.87	1.53	4.10	1.55	4.23	1.56	4.37	1.57	4.67	1.59	4.99	1.61
							46	3.98	1.54	3.82	1.57	4.07	1.59	4.20	1.60	4.34	1.61	4.64	1.63	4.98	1.65
2000	3500				5500	55%	10	4.86	1.23	6.86	1.26	6.99	1.29	7.06	1.31	7.15	1.32	7.35	1.35	7.59	1.37
							12	4.86	1.26	6.67	1.29	6.81	1.32	6.89	1.34	6.98	1.35	7.19	1.38	7.44	1.40
							14	4.86	1.29	6.49	1.32	6.64	1.35	6.73	1.37	6.82	1.38	7.04	1.41	7.30	1.44
							16	4.86	1.32	6.32	1.36	6.48	1.39	6.57	1.40	6.67	1.41	6.90	1.44	7.16	1.47
							18	4.86	1.36	6.16	1.39	6.32	1.42	6.42	1.43	6.53	1.45	6.76	1.47	7.04	1.50
							20	4.86	1.39	6.00	1.42	6.18	1.45	6.28	1.47	6.39	1.48	6.64	1.51	6.92	1.54
							21	4.86	1.41	5.92	1.44	6.11	1.47	6.21	1.48	6.32	1.50	6.58	1.53	6.86	1.55
							23	4.86	1.45	5.78	1.48	5.97	1.51	6.08	1.52	6.20	1.53	6.46	1.56	6.76	1.59
							25	4.86	1.48	5.64	1.51	5.84	1.54	5.96	1.56	6.08	1.57	6.35	1.60	6.66	1.62
							27	4.86	1.52	5.51	1.55	5.72	1.58	5.84	1.59	5.97	1.61	6.25	1.64	6.57	1.66
							29	4.86	1.56	5.39	1.59	5.61	1.62	5.74	1.63	5.87	1.65	6.16	1.67	6.48	1.70
							31	4.86	1.60	5.28	1.63	5.51	1.66	5.64	1.67	5.77	1.69	6.07	1.71	6.41	1.74
							33	4.86	1.64	5.17	1.67	5.41	1.70	5.54	1.71	5.69	1.73	5.99	1.75	6.34	1.78
							35	4.86	1.68	5.07	1.71	5.32	1.74	5.50	1.75	5.61	1.77	5.92	1.79	6.28	1.82
							37	4.86	1.72	4.98	1.75	5.24	1.78	5.38	1.80	5.53	1.81	5.86	1.84	6.23	1.86
							39	4.86	1.77	4.90	1.80	5.17	1.83	5.31	1.84	5.47	1.85	5.81	1.88	6.18	1.90
							42	4.86	1.83	4.79	1.86	5.07	1.89	5.22	1.91	5.39	1.92	5.74	1.95	6.13	1.97
							44	4.86	1.88	4.72	1.91	5.02	1.94	5.17	1.95	5.34	1.96	5.70	1.99	6.10	2.02
							46	4.86	1.93	4.67	1.96	4.97	1.98	5.13	2.00	5.30	2.01	5.68	2.04	6.08	2.06

12. Capacity Table

12-5. AJ100TXJ5KH/EA

COOLING

Combination (Capacity Index)					Combination (Total)	Combination (%)	Outdoor Temperature (°C,DB)	Indoor Temperature (°C, WB)													
								14		16		18		19		20		22		24	
								TC(kW)	PI(kW)	TC(kW)	PI(kW)	TC(kW)	PI(kW)	TC(kW)	PI(kW)	TC(kW)	PI(kW)	TC(kW)	PI(kW)	TC(kW)	PI(kW)
							10	6.19	1.54	8.73	1.58	8.89	1.62	8.99	1.63	9.10	1.65	9.36	1.69	9.66	1.72
							12	6.19	1.58	8.49	1.62	8.67	1.65	8.77	1.67	8.89	1.69	9.15	1.72	9.47	1.76
							14	6.19	1.62	8.26	1.66	8.45	1.69	8.56	1.71	8.68	1.73	8.96	1.76	9.29	1.80
							16	6.19	1.66	8.04	1.70	8.24	1.73	8.36	1.75	8.49	1.77	8.78	1.80	9.12	1.84
							18	6.19	1.70	7.83	1.74	8.05	1.78	8.17	1.79	8.31	1.81	8.61	1.85	8.96	1.88
							20	6.19	1.74	7.64	1.78	7.86	1.82	7.99	1.84	8.13	1.85	8.45	1.89	8.81	1.92
							21	6.19	1.77	7.54	1.80	7.77	1.84	7.90	1.86	8.05	1.88	8.37	1.91	8.74	1.94
							23	6.19	1.81	7.36	1.85	7.60	1.89	7.74	1.90	7.89	1.92	8.22	1.95	8.60	1.99
							25	6.19	1.86	7.18	1.89	7.44	1.93	7.58	1.95	7.74	1.97	8.08	2.00	8.47	2.03
2000	5000				7000	70%	27	6.19	1.90	7.02	1.94	7.29	1.98	7.44	2.00	7.60	2.01	7.96	2.05	8.36	2.08
							29	6.19	1.95	6.86	1.99	7.14	2.03	7.30	2.04	7.47	2.06	7.84	2.09	8.25	2.13
							31	6.19	2.00	6.72	2.04	7.01	2.08	7.17	2.09	7.35	2.11	7.73	2.14	8.15	2.18
							33	6.19	2.05	6.58	2.09	6.89	2.13	7.06	2.14	7.24	2.16	7.63	2.19	8.07	2.23
							35	6.19	2.11	6.46	2.14	6.77	2.18	7.00	2.19	7.13	2.21	7.54	2.25	7.99	2.28
							37	6.19	2.16	6.34	2.20	6.67	2.23	6.85	2.25	7.04	2.27	7.46	2.30	7.92	2.33
							39	6.19	2.21	6.24	2.25	6.58	2.28	6.76	2.30	6.96	2.32	7.39	2.35	7.87	2.38
							42	6.19	2.30	6.09	2.33	6.45	2.37	6.65	2.39	6.86	2.40	7.30	2.43	7.80	2.47
							44	6.19	2.35	6.01	2.39	6.38	2.43	6.59	2.44	6.80	2.46	7.26	2.49	7.76	2.52
							46	6.19	2.41	5.94	2.45	6.32	2.48	6.53	2.50	6.75	2.52	7.22	2.55	7.74	2.58
							10	7.13	1.79	10.06	1.84	10.25	1.88	10.37	1.90	10.49	1.92	10.79	1.96	11.13	2.00
							12	7.13	1.84	9.79	1.88	9.99	1.93	10.11	1.95	10.25	1.97	10.55	2.01	10.91	2.05
							14	7.13	1.88	9.52	1.93	9.74	1.97	9.87	1.99	10.01	2.01	10.33	2.05	10.71	2.09
							16	7.13	1.93	9.27	1.98	9.50	2.02	9.64	2.04	9.79	2.06	10.12	2.10	10.51	2.14
							18	7.13	1.98	9.03	2.02	9.28	2.07	9.42	2.09	9.58	2.11	9.93	2.15	10.33	2.19
							20	7.13	2.03	8.80	2.07	9.06	2.12	9.21	2.14	9.38	2.16	9.74	2.20	10.15	2.24
							21	7.13	2.06	8.69	2.10	8.96	2.14	9.11	2.16	9.28	2.18	9.65	2.22	10.07	2.26
							23	7.13	2.11	8.48	2.15	8.76	2.19	8.92	2.22	9.09	2.24	9.48	2.28	9.91	2.31
							25	7.13	2.16	8.28	2.21	8.58	2.25	8.74	2.27	8.92	2.29	9.32	2.33	9.77	2.37
2000	6800				8800	88%	27	7.13	2.22	8.09	2.26	8.40	2.30	8.57	2.32	8.76	2.34	9.17	2.38	9.64	2.42
							29	7.13	2.27	7.91	2.32	8.24	2.36	8.42	2.38	8.61	2.40	9.04	2.44	9.51	2.48
							31	7.13	2.33	7.75	2.37	8.08	2.42	8.27	2.44	8.47	2.46	8.91	2.50	9.40	2.53
							33	7.13	2.39	7.59	2.43	7.94	2.48	8.13	2.50	8.34	2.52	8.80	2.55	9.30	2.59
							35	7.13	2.45	7.44	2.49	7.81	2.54	8.07	2.55	8.23	2.58	8.69	2.61	9.21	2.65
							37	7.13	2.51	7.31	2.56	7.69	2.60	7.90	2.62	8.12	2.64	8.60	2.68	9.13	2.71
							39	7.13	2.58	7.19	2.62	7.58	2.66	7.80	2.68	8.03	2.70	8.52	2.74	9.07	2.78
							42	7.13	2.67	7.03	2.72	7.44	2.76	7.67	2.78	7.90	2.80	8.42	2.83	8.99	2.87
							44	7.13	2.74	6.93	2.78	7.36	2.82	7.59	2.84	7.84	2.86	8.37	2.90	8.95	2.94
							46	7.13	2.81	6.85	2.85	7.29	2.89	7.53	2.91	7.78	2.93	8.33	2.97	8.92	3.00

12. Capacity Table

12-5. AJ100TXJ5KH/EA

COOLING

Combination (Capacity Index)					Combination (Total)	Combination (%)	Outdoor Temperature (°C,DB)	Indoor Temperature (°C, WB)													
								14		16		18		19		20		22		24	
								TC(kW)	PI(kW)	TC(kW)	PI(kW)	TC(kW)	PI(kW)	TC(kW)	PI(kW)	TC(kW)	PI(kW)	TC(kW)	PI(kW)	TC(kW)	PI(kW)
2500	2500				5000	50%	10	4.42	1.12	6.23	1.15	6.35	1.18	6.42	1.19	6.50	1.21	6.68	1.23	6.90	1.26
							12	4.42	1.15	6.06	1.18	6.19	1.21	6.27	1.22	6.35	1.23	6.54	1.26	6.76	1.28
							14	4.42	1.18	5.90	1.21	6.04	1.24	6.12	1.25	6.20	1.26	6.40	1.29	6.63	1.31
							16	4.42	1.21	5.75	1.24	5.89	1.27	5.97	1.28	6.06	1.29	6.27	1.32	6.51	1.34
							18	4.42	1.24	5.60	1.27	5.75	1.30	5.84	1.31	5.93	1.32	6.15	1.35	6.40	1.37
							20	4.42	1.27	5.45	1.30	5.62	1.33	5.71	1.34	5.81	1.35	6.03	1.38	6.29	1.40
							21	4.42	1.29	5.39	1.32	5.55	1.34	5.65	1.36	5.75	1.37	5.98	1.40	6.24	1.42
							23	4.42	1.32	5.25	1.35	5.43	1.38	5.53	1.39	5.63	1.40	5.87	1.43	6.14	1.45
							25	4.42	1.36	5.13	1.38	5.31	1.41	5.42	1.42	5.53	1.44	5.77	1.46	6.05	1.49
							27	4.42	1.39	5.01	1.42	5.20	1.45	5.31	1.46	5.43	1.47	5.68	1.50	5.97	1.52
							29	4.42	1.43	4.90	1.45	5.10	1.48	5.21	1.49	5.33	1.51	5.60	1.53	5.89	1.55
							31	4.42	1.46	4.80	1.49	5.01	1.52	5.12	1.53	5.25	1.54	5.52	1.57	5.82	1.59
							33	4.42	1.50	4.70	1.53	4.92	1.55	5.04	1.57	5.17	1.58	5.45	1.60	5.76	1.63
							35	4.42	1.54	4.61	1.57	4.84	1.59	5.00	1.60	5.10	1.62	5.39	1.64	5.71	1.66
							37	4.42	1.58	4.53	1.60	4.76	1.63	4.89	1.64	5.03	1.65	5.33	1.68	5.66	1.70
							39	4.42	1.62	4.45	1.64	4.70	1.67	4.83	1.68	4.97	1.69	5.28	1.72	5.62	1.74
							42	4.42	1.68	4.35	1.70	4.61	1.73	4.75	1.74	4.90	1.75	5.22	1.78	5.57	1.80
							44	4.42	1.72	4.30	1.75	4.56	1.77	4.70	1.78	4.86	1.80	5.18	1.82	5.55	1.84
							46	4.42	1.76	4.24	1.79	4.52	1.81	4.67	1.83	4.82	1.84	5.16	1.86	5.53	1.89
2500	3500				6000	60%	10	5.30	1.29	7.48	1.33	7.62	1.36	7.71	1.37	7.80	1.39	8.02	1.42	8.28	1.45
							12	5.30	1.33	7.28	1.36	7.43	1.39	7.52	1.40	7.62	1.42	7.85	1.45	8.11	1.48
							14	5.30	1.36	7.08	1.39	7.24	1.42	7.34	1.44	7.44	1.45	7.68	1.48	7.96	1.51
							16	5.30	1.39	6.89	1.43	7.07	1.46	7.17	1.47	7.28	1.49	7.53	1.52	7.81	1.54
							18	5.30	1.43	6.72	1.46	6.90	1.49	7.00	1.51	7.12	1.52	7.38	1.55	7.68	1.58
							20	5.30	1.46	6.55	1.50	6.74	1.53	6.85	1.54	6.97	1.56	7.24	1.59	7.55	1.61
							21	5.30	1.48	6.46	1.52	6.66	1.55	6.78	1.56	6.90	1.58	7.17	1.60	7.49	1.63
							23	5.30	1.52	6.31	1.55	6.51	1.58	6.63	1.60	6.76	1.61	7.05	1.64	7.37	1.67
							25	5.30	1.56	6.16	1.59	6.38	1.62	6.50	1.64	6.63	1.65	6.93	1.68	7.26	1.71
							27	5.30	1.60	6.02	1.63	6.25	1.66	6.37	1.68	6.51	1.69	6.82	1.72	7.16	1.75
							29	5.30	1.64	5.88	1.67	6.12	1.70	6.26	1.72	6.40	1.73	6.72	1.76	7.07	1.79
							31	5.30	1.68	5.76	1.71	6.01	1.74	6.15	1.76	6.30	1.77	6.62	1.80	6.99	1.83
							33	5.30	1.72	5.64	1.76	5.90	1.79	6.05	1.80	6.20	1.82	6.54	1.84	6.92	1.87
							35	5.30	1.77	5.54	1.80	5.81	1.83	6.00	1.84	6.12	1.86	6.46	1.89	6.85	1.91
							37	5.30	1.81	5.44	1.84	5.72	1.87	5.87	1.89	6.04	1.90	6.39	1.93	6.79	1.96
							39	5.30	1.86	5.34	1.89	5.64	1.92	5.80	1.93	5.97	1.95	6.34	1.98	6.74	2.00
							42	5.30	1.93	5.22	1.96	5.53	1.99	5.70	2.00	5.88	2.02	6.26	2.05	6.68	2.07
							44	5.30	1.98	5.15	2.01	5.47	2.04	5.64	2.05	5.83	2.07	6.22	2.09	6.65	2.12
							46	5.30	2.03	5.09	2.06	5.42	2.09	5.60	2.10	5.79	2.11	6.19	2.14	6.63	2.17

12. Capacity Table

12-5. AJ100TXJ5KH/EA

COOLING

Combination (Capacity Index)					Combination (Total)	Combination (%)	Outdoor Temperature (°C,DB)	Indoor Temperature (°C, WB)													
								14		16		18		19		20		22		24	
								TC(kW)	PI(kW)	TC(kW)	PI(kW)	TC(kW)	PI(kW)	TC(kW)	PI(kW)	TC(kW)	PI(kW)	TC(kW)	PI(kW)	TC(kW)	PI(kW)
							10	6.63	1.64	9.35	1.69	9.53	1.73	9.63	1.75	9.75	1.76	10.02	1.80	10.34	1.84
							12	6.63	1.69	9.10	1.73	9.29	1.77	9.40	1.79	9.52	1.81	9.81	1.84	10.14	1.88
							14	6.63	1.73	8.85	1.77	9.05	1.81	9.17	1.83	9.30	1.85	9.60	1.88	9.95	1.92
							16	6.63	1.77	8.62	1.81	8.83	1.85	8.96	1.87	9.10	1.89	9.41	1.93	9.77	1.96
							18	6.63	1.82	8.39	1.86	8.62	1.90	8.76	1.92	8.90	1.94	9.22	1.97	9.60	2.01
							20	6.63	1.86	8.18	1.90	8.42	1.94	8.56	1.96	8.71	1.98	9.05	2.02	9.44	2.05
							21	6.63	1.89	8.08	1.93	8.33	1.97	8.47	1.99	8.62	2.00	8.97	2.04	9.36	2.08
							23	6.63	1.93	7.88	1.98	8.14	2.01	8.29	2.03	8.45	2.05	8.81	2.09	9.21	2.12
							25	6.63	1.98	7.70	2.02	7.97	2.06	8.12	2.08	8.29	2.10	8.66	2.14	9.08	2.17
2500	5000				7500	75%	27	6.63	2.03	7.52	2.07	7.81	2.11	7.97	2.13	8.14	2.15	8.52	2.19	8.95	2.22
							29	6.63	2.09	7.35	2.13	7.65	2.17	7.82	2.18	8.00	2.20	8.40	2.24	8.84	2.27
							31	6.63	2.14	7.20	2.18	7.51	2.22	7.69	2.24	7.87	2.25	8.28	2.29	8.74	2.33
							33	6.63	2.19	7.05	2.23	7.38	2.27	7.56	2.29	7.75	2.31	8.17	2.34	8.64	2.38
							35	6.63	2.25	6.92	2.29	7.26	2.33	7.50	2.34	7.64	2.36	8.08	2.40	8.56	2.43
							37	6.63	2.31	6.79	2.35	7.15	2.38	7.34	2.40	7.55	2.42	7.99	2.46	8.49	2.49
							39	6.63	2.36	6.68	2.40	7.05	2.44	7.25	2.46	7.46	2.48	7.92	2.51	8.43	2.55
							42	6.63	2.45	6.53	2.49	6.91	2.53	7.12	2.55	7.35	2.57	7.83	2.60	8.35	2.63
							44	6.63	2.51	6.44	2.55	6.84	2.59	7.06	2.61	7.28	2.63	7.78	2.66	8.32	2.70
							46	6.63	2.58	6.37	2.62	6.78	2.65	7.00	2.67	7.23	2.69	7.74	2.72	8.29	2.76
							10	7.20	1.79	10.16	1.84	10.35	1.88	10.47	1.90	10.60	1.92	10.89	1.96	11.24	2.00
							12	7.20	1.84	9.88	1.88	10.09	1.93	10.21	1.95	10.35	1.97	10.66	2.01	11.02	2.05
							14	7.20	1.88	9.62	1.93	9.84	1.97	9.97	1.99	10.11	2.01	10.44	2.05	10.81	2.09
							16	7.20	1.93	9.36	1.98	9.60	2.02	9.74	2.04	9.89	2.06	10.22	2.10	10.61	2.14
							18	7.20	1.98	9.12	2.02	9.37	2.07	9.51	2.09	9.67	2.11	10.02	2.15	10.43	2.19
							20	7.20	2.03	8.89	2.07	9.15	2.12	9.30	2.14	9.47	2.16	9.83	2.20	10.25	2.24
							21	7.20	2.06	8.78	2.10	9.05	2.14	9.20	2.16	9.37	2.18	9.74	2.22	10.17	2.26
							23	7.20	2.11	8.57	2.15	8.85	2.19	9.01	2.22	9.19	2.24	9.57	2.28	10.01	2.31
							25	7.20	2.16	8.36	2.21	8.66	2.25	8.83	2.27	9.01	2.29	9.41	2.33	9.87	2.37
2500	6800				9300	93%	27	7.20	2.22	8.17	2.26	8.48	2.30	8.66	2.32	8.85	2.34	9.26	2.38	9.73	2.42
							29	7.20	2.27	7.99	2.32	8.32	2.36	8.50	2.38	8.69	2.40	9.12	2.44	9.61	2.48
							31	7.20	2.33	7.82	2.37	8.16	2.42	8.35	2.44	8.55	2.46	9.00	2.50	9.49	2.53
							33	7.20	2.39	7.66	2.43	8.02	2.48	8.22	2.50	8.42	2.52	8.88	2.55	9.39	2.59
							35	7.20	2.45	7.52	2.49	7.89	2.54	8.15	2.55	8.31	2.58	8.78	2.61	9.30	2.65
							37	7.20	2.51	7.38	2.56	7.77	2.60	7.98	2.62	8.20	2.64	8.69	2.68	9.22	2.71
							39	7.20	2.58	7.26	2.62	7.66	2.66	7.87	2.68	8.10	2.70	8.61	2.74	9.16	2.78
							42	7.20	2.67	7.10	2.72	7.51	2.76	7.74	2.78	7.98	2.80	8.50	2.83	9.08	2.87
							44	7.20	2.74	7.00	2.78	7.43	2.82	7.67	2.84	7.92	2.86	8.45	2.90	9.04	2.94
							46	7.20	2.81	6.92	2.85	7.36	2.89	7.60	2.91	7.86	2.93	8.41	2.97	9.01	3.00

12. Capacity Table

12-5. AJ100TXJ5KH/EA

COOLING

Combination (Capacity Index)					Combination (Total)	Combination (%)	Outdoor Temperature (°C,DB)	Indoor Temperature (°C, WB)													
								14		16		18		19		20		22		24	
								TC(kW)	PI(kW)	TC(kW)	PI(kW)	TC(kW)	PI(kW)	TC(kW)	PI(kW)	TC(kW)	PI(kW)	TC(kW)	PI(kW)	TC(kW)	PI(kW)
3500	3500				7000	70%	10	6.19	1.50	8.73	1.53	8.89	1.57	8.99	1.59	9.10	1.61	9.36	1.64	9.66	1.67
							12	6.19	1.53	8.49	1.57	8.67	1.61	8.77	1.63	8.89	1.64	9.15	1.68	9.47	1.71
							14	6.19	1.57	8.26	1.61	8.45	1.65	8.56	1.66	8.68	1.68	8.96	1.72	9.29	1.75
							16	6.19	1.61	8.04	1.65	8.24	1.69	8.36	1.70	8.49	1.72	8.78	1.75	9.12	1.79
							18	6.19	1.65	7.83	1.69	8.05	1.73	8.17	1.74	8.31	1.76	8.61	1.79	8.96	1.83
							20	6.19	1.70	7.64	1.73	7.86	1.77	7.99	1.79	8.13	1.80	8.45	1.84	8.81	1.87
							21	6.19	1.72	7.54	1.75	7.77	1.79	7.90	1.81	8.05	1.82	8.37	1.86	8.74	1.89
							23	6.19	1.76	7.36	1.80	7.60	1.83	7.74	1.85	7.89	1.87	8.22	1.90	8.60	1.93
							25	6.19	1.81	7.18	1.84	7.44	1.88	7.58	1.90	7.74	1.91	8.08	1.95	8.47	1.98
							27	6.19	1.85	7.02	1.89	7.29	1.92	7.44	1.94	7.60	1.96	7.96	1.99	8.36	2.02
							29	6.19	1.90	6.86	1.94	7.14	1.97	7.30	1.99	7.47	2.00	7.84	2.04	8.25	2.07
							31	6.19	1.95	6.72	1.98	7.01	2.02	7.17	2.04	7.35	2.05	7.73	2.09	8.15	2.12
							33	6.19	2.00	6.58	2.03	6.89	2.07	7.06	2.08	7.24	2.10	7.63	2.13	8.07	2.17
							35	6.19	2.05	6.46	2.08	6.77	2.12	7.00	2.13	7.13	2.15	7.54	2.18	7.99	2.22
							37	6.19	2.10	6.34	2.14	6.67	2.17	6.85	2.19	7.04	2.20	7.46	2.24	7.92	2.27
							39	6.19	2.15	6.24	2.19	6.58	2.22	6.76	2.24	6.96	2.26	7.39	2.29	7.87	2.32
							42	6.19	2.23	6.09	2.27	6.45	2.30	6.65	2.32	6.86	2.34	7.30	2.37	7.80	2.40
							44	6.19	2.29	6.01	2.32	6.38	2.36	6.59	2.38	6.80	2.39	7.26	2.42	7.76	2.45
							46	6.19	2.35	5.94	2.38	6.32	2.42	6.53	2.43	6.75	2.45	7.22	2.48	7.74	2.51
3500	5000				8500	85%	10	7.09	1.75	10.00	1.79	10.19	1.84	10.30	1.86	10.43	1.88	10.72	1.92	11.06	1.96
							12	7.09	1.79	9.73	1.84	9.93	1.88	10.05	1.90	10.18	1.92	10.49	1.96	10.85	2.00
							14	7.09	1.84	9.47	1.88	9.68	1.92	9.81	1.95	9.95	1.97	10.27	2.01	10.64	2.04
							16	7.09	1.89	9.22	1.93	9.45	1.97	9.58	1.99	9.73	2.01	10.06	2.05	10.45	2.09
							18	7.09	1.93	8.98	1.98	9.22	2.02	9.36	2.04	9.52	2.06	9.86	2.10	10.26	2.14
							20	7.09	1.98	8.75	2.03	9.01	2.07	9.16	2.09	9.32	2.11	9.68	2.15	10.09	2.18
							21	7.09	2.01	8.64	2.05	8.90	2.09	9.06	2.11	9.22	2.13	9.59	2.17	10.01	2.21
							23	7.09	2.06	8.43	2.10	8.71	2.14	8.87	2.16	9.04	2.18	9.42	2.22	9.85	2.26
							25	7.09	2.11	8.23	2.15	8.52	2.20	8.69	2.22	8.87	2.24	9.26	2.27	9.71	2.31
							27	7.09	2.16	8.04	2.21	8.35	2.25	8.52	2.27	8.71	2.29	9.12	2.33	9.58	2.36
							29	7.09	2.22	7.86	2.26	8.18	2.30	8.36	2.32	8.56	2.34	8.98	2.38	9.45	2.42
							31	7.09	2.28	7.70	2.32	8.03	2.36	8.22	2.38	8.42	2.40	8.85	2.44	9.34	2.47
							33	7.09	2.33	7.54	2.38	7.89	2.42	8.08	2.44	8.29	2.46	8.74	2.49	9.24	2.53
							35	7.09	2.39	7.40	2.44	7.76	2.48	8.02	2.49	8.17	2.52	8.64	2.55	9.15	2.59
							37	7.09	2.45	7.27	2.50	7.64	2.54	7.85	2.56	8.07	2.58	8.55	2.61	9.08	2.65
							39	7.09	2.52	7.14	2.56	7.53	2.60	7.75	2.62	7.98	2.64	8.47	2.67	9.01	2.71
							42	7.09	2.61	6.98	2.65	7.39	2.69	7.62	2.71	7.86	2.73	8.37	2.77	8.93	2.80
							44	7.09	2.68	6.89	2.72	7.31	2.76	7.55	2.78	7.79	2.80	8.32	2.83	8.89	2.87
							46	7.09	2.74	6.81	2.78	7.25	2.82	7.48	2.84	7.73	2.86	8.28	2.90	8.87	2.93

12. Capacity Table

12-5. AJ100TXJ5KH/EA

COOLING

Combination (Capacity Index)					Combination (Total)	Combination (%)	Outdoor Temperature (°C,DB)	Indoor Temperature (°C, WB)													
								14		16		18		19		20		22		24	
								TC(kW)	PI(kW)	TC(kW)	PI(kW)	TC(kW)	PI(kW)	TC(kW)	PI(kW)	TC(kW)	PI(kW)	TC(kW)	PI(kW)	TC(kW)	PI(kW)
							10	7.59	1.90	10.71	1.94	10.91	1.99	11.03	2.01	11.17	2.04	11.48	2.08	11.85	2.12
							12	7.59	1.94	10.42	1.99	10.63	2.04	10.76	2.06	10.91	2.08	11.23	2.13	11.62	2.17
							14	7.59	1.99	10.14	2.04	10.37	2.09	10.51	2.11	10.66	2.13	11.00	2.17	11.40	2.22
							16	7.59	2.04	9.87	2.09	10.12	2.14	10.26	2.16	10.42	2.18	10.78	2.22	11.19	2.27
							18	7.59	2.10	9.61	2.14	9.88	2.19	10.03	2.21	10.19	2.23	10.57	2.28	10.99	2.32
							20	7.59	2.15	9.37	2.20	9.65	2.24	9.81	2.26	9.98	2.29	10.37	2.33	10.81	2.37
							21	7.59	2.18	9.25	2.22	9.54	2.27	9.70	2.29	9.88	2.31	10.27	2.35	10.72	2.40
							23	7.59	2.23	9.03	2.28	9.33	2.32	9.50	2.35	9.68	2.37	10.09	2.41	10.55	2.45
							25	7.59	2.29	8.81	2.34	9.13	2.38	9.31	2.40	9.50	2.42	9.92	2.47	10.40	2.51
3500	6800				10300	103%	27	7.59	2.35	8.61	2.39	8.94	2.44	9.13	2.46	9.32	2.48	9.76	2.52	10.26	2.56
							29	7.59	2.41	8.42	2.45	8.77	2.50	8.96	2.52	9.16	2.54	9.62	2.58	10.13	2.62
							31	7.59	2.47	8.24	2.51	8.60	2.56	8.80	2.58	9.02	2.60	9.48	2.64	10.01	2.68
							33	7.59	2.53	8.08	2.58	8.45	2.62	8.66	2.64	8.88	2.66	9.36	2.71	9.90	2.74
							35	7.59	2.60	7.92	2.64	8.31	2.69	8.59	2.70	8.76	2.73	9.25	2.77	9.81	2.81
							37	7.59	2.66	7.78	2.71	8.19	2.75	8.41	2.77	8.64	2.79	9.16	2.83	9.72	2.87
							39	7.59	2.73	7.65	2.77	8.07	2.82	8.30	2.84	8.54	2.86	9.07	2.90	9.65	2.94
							42	7.59	2.83	7.48	2.88	7.92	2.92	8.16	2.94	8.41	2.96	8.96	3.00	9.57	3.04
							44	7.59	2.90	7.38	2.95	7.83	2.99	8.08	3.01	8.34	3.03	8.91	3.07	9.53	3.11
							46	7.59	2.97	7.29	3.02	7.76	3.06	8.02	3.08	8.28	3.10	8.86	3.14	9.50	3.18
							10	7.56	1.86	10.67	1.91	10.87	1.95	10.99	1.98	11.13	2.00	11.44	2.04	11.81	2.08
							12	7.56	1.91	10.38	1.96	10.60	2.00	10.73	2.02	10.87	2.04	11.19	2.09	11.58	2.13
							14	7.56	1.96	10.10	2.00	10.33	2.05	10.47	2.07	10.62	2.09	10.96	2.13	11.36	2.17
							16	7.56	2.01	9.84	2.05	10.08	2.10	10.23	2.12	10.38	2.14	10.74	2.18	11.15	2.22
							18	7.56	2.06	9.58	2.10	9.84	2.15	9.99	2.17	10.16	2.19	10.53	2.23	10.95	2.27
							20	7.56	2.11	9.34	2.16	9.61	2.20	9.77	2.22	9.94	2.24	10.33	2.28	10.77	2.32
							21	7.56	2.14	9.22	2.18	9.50	2.23	9.67	2.25	9.84	2.27	10.23	2.31	10.68	2.35
							23	7.56	2.19	9.00	2.24	9.29	2.28	9.46	2.30	9.65	2.32	10.05	2.36	10.52	2.40
							25	7.56	2.25	8.78	2.29	9.10	2.34	9.27	2.36	9.46	2.38	9.89	2.42	10.36	2.46
5000	5000				10000	100%	27	7.56	2.30	8.58	2.35	8.91	2.39	9.09	2.41	9.29	2.44	9.73	2.48	10.22	2.52
							29	7.56	2.36	8.39	2.41	8.74	2.45	8.93	2.47	9.13	2.49	9.58	2.53	10.09	2.57
							31	7.56	2.42	8.22	2.47	8.57	2.51	8.77	2.53	8.98	2.55	9.45	2.59	9.97	2.63
							33	7.56	2.48	8.05	2.53	8.42	2.57	8.63	2.59	8.85	2.61	9.33	2.66	9.87	2.69
							35	7.56	2.55	7.90	2.59	8.28	2.64	8.56	2.65	8.72	2.68	9.22	2.72	9.77	2.76
							37	7.56	2.61	7.76	2.66	8.16	2.70	8.38	2.72	8.61	2.74	9.12	2.78	9.69	2.82
							39	7.56	2.68	7.63	2.72	8.04	2.76	8.27	2.79	8.51	2.81	9.04	2.85	9.62	2.88
							42	7.56	2.78	7.45	2.82	7.89	2.87	8.13	2.89	8.38	2.91	8.93	2.95	9.53	2.98
							44	7.56	2.85	7.35	2.89	7.81	2.93	8.05	2.96	8.31	2.98	8.88	3.01	9.49	3.05
							46	7.56	2.92	7.27	2.96	7.73	3.00	7.99	3.03	8.26	3.05	8.83	3.08	9.46	3.12

12. Capacity Table

12-5. AJ100TXJ5KH/EA

COOLING

Combination (Capacity Index)					Combination (Total)	Combination (%)	Outdoor Temperature (°C,DB)	Indoor Temperature (°C, WB)													
								14		16		18		19		20		22		24	
								TC(kW)	PI(kW)	TC(kW)	PI(kW)	TC(kW)	PI(kW)	TC(kW)	PI(kW)	TC(kW)	PI(kW)	TC(kW)	PI(kW)	TC(kW)	PI(kW)
5000	6800				11800	118%	10	7.79	1.94	11.00	1.99	11.20	2.04	11.33	2.06	11.47	2.08	11.79	2.13	12.17	2.17
							12	7.79	1.99	10.70	2.04	10.92	2.08	11.05	2.11	11.20	2.13	11.53	2.17	11.93	2.22
							14	7.79	2.04	10.41	2.09	10.65	2.13	10.79	2.16	10.94	2.18	11.29	2.22	11.70	2.26
							16	7.79	2.09	10.13	2.14	10.39	2.18	10.54	2.21	10.70	2.23	11.06	2.27	11.49	2.32
							18	7.79	2.14	9.87	2.19	10.14	2.24	10.30	2.26	10.47	2.28	10.85	2.33	11.29	2.37
							20	7.79	2.20	9.62	2.25	9.91	2.29	10.07	2.31	10.25	2.34	10.64	2.38	11.10	2.42
							21	7.79	2.22	9.50	2.27	9.79	2.32	9.96	2.34	10.14	2.36	10.55	2.41	11.01	2.45
							23	7.79	2.28	9.27	2.33	9.58	2.38	9.75	2.40	9.94	2.42	10.36	2.46	10.84	2.50
							25	7.79	2.34	9.05	2.39	9.37	2.43	9.55	2.46	9.75	2.48	10.19	2.52	10.68	2.56
							27	7.79	2.40	8.84	2.45	9.18	2.49	9.37	2.52	9.57	2.54	10.02	2.58	10.53	2.62
							29	7.79	2.46	8.65	2.51	9.00	2.55	9.20	2.58	9.41	2.60	9.88	2.64	10.40	2.68
							31	7.79	2.52	8.47	2.57	8.83	2.62	9.04	2.64	9.26	2.66	9.74	2.70	10.27	2.74
							33	7.79	2.59	8.29	2.63	8.68	2.68	8.89	2.70	9.12	2.72	9.61	2.77	10.17	2.81
							35	7.79	2.65	8.14	2.70	8.54	2.74	8.82	2.76	8.99	2.79	9.50	2.83	10.07	2.87
							37	7.79	2.72	7.99	2.77	8.40	2.81	8.63	2.83	8.87	2.85	9.40	2.90	9.98	2.94
							39	7.79	2.79	7.86	2.83	8.29	2.88	8.52	2.90	8.77	2.92	9.31	2.96	9.91	3.00
							42	7.79	2.89	7.68	2.94	8.13	2.98	8.38	3.01	8.64	3.03	9.20	3.07	9.82	3.11
							44	7.79	2.97	7.58	3.01	8.04	3.06	8.30	3.08	8.57	3.10	9.15	3.14	9.78	3.18
							46	7.79	3.04	7.49	3.09	7.97	3.13	8.23	3.15	8.51	3.17	9.10	3.21	9.75	3.25
6800	6800				13600	136%	10	10.23	1.99	10.63	2.03	11.04	2.07	11.25	2.09	11.46	2.11	11.88	2.15	12.30	2.20
							12	10.05	2.04	10.46	2.08	10.87	2.12	11.07	2.15	11.28	2.17	11.70	2.21	12.13	2.25
							14	9.88	2.09	10.28	2.14	10.69	2.18	10.90	2.20	11.11	2.22	11.53	2.26	11.95	2.31
							16	9.70	2.15	10.10	2.19	10.51	2.23	10.72	2.26	10.93	2.28	11.35	2.32	11.78	2.36
							18	9.52	2.20	9.93	2.25	10.34	2.29	10.55	2.31	10.76	2.33	11.18	2.38	11.61	2.42
							20	9.35	2.26	9.75	2.31	10.17	2.35	10.37	2.37	10.58	2.39	11.01	2.44	11.44	2.48
							21	9.26	2.29	9.67	2.33	10.08	2.38	10.29	2.40	10.50	2.42	10.92	2.47	11.35	2.51
							23	9.09	2.35	9.49	2.39	9.91	2.44	10.11	2.46	10.32	2.48	10.75	2.53	11.18	2.57
							25	8.91	2.41	9.32	2.45	9.73	2.50	9.94	2.52	10.15	2.54	10.58	2.59	11.01	2.63
							27	8.74	2.47	9.14	2.51	9.56	2.56	9.77	2.58	9.98	2.60	10.41	2.65	10.84	2.69
							29	8.56	2.53	8.97	2.58	9.39	2.62	9.60	2.64	9.81	2.67	10.24	2.71	10.67	2.76
							31	8.39	2.59	8.80	2.64	9.21	2.68	9.43	2.71	9.64	2.73	10.07	2.77	10.50	2.82
							33	8.22	2.66	8.63	2.70	9.04	2.75	9.25	2.77	9.47	2.79	9.90	2.84	10.33	2.88
							35	8.04	2.72	8.45	2.77	8.87	2.81	9.10	2.83	9.30	2.86	9.73	2.90	10.16	2.95
							37	7.87	2.79	8.28	2.83	8.70	2.88	8.91	2.90	9.13	2.93	9.56	2.97	9.99	3.02
							39	7.70	2.85	8.11	2.90	8.53	2.95	8.74	2.97	8.96	2.99	9.39	3.04	9.83	3.09
							42	7.44	2.96	7.86	3.00	8.28	3.05	8.49	3.07	8.70	3.10	9.14	3.14	9.57	3.19
							44	7.27	3.02	7.69	3.07	8.11	3.12	8.32	3.14	8.54	3.17	8.97	3.21	9.41	3.26
							46	7.10	3.09	7.52	3.14	7.94	3.19	8.15	3.21	8.37	3.24	8.80	3.28	9.24	3.33

12. Capacity Table

12-5. AJ100TXJ5KH/EA

COOLING

Combination (Capacity Index)					Combination (Total)	Combination (%)	Outdoor Temperature (°C,DB)	Indoor Temperature (°C, WB)													
								14		16		18		19		20		22		24	
								TC(kW)	PI(kW)	TC(kW)	PI(kW)	TC(kW)	PI(kW)	TC(kW)	PI(kW)	TC(kW)	PI(kW)	TC(kW)	PI(kW)	TC(kW)	PI(kW)
							10	5.30	1.31	7.48	1.35	7.62	1.38	7.71	1.39	7.80	1.41	8.02	1.44	8.28	1.47
							12	5.30	1.35	7.28	1.38	7.43	1.41	7.52	1.43	7.62	1.44	7.85	1.47	8.11	1.50
							14	5.30	1.38	7.08	1.41	7.24	1.45	7.34	1.46	7.44	1.48	7.68	1.51	7.96	1.53
							16	5.30	1.42	6.89	1.45	7.07	1.48	7.17	1.50	7.28	1.51	7.53	1.54	7.81	1.57
							18	5.30	1.45	6.72	1.48	6.90	1.52	7.00	1.53	7.12	1.55	7.38	1.58	7.68	1.60
							20	5.30	1.49	6.55	1.52	6.74	1.55	6.85	1.57	6.97	1.58	7.24	1.61	7.55	1.64
							21	5.30	1.51	6.46	1.54	6.66	1.57	6.78	1.59	6.90	1.60	7.17	1.63	7.49	1.66
							23	5.30	1.55	6.31	1.58	6.51	1.61	6.63	1.62	6.76	1.64	7.05	1.67	7.37	1.70
							25	5.30	1.59	6.16	1.62	6.38	1.65	6.50	1.66	6.63	1.68	6.93	1.71	7.26	1.74
2000	2000	2000			6000	60%	27	5.30	1.63	6.02	1.66	6.25	1.69	6.37	1.70	6.51	1.72	6.82	1.75	7.16	1.78
							29	5.30	1.67	5.88	1.70	6.12	1.73	6.26	1.75	6.40	1.76	6.72	1.79	7.07	1.82
							31	5.30	1.71	5.76	1.74	6.01	1.77	6.15	1.79	6.30	1.80	6.62	1.83	6.99	1.86
							33	5.30	1.75	5.64	1.78	5.90	1.82	6.05	1.83	6.20	1.85	6.54	1.87	6.92	1.90
							35	5.30	1.80	5.54	1.83	5.81	1.86	6.00	1.87	6.12	1.89	6.46	1.92	6.85	1.94
							37	5.30	1.84	5.44	1.87	5.72	1.90	5.87	1.92	6.04	1.93	6.39	1.96	6.79	1.99
							39	5.30	1.89	5.34	1.92	5.64	1.95	5.80	1.97	5.97	1.98	6.34	2.01	6.74	2.04
							42	5.30	1.96	5.22	1.99	5.53	2.02	5.70	2.04	5.88	2.05	6.26	2.08	6.68	2.11
							44	5.30	2.01	5.15	2.04	5.47	2.07	5.64	2.09	5.83	2.10	6.22	2.13	6.65	2.15
							46	5.30	2.06	5.09	2.09	5.42	2.12	5.60	2.13	5.79	2.15	6.19	2.18	6.63	2.20
							10	5.74	1.41	8.10	1.45	8.26	1.48	8.35	1.50	8.45	1.52	8.69	1.55	8.97	1.58
							12	5.74	1.45	7.88	1.48	8.05	1.52	8.15	1.53	8.25	1.55	8.50	1.58	8.79	1.61
							14	5.74	1.48	7.67	1.52	7.85	1.55	7.95	1.57	8.06	1.59	8.32	1.62	8.62	1.65
							16	5.74	1.52	7.47	1.56	7.66	1.59	7.76	1.61	7.88	1.62	8.15	1.66	8.47	1.69
							18	5.74	1.56	7.28	1.60	7.47	1.63	7.59	1.65	7.71	1.66	7.99	1.69	8.32	1.72
							20	5.74	1.60	7.09	1.64	7.30	1.67	7.42	1.69	7.55	1.70	7.84	1.73	8.18	1.76
							21	5.74	1.62	7.00	1.66	7.22	1.69	7.34	1.71	7.47	1.72	7.77	1.75	8.11	1.78
							23	5.74	1.66	6.83	1.70	7.06	1.73	7.19	1.75	7.33	1.76	7.63	1.79	7.99	1.82
							25	5.74	1.70	6.67	1.74	6.91	1.77	7.04	1.79	7.19	1.80	7.51	1.84	7.87	1.87
2000	2000	2500			6500	65%	27	5.74	1.75	6.52	1.78	6.77	1.82	6.91	1.83	7.06	1.85	7.39	1.88	7.76	1.91
							29	5.74	1.79	6.37	1.83	6.63	1.86	6.78	1.88	6.93	1.89	7.28	1.92	7.66	1.95
							31	5.74	1.84	6.24	1.87	6.51	1.91	6.66	1.92	6.82	1.94	7.18	1.97	7.57	2.00
							33	5.74	1.88	6.11	1.92	6.40	1.95	6.55	1.97	6.72	1.98	7.08	2.01	7.49	2.04
							35	5.74	1.93	6.00	1.97	6.29	2.00	6.50	2.01	6.63	2.03	7.00	2.06	7.42	2.09
							37	5.74	1.98	5.89	2.01	6.19	2.05	6.36	2.06	6.54	2.08	6.93	2.11	7.36	2.14
							39	5.74	2.03	5.79	2.06	6.11	2.10	6.28	2.11	6.46	2.13	6.86	2.16	7.30	2.19
							42	5.74	2.11	5.66	2.14	5.99	2.17	6.17	2.19	6.37	2.20	6.78	2.23	7.24	2.26
							44	5.74	2.16	5.58	2.19	5.93	2.23	6.12	2.24	6.31	2.26	6.74	2.29	7.21	2.32
							46	5.74	2.21	5.52	2.25	5.87	2.28	6.07	2.29	6.27	2.31	6.71	2.34	7.19	2.37

12. Capacity Table

12-5. AJ100TXJ5KH/EA

COOLING

Combination (Capacity Index)					Combination (Total)	Combination (%)	Outdoor Temperature (°C,DB)	Indoor Temperature (°C, WB)													
								14		16		18		19		20		22		24	
								TC(kW)	PI(kW)	TC(kW)	PI(kW)	TC(kW)	PI(kW)	TC(kW)	PI(kW)	TC(kW)	PI(kW)	TC(kW)	PI(kW)	TC(kW)	PI(kW)
2000	2000	3500			7500	75%	10	6.63	1.59	9.35	1.63	9.53	1.67	9.63	1.69	9.75	1.70	10.02	1.74	10.34	1.78
							12	6.63	1.63	9.10	1.67	9.29	1.71	9.40	1.73	9.52	1.74	9.81	1.78	10.14	1.81
							14	6.63	1.67	8.85	1.71	9.05	1.75	9.17	1.77	9.30	1.78	9.60	1.82	9.95	1.85
							16	6.63	1.71	8.62	1.75	8.83	1.79	8.96	1.81	9.10	1.83	9.41	1.86	9.77	1.90
							18	6.63	1.75	8.39	1.79	8.62	1.83	8.76	1.85	8.90	1.87	9.22	1.90	9.60	1.94
							20	6.63	1.80	8.18	1.84	8.42	1.88	8.56	1.90	8.71	1.91	9.05	1.95	9.44	1.98
							21	6.63	1.82	8.08	1.86	8.33	1.90	8.47	1.92	8.62	1.94	8.97	1.97	9.36	2.01
							23	6.63	1.87	7.88	1.91	8.14	1.95	8.29	1.96	8.45	1.98	8.81	2.02	9.21	2.05
							25	6.63	1.92	7.70	1.96	7.97	1.99	8.12	2.01	8.29	2.03	8.66	2.06	9.08	2.10
							27	6.63	1.96	7.52	2.00	7.81	2.04	7.97	2.06	8.14	2.08	8.52	2.11	8.95	2.15
							29	6.63	2.01	7.35	2.05	7.65	2.09	7.82	2.11	8.00	2.13	8.40	2.16	8.84	2.20
							31	6.63	2.07	7.20	2.10	7.51	2.14	7.69	2.16	7.87	2.18	8.28	2.21	8.74	2.25
							33	6.63	2.12	7.05	2.16	7.38	2.19	7.56	2.21	7.75	2.23	8.17	2.26	8.64	2.30
							35	6.63	2.17	6.92	2.21	7.26	2.25	7.50	2.26	7.64	2.28	8.08	2.32	8.56	2.35
							37	6.63	2.23	6.79	2.27	7.15	2.30	7.34	2.32	7.55	2.34	7.99	2.37	8.49	2.40
							39	6.63	2.28	6.68	2.32	7.05	2.36	7.25	2.38	7.46	2.39	7.92	2.43	8.43	2.46
							42	6.63	2.37	6.53	2.41	6.91	2.44	7.12	2.46	7.35	2.48	7.83	2.51	8.35	2.54
							44	6.63	2.43	6.44	2.47	6.84	2.50	7.06	2.52	7.28	2.54	7.78	2.57	8.32	2.60
							46	6.63	2.49	6.37	2.53	6.78	2.56	7.00	2.58	7.23	2.60	7.74	2.63	8.29	2.66
2000	2000	5000			9000	90%	10	7.68	1.83	10.83	1.88	11.04	1.92	11.16	1.95	11.30	1.97	11.61	2.01	11.99	2.05
							12	7.68	1.88	10.54	1.93	10.76	1.97	10.89	1.99	11.03	2.01	11.36	2.06	11.75	2.10
							14	7.68	1.93	10.26	1.97	10.49	2.02	10.63	2.04	10.78	2.06	11.13	2.10	11.53	2.14
							16	7.68	1.98	9.99	2.02	10.24	2.07	10.38	2.09	10.54	2.11	10.90	2.15	11.32	2.19
							18	7.68	2.03	9.73	2.07	9.99	2.12	10.14	2.14	10.31	2.16	10.69	2.20	11.12	2.24
							20	7.68	2.08	9.48	2.12	9.76	2.17	9.92	2.19	10.10	2.21	10.49	2.25	10.93	2.29
							21	7.68	2.10	9.36	2.15	9.65	2.19	9.81	2.21	9.99	2.24	10.39	2.28	10.84	2.32
							23	7.68	2.16	9.13	2.20	9.44	2.25	9.61	2.27	9.79	2.29	10.21	2.33	10.68	2.37
							25	7.68	2.21	8.92	2.26	9.23	2.30	9.41	2.32	9.61	2.34	10.04	2.38	10.52	2.42
							27	7.68	2.27	8.71	2.31	9.05	2.36	9.23	2.38	9.43	2.40	9.88	2.44	10.38	2.48
							29	7.68	2.33	8.52	2.37	8.87	2.41	9.06	2.44	9.27	2.46	9.73	2.50	10.24	2.54
							31	7.68	2.39	8.34	2.43	8.70	2.47	8.91	2.49	9.12	2.52	9.59	2.56	10.12	2.59
							33	7.68	2.45	8.17	2.49	8.55	2.53	8.76	2.55	8.98	2.58	9.47	2.61	10.02	2.65
							35	7.68	2.51	8.02	2.55	8.41	2.60	8.69	2.61	8.86	2.64	9.36	2.68	9.92	2.71
							37	7.68	2.57	7.87	2.62	8.28	2.66	8.51	2.68	8.74	2.70	9.26	2.74	9.84	2.78
							39	7.68	2.64	7.74	2.68	8.16	2.72	8.40	2.74	8.64	2.76	9.18	2.80	9.76	2.84
							42	7.68	2.74	7.57	2.78	8.01	2.82	8.25	2.84	8.51	2.86	9.07	2.90	9.68	2.94
							44	7.68	2.80	7.46	2.85	7.92	2.89	8.18	2.91	8.44	2.93	9.01	2.97	9.64	3.01
							46	7.68	2.87	7.38	2.92	7.85	2.96	8.11	2.98	8.38	3.00	8.97	3.04	9.61	3.08

12. Capacity Table

12-5. AJ100TXJ5KH/EA

COOLING

Combination (Capacity Index)					Combination (Total)	Combination (%)	Outdoor Temperature (°C,DB)	Indoor Temperature (°C, WB)													
								14		16		18		19		20		22		24	
								TC(kW)	PI(kW)	TC(kW)	PI(kW)	TC(kW)	PI(kW)	TC(kW)	PI(kW)	TC(kW)	PI(kW)	TC(kW)	PI(kW)	TC(kW)	PI(kW)
2000	2000	6800			10800	108%	10	7.93	1.88	11.18	1.93	11.39	1.98	11.52	2.00	11.66	2.02	11.99	2.06	12.37	2.10
							12	7.93	1.93	10.88	1.98	11.11	2.02	11.24	2.05	11.39	2.07	11.73	2.11	12.13	2.15
							14	7.93	1.98	10.59	2.03	10.83	2.07	10.97	2.09	11.13	2.12	11.49	2.16	11.90	2.20
							16	7.93	2.03	10.31	2.08	10.56	2.12	10.72	2.14	10.88	2.17	11.25	2.21	11.68	2.25
							18	7.93	2.08	10.04	2.13	10.31	2.17	10.47	2.19	10.64	2.22	11.03	2.26	11.48	2.30
							20	7.93	2.13	9.79	2.18	10.07	2.23	10.24	2.25	10.42	2.27	10.82	2.31	11.29	2.35
							21	7.93	2.16	9.66	2.21	9.96	2.25	10.13	2.27	10.31	2.30	10.73	2.34	11.19	2.38
							23	7.93	2.22	9.43	2.26	9.74	2.31	9.92	2.33	10.11	2.35	10.54	2.39	11.02	2.43
							25	7.93	2.27	9.20	2.32	9.53	2.36	9.72	2.38	9.92	2.41	10.36	2.45	10.86	2.49
							27	7.93	2.33	8.99	2.38	9.34	2.42	9.53	2.44	9.74	2.46	10.19	2.50	10.71	2.54
							29	7.93	2.39	8.80	2.44	9.15	2.48	9.35	2.50	9.57	2.52	10.04	2.56	10.57	2.60
							31	7.93	2.45	8.61	2.50	8.98	2.54	9.19	2.56	9.41	2.58	9.90	2.62	10.45	2.66
							33	7.93	2.51	8.44	2.56	8.83	2.60	9.04	2.62	9.27	2.64	9.78	2.69	10.34	2.72
							35	7.93	2.58	8.28	2.62	8.68	2.67	8.97	2.68	9.14	2.71	9.66	2.75	10.24	2.79
							37	7.93	2.64	8.13	2.69	8.55	2.73	8.78	2.75	9.03	2.77	9.56	2.81	10.15	2.85
							39	7.93	2.71	7.99	2.75	8.43	2.80	8.67	2.82	8.92	2.84	9.47	2.88	10.08	2.92
							42	7.93	2.81	7.81	2.85	8.27	2.90	8.52	2.92	8.79	2.94	9.36	2.98	9.99	3.02
							44	7.93	2.88	7.71	2.92	8.18	2.97	8.44	2.99	8.71	3.01	9.30	3.05	9.95	3.09
							46	7.93	2.95	7.61	3.00	8.10	3.04	8.37	3.06	8.65	3.08	9.26	3.12	9.92	3.16
2000	2500	2500			7000	70%	10	6.19	1.48	8.73	1.52	8.89	1.56	8.99	1.57	9.10	1.59	9.36	1.62	9.66	1.66
							12	6.19	1.52	8.49	1.56	8.67	1.59	8.77	1.61	8.89	1.63	9.15	1.66	9.47	1.69
							14	6.19	1.56	8.26	1.60	8.45	1.63	8.56	1.65	8.68	1.67	8.96	1.70	9.29	1.73
							16	6.19	1.60	8.04	1.63	8.24	1.67	8.36	1.69	8.49	1.70	8.78	1.74	9.12	1.77
							18	6.19	1.64	7.83	1.67	8.05	1.71	8.17	1.73	8.31	1.74	8.61	1.78	8.96	1.81
							20	6.19	1.68	7.64	1.72	7.86	1.75	7.99	1.77	8.13	1.79	8.45	1.82	8.81	1.85
							21	6.19	1.70	7.54	1.74	7.77	1.77	7.90	1.79	8.05	1.81	8.37	1.84	8.74	1.87
							23	6.19	1.74	7.36	1.78	7.60	1.82	7.74	1.83	7.89	1.85	8.22	1.88	8.60	1.91
							25	6.19	1.79	7.18	1.83	7.44	1.86	7.58	1.88	7.74	1.89	8.08	1.93	8.47	1.96
							27	6.19	1.83	7.02	1.87	7.29	1.91	7.44	1.92	7.60	1.94	7.96	1.97	8.36	2.00
							29	6.19	1.88	6.86	1.92	7.14	1.95	7.30	1.97	7.47	1.99	7.84	2.02	8.25	2.05
							31	6.19	1.93	6.72	1.97	7.01	2.00	7.17	2.02	7.35	2.03	7.73	2.07	8.15	2.10
							33	6.19	1.98	6.58	2.01	6.89	2.05	7.06	2.07	7.24	2.08	7.63	2.11	8.07	2.14
							35	6.19	2.03	6.46	2.06	6.77	2.10	7.00	2.11	7.13	2.13	7.54	2.16	7.99	2.19
							37	6.19	2.08	6.34	2.11	6.67	2.15	6.85	2.17	7.04	2.18	7.46	2.21	7.92	2.24
							39	6.19	2.13	6.24	2.17	6.58	2.20	6.76	2.22	6.96	2.23	7.39	2.27	7.87	2.30
							42	6.19	2.21	6.09	2.25	6.45	2.28	6.65	2.30	6.86	2.31	7.30	2.35	7.80	2.38
							44	6.19	2.27	6.01	2.30	6.38	2.34	6.59	2.35	6.80	2.37	7.26	2.40	7.76	2.43
							46	6.19	2.32	5.94	2.36	6.32	2.39	6.53	2.41	6.75	2.42	7.22	2.46	7.74	2.49

12. Capacity Table

12-5. AJ100TXJ5KH/EA

COOLING

Combination (Capacity Index)					Combination (Total)	Combination (%)	Outdoor Temperature (°C,DB)	Indoor Temperature (°C, WB)													
								14		16		18		19		20		22		24	
								TC(kW)	PI(kW)	TC(kW)	PI(kW)	TC(kW)	PI(kW)	TC(kW)	PI(kW)	TC(kW)	PI(kW)	TC(kW)	PI(kW)	TC(kW)	PI(kW)
2000	2500	3500			8000	80%	10	7.07	1.65	9.97	1.69	10.16	1.73	10.28	1.75	10.40	1.77	10.69	1.81	11.03	1.85
							12	7.07	1.69	9.70	1.73	9.90	1.77	10.02	1.79	10.16	1.81	10.46	1.85	10.82	1.89
							14	7.07	1.74	9.44	1.78	9.66	1.82	9.79	1.84	9.93	1.86	10.24	1.89	10.61	1.93
							16	7.07	1.78	9.19	1.82	9.42	1.86	9.56	1.88	9.70	1.90	10.04	1.94	10.42	1.97
							18	7.07	1.82	8.95	1.87	9.20	1.91	9.34	1.92	9.49	1.94	9.84	1.98	10.24	2.02
							20	7.07	1.87	8.73	1.91	8.99	1.95	9.13	1.97	9.29	1.99	9.65	2.03	10.06	2.06
							21	7.07	1.89	8.62	1.94	8.88	1.97	9.03	1.99	9.20	2.01	9.57	2.05	9.98	2.08
							23	7.07	1.94	8.41	1.98	8.69	2.02	8.84	2.04	9.02	2.06	9.40	2.10	9.83	2.13
							25	7.07	1.99	8.21	2.03	8.50	2.07	8.67	2.09	8.84	2.11	9.24	2.15	9.68	2.18
							27	7.07	2.04	8.02	2.08	8.33	2.12	8.50	2.14	8.68	2.16	9.09	2.20	9.55	2.23
							29	7.07	2.10	7.84	2.14	8.16	2.17	8.34	2.19	8.53	2.21	8.96	2.25	9.43	2.28
							31	7.07	2.15	7.68	2.19	8.01	2.23	8.20	2.25	8.40	2.26	8.83	2.30	9.32	2.34
							33	7.07	2.20	7.52	2.24	7.87	2.28	8.06	2.30	8.27	2.32	8.72	2.35	9.22	2.39
							35	7.07	2.26	7.38	2.30	7.74	2.34	8.00	2.35	8.15	2.37	8.62	2.41	9.13	2.44
							37	7.07	2.32	7.25	2.36	7.62	2.39	7.83	2.41	8.05	2.43	8.53	2.47	9.05	2.50
							39	7.07	2.37	7.13	2.41	7.52	2.45	7.73	2.47	7.96	2.49	8.45	2.52	8.99	2.56
							42	7.07	2.46	6.97	2.50	7.38	2.54	7.60	2.56	7.84	2.58	8.35	2.61	8.91	2.65
							44	7.07	2.53	6.87	2.56	7.30	2.60	7.53	2.62	7.77	2.64	8.30	2.67	8.87	2.71
							46	7.07	2.59	6.79	2.63	7.23	2.66	7.46	2.68	7.72	2.70	8.25	2.74	8.85	2.77
2000	2500	5000			9500	95%	10	7.76	1.83	10.95	1.88	11.15	1.92	11.28	1.95	11.42	1.97	11.73	2.01	12.11	2.05
							12	7.76	1.88	10.65	1.93	10.87	1.97	11.00	1.99	11.15	2.01	11.48	2.06	11.87	2.10
							14	7.76	1.93	10.36	1.97	10.60	2.02	10.74	2.04	10.89	2.06	11.24	2.10	11.65	2.14
							16	7.76	1.98	10.09	2.02	10.34	2.07	10.49	2.09	10.65	2.11	11.01	2.15	11.44	2.19
							18	7.76	2.03	9.83	2.07	10.10	2.12	10.25	2.14	10.42	2.16	10.80	2.20	11.23	2.24
							20	7.76	2.08	9.58	2.12	9.86	2.17	10.02	2.19	10.20	2.21	10.60	2.25	11.05	2.29
							21	7.76	2.10	9.46	2.15	9.75	2.19	9.92	2.21	10.10	2.24	10.50	2.28	10.96	2.32
							23	7.76	2.16	9.23	2.20	9.53	2.25	9.71	2.27	9.90	2.29	10.31	2.33	10.79	2.37
							25	7.76	2.21	9.01	2.26	9.33	2.30	9.51	2.32	9.71	2.34	10.14	2.38	10.63	2.42
							27	7.76	2.27	8.80	2.31	9.14	2.36	9.33	2.38	9.53	2.40	9.98	2.44	10.48	2.48
							29	7.76	2.33	8.61	2.37	8.96	2.41	9.16	2.44	9.37	2.46	9.83	2.50	10.35	2.54
							31	7.76	2.39	8.43	2.43	8.79	2.47	9.00	2.49	9.22	2.52	9.69	2.56	10.23	2.59
							33	7.76	2.45	8.26	2.49	8.64	2.53	8.85	2.55	9.08	2.58	9.57	2.61	10.12	2.65
							35	7.76	2.51	8.10	2.55	8.50	2.60	8.78	2.61	8.95	2.64	9.46	2.68	10.02	2.71
							37	7.76	2.57	7.95	2.62	8.37	2.66	8.59	2.68	8.83	2.70	9.36	2.74	9.94	2.78
							39	7.76	2.64	7.82	2.68	8.25	2.72	8.48	2.74	8.73	2.76	9.27	2.80	9.87	2.84
							42	7.76	2.74	7.64	2.78	8.09	2.82	8.34	2.84	8.60	2.86	9.16	2.90	9.78	2.94
							44	7.76	2.80	7.54	2.85	8.01	2.89	8.26	2.91	8.53	2.93	9.10	2.97	9.74	3.01
							46	7.76	2.87	7.45	2.92	7.93	2.96	8.19	2.98	8.47	3.00	9.06	3.04	9.71	3.08

12. Capacity Table

12-5. AJ100TXJ5KH/EA

COOLING

Combination (Capacity Index)					Combination (Total)	Combination (%)	Outdoor Temperature (°C,DB)	Indoor Temperature (°C, WB)													
								14		16		18		19		20		22		24	
								TC(kW)	PI(kW)	TC(kW)	PI(kW)	TC(kW)	PI(kW)	TC(kW)	PI(kW)	TC(kW)	PI(kW)	TC(kW)	PI(kW)	TC(kW)	PI(kW)
2000	2500	6800			11300	113%	10	7.74	1.88	10.92	1.93	11.13	1.98	11.25	2.00	11.39	2.02	11.71	2.06	12.08	2.10
							12	7.74	1.93	10.62	1.98	10.85	2.02	10.98	2.05	11.12	2.07	11.46	2.11	11.85	2.15
							14	7.74	1.98	10.34	2.03	10.58	2.07	10.71	2.09	10.87	2.12	11.22	2.16	11.62	2.20
							16	7.74	2.03	10.07	2.08	10.32	2.12	10.46	2.14	10.63	2.17	10.99	2.21	11.41	2.25
							18	7.74	2.08	9.80	2.13	10.07	2.17	10.23	2.19	10.40	2.22	10.77	2.26	11.21	2.30
							20	7.74	2.13	9.56	2.18	9.84	2.23	10.00	2.25	10.18	2.27	10.57	2.31	11.02	2.35
							21	7.74	2.16	9.44	2.21	9.73	2.25	9.89	2.27	10.07	2.30	10.47	2.34	10.93	2.38
							23	7.74	2.22	9.21	2.26	9.51	2.31	9.69	2.33	9.87	2.35	10.29	2.39	10.76	2.43
							25	7.74	2.27	8.99	2.32	9.31	2.36	9.49	2.38	9.68	2.41	10.12	2.45	10.60	2.49
							27	7.74	2.33	8.78	2.38	9.12	2.42	9.31	2.44	9.51	2.46	9.96	2.50	10.46	2.54
							29	7.74	2.39	8.59	2.44	8.94	2.48	9.14	2.50	9.35	2.52	9.81	2.56	10.33	2.60
							31	7.74	2.45	8.41	2.50	8.77	2.54	8.98	2.56	9.19	2.58	9.67	2.62	10.20	2.66
							33	7.74	2.51	8.24	2.56	8.62	2.60	8.83	2.62	9.06	2.64	9.55	2.69	10.10	2.72
							35	7.74	2.58	8.08	2.62	8.48	2.67	8.76	2.68	8.93	2.71	9.44	2.75	10.00	2.79
							37	7.74	2.64	7.94	2.69	8.35	2.73	8.57	2.75	8.81	2.77	9.34	2.81	9.92	2.85
							39	7.74	2.71	7.80	2.75	8.23	2.80	8.46	2.82	8.71	2.84	9.25	2.88	9.84	2.92
							42	7.74	2.81	7.63	2.85	8.08	2.90	8.32	2.92	8.58	2.94	9.14	2.98	9.76	3.02
							44	7.74	2.88	7.53	2.92	7.99	2.97	8.24	2.99	8.51	3.01	9.08	3.05	9.72	3.09
							46	7.74	2.95	7.43	3.00	7.91	3.04	8.17	3.06	8.45	3.08	9.04	3.12	9.69	3.16
2000	3500	3500			9000	90%	10	7.68	1.83	10.83	1.87	11.04	1.92	11.16	1.94	11.30	1.96	11.61	2.00	11.99	2.04
							12	7.68	1.87	10.54	1.92	10.76	1.96	10.89	1.98	11.03	2.01	11.36	2.05	11.75	2.09
							14	7.68	1.92	10.26	1.97	10.49	2.01	10.63	2.03	10.78	2.05	11.13	2.09	11.53	2.13
							16	7.68	1.97	9.99	2.01	10.24	2.06	10.38	2.08	10.54	2.10	10.90	2.14	11.32	2.18
							18	7.68	2.02	9.73	2.06	9.99	2.11	10.14	2.13	10.31	2.15	10.69	2.19	11.12	2.23
							20	7.68	2.07	9.48	2.12	9.76	2.16	9.92	2.18	10.10	2.20	10.49	2.24	10.93	2.28
							21	7.68	2.10	9.36	2.14	9.65	2.18	9.81	2.21	9.99	2.23	10.39	2.27	10.84	2.31
							23	7.68	2.15	9.13	2.19	9.44	2.24	9.61	2.26	9.79	2.28	10.21	2.32	10.68	2.36
							25	7.68	2.20	8.92	2.25	9.23	2.29	9.41	2.31	9.61	2.33	10.04	2.37	10.52	2.41
							27	7.68	2.26	8.71	2.31	9.05	2.35	9.23	2.37	9.43	2.39	9.88	2.43	10.38	2.47
							29	7.68	2.32	8.52	2.36	8.87	2.41	9.06	2.43	9.27	2.45	9.73	2.49	10.24	2.53
							31	7.68	2.38	8.34	2.42	8.70	2.46	8.91	2.49	9.12	2.51	9.59	2.55	10.12	2.58
							33	7.68	2.44	8.17	2.48	8.55	2.52	8.76	2.55	8.98	2.57	9.47	2.60	10.02	2.64
							35	7.68	2.50	8.02	2.54	8.41	2.59	8.69	2.60	8.86	2.63	9.36	2.67	9.92	2.70
							37	7.68	2.56	7.87	2.61	8.28	2.65	8.51	2.67	8.74	2.69	9.26	2.73	9.84	2.77
							39	7.68	2.63	7.74	2.67	8.16	2.71	8.40	2.73	8.64	2.75	9.18	2.79	9.76	2.83
							42	7.68	2.73	7.57	2.77	8.01	2.81	8.25	2.83	8.51	2.85	9.07	2.89	9.68	2.93
							44	7.68	2.79	7.46	2.84	7.92	2.88	8.18	2.90	8.44	2.92	9.01	2.96	9.64	2.99
							46	7.68	2.86	7.38	2.91	7.85	2.95	8.11	2.97	8.38	2.99	8.97	3.03	9.61	3.06

12. Capacity Table

12-5. AJ100TXJ5KH/EA

COOLING

Combination (Capacity Index)					Combination (Total)	Combination (%)	Outdoor Temperature (°C,DB)	Indoor Temperature (°C, WB)													
								14		16		18		19		20		22		24	
								TC(kW)	PI(kW)	TC(kW)	PI(kW)	TC(kW)	PI(kW)	TC(kW)	PI(kW)	TC(kW)	PI(kW)	TC(kW)	PI(kW)	TC(kW)	PI(kW)
2000	3500	5000			10500	105%	10	7.89	1.87	11.13	1.92	11.34	1.96	11.47	1.98	11.61	2.01	11.94	2.05	12.32	2.09
							12	7.89	1.92	10.83	1.96	11.06	2.01	11.19	2.03	11.34	2.05	11.68	2.09	12.08	2.14
							14	7.89	1.96	10.54	2.01	10.78	2.06	10.92	2.08	11.08	2.10	11.43	2.14	11.85	2.18
							16	7.89	2.01	10.26	2.06	10.52	2.11	10.67	2.13	10.83	2.15	11.20	2.19	11.63	2.23
							18	7.89	2.06	10.00	2.11	10.27	2.16	10.43	2.18	10.60	2.20	10.98	2.24	11.43	2.28
							20	7.89	2.12	9.74	2.16	10.03	2.21	10.19	2.23	10.37	2.25	10.78	2.29	11.23	2.33
							21	7.89	2.14	9.62	2.19	9.92	2.24	10.08	2.26	10.27	2.28	10.68	2.32	11.14	2.36
							23	7.89	2.20	9.39	2.25	9.70	2.29	9.87	2.31	10.06	2.33	10.49	2.37	10.97	2.41
							25	7.89	2.26	9.16	2.30	9.49	2.35	9.67	2.37	9.87	2.39	10.31	2.43	10.81	2.47
							27	7.89	2.31	8.95	2.36	9.29	2.40	9.49	2.42	9.69	2.45	10.15	2.49	10.66	2.53
							29	7.89	2.37	8.76	2.42	9.11	2.46	9.31	2.48	9.53	2.50	10.00	2.54	10.53	2.58
							31	7.89	2.43	8.57	2.48	8.94	2.52	9.15	2.54	9.37	2.56	9.86	2.60	10.40	2.64
							33	7.89	2.49	8.40	2.54	8.79	2.58	9.00	2.60	9.23	2.62	9.73	2.67	10.29	2.70
							35	7.89	2.56	8.24	2.60	8.64	2.65	8.93	2.66	9.10	2.69	9.62	2.73	10.19	2.77
							37	7.89	2.62	8.09	2.67	8.51	2.71	8.74	2.73	8.98	2.75	9.52	2.79	10.11	2.83
							39	7.89	2.69	7.96	2.73	8.39	2.78	8.63	2.80	8.88	2.82	9.43	2.86	10.03	2.89
							42	7.89	2.79	7.78	2.83	8.23	2.88	8.48	2.90	8.75	2.92	9.32	2.96	9.95	3.00
							44	7.89	2.86	7.67	2.90	8.14	2.95	8.40	2.97	8.67	2.99	9.26	3.03	9.90	3.06
							46	7.89	2.93	7.58	2.97	8.07	3.02	8.33	3.04	8.61	3.06	9.21	3.10	9.87	3.13
2000	3500	6800			12300	123%	10	7.92	1.92	11.17	1.97	11.38	2.01	11.51	2.04	11.65	2.06	11.98	2.10	12.36	2.14
							12	7.92	1.97	10.87	2.01	11.09	2.06	11.23	2.08	11.38	2.11	11.72	2.15	12.12	2.19
							14	7.92	2.02	10.57	2.06	10.82	2.11	10.96	2.13	11.12	2.16	11.47	2.20	11.89	2.24
							16	7.92	2.07	10.30	2.11	10.55	2.16	10.70	2.18	10.87	2.21	11.24	2.25	11.67	2.29
							18	7.92	2.12	10.03	2.17	10.30	2.21	10.46	2.24	10.63	2.26	11.02	2.30	11.46	2.34
							20	7.92	2.17	9.77	2.22	10.06	2.27	10.23	2.29	10.41	2.31	10.81	2.35	11.27	2.39
							21	7.92	2.20	9.65	2.25	9.95	2.29	10.12	2.32	10.30	2.34	10.71	2.38	11.18	2.42
							23	7.92	2.26	9.42	2.30	9.73	2.35	9.91	2.37	10.10	2.39	10.52	2.44	11.01	2.48
							25	7.92	2.31	9.19	2.36	9.52	2.41	9.71	2.43	9.91	2.45	10.35	2.49	10.85	2.53
							27	7.92	2.37	8.98	2.42	9.33	2.47	9.52	2.49	9.73	2.51	10.18	2.55	10.70	2.59
							29	7.92	2.43	8.79	2.48	9.14	2.53	9.34	2.55	9.56	2.57	10.03	2.61	10.56	2.65
							31	7.92	2.50	8.60	2.54	8.97	2.59	9.18	2.61	9.40	2.63	9.89	2.67	10.44	2.71
							33	7.92	2.56	8.43	2.61	8.82	2.65	9.03	2.67	9.26	2.69	9.77	2.74	10.33	2.78
							35	7.92	2.62	8.27	2.67	8.67	2.71	8.96	2.73	9.13	2.76	9.65	2.80	10.23	2.84
							37	7.92	2.69	8.12	2.74	8.54	2.78	8.77	2.80	9.02	2.82	9.55	2.86	10.14	2.90
							39	7.92	2.76	7.98	2.80	8.42	2.85	8.66	2.87	8.91	2.89	9.46	2.93	10.07	2.97
							42	7.92	2.86	7.80	2.91	8.26	2.95	8.51	2.97	8.78	2.99	9.35	3.04	9.98	3.07
							44	7.92	2.93	7.70	2.98	8.17	3.02	8.43	3.04	8.70	3.07	9.29	3.11	9.94	3.14
							46	7.92	3.01	7.60	3.05	8.09	3.10	8.36	3.12	8.64	3.14	9.25	3.18	9.91	3.22

12. Capacity Table

12-5. AJ100TXJ5KH/EA

COOLING

Combination (Capacity Index)					Combination (Total)	Combination (%)	Outdoor Temperature (°C,DB)	Indoor Temperature (°C, WB)													
								14		16		18		19		20		22		24	
								TC(kW)	PI(kW)	TC(kW)	PI(kW)	TC(kW)	PI(kW)	TC(kW)	PI(kW)	TC(kW)	PI(kW)	TC(kW)	PI(kW)	TC(kW)	PI(kW)
2000	5000	5000			12000	120%	10	7.87	1.91	11.09	1.96	11.30	2.01	11.43	2.03	11.57	2.05	11.90	2.09	12.28	2.14
							12	7.87	1.96	10.79	2.01	11.02	2.05	11.15	2.08	11.30	2.10	11.64	2.14	12.04	2.18
							14	7.87	2.01	10.50	2.06	10.74	2.10	10.89	2.13	11.04	2.15	11.40	2.19	11.81	2.23
							16	7.87	2.06	10.23	2.11	10.48	2.15	10.63	2.18	10.80	2.20	11.17	2.24	11.59	2.28
							18	7.87	2.11	9.96	2.16	10.23	2.21	10.39	2.23	10.56	2.25	10.95	2.29	11.39	2.33
							20	7.87	2.17	9.71	2.21	10.00	2.26	10.16	2.28	10.34	2.30	10.74	2.35	11.20	2.39
							21	7.87	2.19	9.59	2.24	9.88	2.29	10.05	2.31	10.23	2.33	10.64	2.37	11.11	2.41
							23	7.87	2.25	9.35	2.30	9.66	2.34	9.84	2.36	10.03	2.39	10.45	2.43	10.93	2.47
							25	7.87	2.31	9.13	2.35	9.46	2.40	9.64	2.42	9.84	2.44	10.28	2.48	10.77	2.52
							27	7.87	2.36	8.92	2.41	9.26	2.46	9.46	2.48	9.66	2.50	10.12	2.54	10.63	2.58
							29	7.87	2.43	8.73	2.47	9.08	2.52	9.28	2.54	9.50	2.56	9.96	2.60	10.49	2.64
							31	7.87	2.49	8.54	2.53	8.91	2.58	9.12	2.60	9.34	2.62	9.83	2.66	10.37	2.70
							33	7.87	2.55	8.37	2.60	8.76	2.64	8.97	2.66	9.20	2.68	9.70	2.73	10.26	2.76
							35	7.87	2.61	8.21	2.66	8.61	2.71	8.90	2.72	9.07	2.75	9.59	2.79	10.16	2.83
							37	7.87	2.68	8.06	2.73	8.48	2.77	8.71	2.79	8.95	2.81	9.49	2.85	10.07	2.89
							39	7.87	2.75	7.93	2.79	8.36	2.84	8.60	2.86	8.85	2.88	9.40	2.92	10.00	2.96
							42	7.87	2.85	7.75	2.90	8.20	2.94	8.45	2.96	8.72	2.98	9.29	3.02	9.91	3.06
							44	7.87	2.92	7.65	2.97	8.12	3.01	8.37	3.03	8.64	3.05	9.23	3.09	9.87	3.13
							46	7.87	3.00	7.55	3.04	8.04	3.08	8.30	3.11	8.58	3.13	9.18	3.17	9.84	3.20
2000	5000	6800			13800	138%	10	10.41	1.99	10.82	2.04	11.24	2.08	11.45	2.10	11.66	2.12	12.08	2.16	12.52	2.21
							12	10.23	2.05	10.64	2.09	11.06	2.13	11.27	2.15	11.48	2.17	11.91	2.22	12.34	2.26
							14	10.05	2.10	10.46	2.14	10.88	2.19	11.09	2.21	11.30	2.23	11.73	2.27	12.16	2.32
							16	9.87	2.16	10.28	2.20	10.70	2.24	10.91	2.26	11.12	2.29	11.55	2.33	11.99	2.37
							18	9.69	2.21	10.10	2.26	10.52	2.30	10.73	2.32	10.95	2.34	11.38	2.39	11.81	2.43
							20	9.51	2.27	9.93	2.31	10.34	2.36	10.56	2.38	10.77	2.40	11.20	2.45	11.64	2.49
							21	9.42	2.30	9.84	2.34	10.26	2.39	10.47	2.41	10.68	2.43	11.11	2.47	11.55	2.52
							23	9.24	2.36	9.66	2.40	10.08	2.45	10.29	2.47	10.51	2.49	10.94	2.53	11.38	2.58
							25	9.07	2.42	9.48	2.46	9.90	2.51	10.12	2.53	10.33	2.55	10.76	2.60	11.20	2.64
							27	8.89	2.48	9.31	2.52	9.73	2.57	9.94	2.59	10.16	2.61	10.59	2.66	11.03	2.70
							29	8.71	2.54	9.13	2.58	9.55	2.63	9.77	2.65	9.98	2.68	10.42	2.72	10.86	2.77
							31	8.54	2.60	8.95	2.65	9.38	2.69	9.59	2.72	9.81	2.74	10.24	2.78	10.68	2.83
							33	8.36	2.67	8.78	2.71	9.20	2.76	9.42	2.78	9.63	2.80	10.07	2.85	10.51	2.89
							35	8.18	2.73	8.60	2.78	9.03	2.82	9.26	2.84	9.46	2.87	9.90	2.92	10.34	2.96
							37	8.01	2.80	8.43	2.84	8.85	2.89	9.07	2.91	9.29	2.94	9.72	2.98	10.17	3.03
							39	7.84	2.86	8.26	2.91	8.68	2.96	8.90	2.98	9.11	3.00	9.55	3.05	10.00	3.10
							42	7.57	2.97	8.00	3.01	8.42	3.06	8.64	3.08	8.86	3.11	9.30	3.15	9.74	3.20
							44	7.40	3.03	7.82	3.08	8.25	3.13	8.47	3.15	8.69	3.18	9.13	3.22	9.57	3.27
							46	7.23	3.11	7.65	3.15	8.08	3.20	8.30	3.22	8.52	3.25	8.96	3.30	9.40	3.34

12. Capacity Table

12-5. AJ100TXJ5KH/EA

COOLING

Combination (Capacity Index)					Combination (Total)	Combination (%)	Outdoor Temperature (°C,DB)	Indoor Temperature (°C, WB)													
								14		16		18		19		20		22		24	
								TC(kW)	PI(kW)	TC(kW)	PI(kW)	TC(kW)	PI(kW)	TC(kW)	PI(kW)	TC(kW)	PI(kW)	TC(kW)	PI(kW)	TC(kW)	PI(kW)
							10	11.02	2.01	11.45	2.05	11.89	2.09	12.11	2.11	12.34	2.14	12.79	2.18	13.25	2.22
							12	10.83	2.06	11.26	2.10	11.70	2.15	11.92	2.17	12.15	2.19	12.60	2.23	13.06	2.28
							14	10.64	2.12	11.07	2.16	11.51	2.20	11.74	2.22	11.96	2.25	12.41	2.29	12.87	2.33
							16	10.45	2.17	10.88	2.21	11.32	2.26	11.55	2.28	11.77	2.30	12.23	2.35	12.69	2.39
							18	10.26	2.23	10.69	2.27	11.14	2.32	11.36	2.34	11.58	2.36	12.04	2.40	12.50	2.45
							20	10.07	2.29	10.50	2.33	10.95	2.37	11.17	2.40	11.40	2.42	11.85	2.46	12.32	2.51
							21	9.97	2.31	10.41	2.36	10.85	2.40	11.08	2.43	11.30	2.45	11.76	2.49	12.22	2.54
							23	9.78	2.37	10.22	2.42	10.67	2.46	10.89	2.49	11.12	2.51	11.58	2.55	12.04	2.60
							25	9.60	2.43	10.03	2.48	10.48	2.52	10.71	2.55	10.93	2.57	11.39	2.61	11.86	2.66
2000	6800	6800			15600	156%	27	9.41	2.50	9.85	2.54	10.29	2.59	10.52	2.61	10.75	2.63	11.21	2.68	11.67	2.72
							29	9.22	2.56	9.66	2.60	10.11	2.65	10.33	2.67	10.56	2.69	11.02	2.74	11.49	2.79
							31	9.03	2.62	9.48	2.67	9.92	2.71	10.15	2.74	10.38	2.76	10.84	2.80	11.31	2.85
							33	8.85	2.69	9.29	2.73	9.74	2.78	9.97	2.80	10.19	2.82	10.66	2.87	11.12	2.92
							35	8.66	2.75	9.11	2.80	9.55	2.84	9.80	2.86	10.01	2.89	10.47	2.94	10.94	2.98
							37	8.48	2.82	8.92	2.86	9.37	2.91	9.60	2.93	9.83	2.96	10.29	3.00	10.76	3.05
							39	8.29	2.88	8.74	2.93	9.19	2.98	9.42	3.00	9.65	3.02	10.11	3.07	10.58	3.12
							42	8.02	2.99	8.46	3.03	8.91	3.08	9.14	3.10	9.37	3.13	9.84	3.18	10.31	3.22
							44	7.83	3.06	8.28	3.10	8.73	3.15	8.96	3.18	9.19	3.20	9.66	3.25	10.13	3.29
							46	7.65	3.13	8.10	3.17	8.55	3.22	8.78	3.25	9.01	3.27	9.48	3.32	9.95	3.37
							10	6.63	1.58	9.35	1.62	9.53	1.66	9.63	1.68	9.75	1.70	10.02	1.73	10.34	1.77
							12	6.63	1.62	9.10	1.66	9.29	1.70	9.40	1.72	9.52	1.74	9.81	1.77	10.14	1.81
							14	6.63	1.66	8.85	1.70	9.05	1.74	9.17	1.76	9.30	1.78	9.60	1.81	9.95	1.85
							16	6.63	1.70	8.62	1.74	8.83	1.78	8.96	1.80	9.10	1.82	9.41	1.85	9.77	1.89
							18	6.63	1.75	8.39	1.79	8.62	1.82	8.76	1.84	8.90	1.86	9.22	1.90	9.60	1.93
							20	6.63	1.79	8.18	1.83	8.42	1.87	8.56	1.89	8.71	1.90	9.05	1.94	9.44	1.97
							21	6.63	1.81	8.08	1.85	8.33	1.89	8.47	1.91	8.62	1.93	8.97	1.96	9.36	2.00
							23	6.63	1.86	7.88	1.90	8.14	1.94	8.29	1.96	8.45	1.97	8.81	2.01	9.21	2.04
							25	6.63	1.91	7.70	1.95	7.97	1.98	8.12	2.00	8.29	2.02	8.66	2.05	9.08	2.09
2500	2500	2500			7500	75%	27	6.63	1.96	7.52	1.99	7.81	2.03	7.97	2.05	8.14	2.07	8.52	2.10	8.95	2.14
							29	6.63	2.01	7.35	2.04	7.65	2.08	7.82	2.10	8.00	2.12	8.40	2.15	8.84	2.19
							31	6.63	2.06	7.20	2.10	7.51	2.13	7.69	2.15	7.87	2.17	8.28	2.20	8.74	2.24
							33	6.63	2.11	7.05	2.15	7.38	2.18	7.56	2.20	7.75	2.22	8.17	2.25	8.64	2.29
							35	6.63	2.16	6.92	2.20	7.26	2.24	7.50	2.25	7.64	2.27	8.08	2.31	8.56	2.34
							37	6.63	2.22	6.79	2.26	7.15	2.29	7.34	2.31	7.55	2.33	7.99	2.36	8.49	2.39
							39	6.63	2.27	6.68	2.31	7.05	2.35	7.25	2.37	7.46	2.38	7.92	2.42	8.43	2.45
							42	6.63	2.36	6.53	2.40	6.91	2.43	7.12	2.45	7.35	2.47	7.83	2.50	8.35	2.53
							44	6.63	2.42	6.44	2.46	6.84	2.49	7.06	2.51	7.28	2.53	7.78	2.56	8.32	2.59
							46	6.63	2.48	6.37	2.52	6.78	2.55	7.00	2.57	7.23	2.59	7.74	2.62	8.29	2.65

12. Capacity Table

12-5. AJ100TXJ5KH/EA

COOLING

Combination (Capacity Index)					Combination (Total)	Combination (%)	Outdoor Temperature (°C,DB)	Indoor Temperature (°C, WB)													
								14		16		18		19		20		22		24	
								TC(kW)	PI(kW)	TC(kW)	PI(kW)	TC(kW)	PI(kW)	TC(kW)	PI(kW)	TC(kW)	PI(kW)	TC(kW)	PI(kW)	TC(kW)	PI(kW)
2500	2500	3500			8500	85%	10	7.51	1.76	10.60	1.80	10.80	1.84	10.92	1.86	11.05	1.89	11.36	1.93	11.72	1.96
							12	7.51	1.80	10.31	1.84	10.52	1.89	10.65	1.91	10.79	1.93	11.12	1.97	11.49	2.01
							14	7.51	1.85	10.03	1.89	10.26	1.93	10.40	1.95	10.55	1.97	10.88	2.01	11.28	2.05
							16	7.51	1.89	9.77	1.94	10.01	1.98	10.15	2.00	10.31	2.02	10.66	2.06	11.07	2.10
							18	7.51	1.94	9.51	1.98	9.77	2.03	9.92	2.05	10.09	2.07	10.45	2.11	10.88	2.14
							20	7.51	1.99	9.27	2.03	9.55	2.08	9.70	2.10	9.87	2.12	10.26	2.16	10.69	2.19
							21	7.51	2.02	9.16	2.06	9.44	2.10	9.60	2.12	9.77	2.14	10.16	2.18	10.61	2.22
							23	7.51	2.07	8.93	2.11	9.23	2.15	9.40	2.17	9.58	2.19	9.98	2.23	10.44	2.27
							25	7.51	2.12	8.72	2.16	9.03	2.20	9.21	2.22	9.40	2.24	9.82	2.28	10.29	2.32
							27	7.51	2.17	8.52	2.22	8.85	2.26	9.03	2.28	9.23	2.30	9.66	2.34	10.15	2.37
							29	7.51	2.23	8.33	2.27	8.67	2.31	8.86	2.33	9.07	2.35	9.52	2.39	10.02	2.43
							31	7.51	2.29	8.16	2.33	8.51	2.37	8.71	2.39	8.92	2.41	9.38	2.45	9.90	2.48
							33	7.51	2.34	7.99	2.39	8.36	2.43	8.57	2.45	8.79	2.47	9.26	2.50	9.80	2.54
							35	7.51	2.40	7.84	2.45	8.23	2.49	8.50	2.50	8.66	2.53	9.16	2.56	9.70	2.60
							37	7.51	2.46	7.70	2.51	8.10	2.55	8.32	2.57	8.55	2.59	9.06	2.62	9.62	2.66
							39	7.51	2.53	7.57	2.57	7.99	2.61	8.21	2.63	8.45	2.65	8.97	2.68	9.55	2.72
							42	7.51	2.62	7.40	2.66	7.84	2.70	8.07	2.72	8.33	2.74	8.87	2.78	9.47	2.82
							44	7.51	2.69	7.30	2.73	7.75	2.77	8.00	2.79	8.26	2.81	8.81	2.84	9.43	2.88
							46	7.51	2.75	7.21	2.79	7.68	2.83	7.93	2.85	8.20	2.87	8.77	2.91	9.40	2.95
2500	2500	5000			10000	100%	10	7.82	1.83	11.03	1.88	11.24	1.92	11.37	1.95	11.51	1.97	11.83	2.01	12.21	2.05
							12	7.82	1.88	10.73	1.93	10.96	1.97	11.09	1.99	11.24	2.01	11.57	2.06	11.97	2.10
							14	7.82	1.93	10.44	1.97	10.68	2.02	10.82	2.04	10.98	2.06	11.33	2.10	11.74	2.14
							16	7.82	1.98	10.17	2.02	10.42	2.07	10.57	2.09	10.73	2.11	11.10	2.15	11.53	2.19
							18	7.82	2.03	9.91	2.07	10.18	2.12	10.33	2.14	10.50	2.16	10.88	2.20	11.32	2.24
							20	7.82	2.08	9.65	2.12	9.94	2.17	10.10	2.19	10.28	2.21	10.68	2.25	11.13	2.29
							21	7.82	2.10	9.53	2.15	9.83	2.19	9.99	2.21	10.18	2.24	10.58	2.28	11.04	2.32
							23	7.82	2.16	9.30	2.20	9.61	2.25	9.78	2.27	9.97	2.29	10.39	2.33	10.87	2.37
							25	7.82	2.21	9.08	2.26	9.40	2.30	9.59	2.32	9.78	2.34	10.22	2.38	10.71	2.42
							27	7.82	2.27	8.87	2.31	9.21	2.36	9.40	2.38	9.61	2.40	10.06	2.44	10.57	2.48
							29	7.82	2.33	8.68	2.37	9.03	2.41	9.23	2.44	9.44	2.46	9.91	2.50	10.43	2.54
							31	7.82	2.39	8.49	2.43	8.86	2.47	9.07	2.49	9.29	2.52	9.77	2.56	10.31	2.59
							33	7.82	2.45	8.32	2.49	8.71	2.53	8.92	2.55	9.15	2.58	9.65	2.61	10.20	2.65
							35	7.82	2.51	8.16	2.55	8.56	2.60	8.85	2.61	9.02	2.64	9.53	2.68	10.10	2.71
							37	7.82	2.57	8.02	2.62	8.43	2.66	8.66	2.68	8.90	2.70	9.43	2.74	10.02	2.78
							39	7.82	2.64	7.88	2.68	8.31	2.72	8.55	2.74	8.80	2.76	9.34	2.80	9.94	2.84
							42	7.82	2.74	7.71	2.78	8.16	2.82	8.41	2.84	8.67	2.86	9.23	2.90	9.86	2.94
							44	7.82	2.80	7.60	2.85	8.07	2.89	8.33	2.91	8.60	2.93	9.18	2.97	9.82	3.01
							46	7.82	2.87	7.51	2.92	8.00	2.96	8.26	2.98	8.54	3.00	9.13	3.04	9.79	3.08

12. Capacity Table

12-5. AJ100TXJ5KH/EA

COOLING

Combination (Capacity Index)					Combination (Total)	Combination (%)	Outdoor Temperature (°C,DB)	Indoor Temperature (°C, WB)													
								14		16		18		19		20		22		24	
								TC(kW)	PI(kW)	TC(kW)	PI(kW)	TC(kW)	PI(kW)	TC(kW)	PI(kW)	TC(kW)	PI(kW)	TC(kW)	PI(kW)	TC(kW)	PI(kW)
2500	2500	6800			11800	118%	10	7.84	1.91	11.06	1.96	11.27	2.01	11.39	2.03	11.53	2.05	11.86	2.09	12.23	2.14
							12	7.84	1.96	10.76	2.01	10.98	2.05	11.11	2.08	11.26	2.10	11.60	2.14	11.99	2.18
							14	7.84	2.01	10.47	2.06	10.71	2.10	10.85	2.13	11.00	2.15	11.36	2.19	11.77	2.23
							16	7.84	2.06	10.19	2.11	10.45	2.15	10.60	2.18	10.76	2.20	11.13	2.24	11.55	2.28
							18	7.84	2.11	9.93	2.16	10.20	2.21	10.36	2.23	10.53	2.25	10.91	2.29	11.35	2.33
							20	7.84	2.17	9.68	2.21	9.96	2.26	10.13	2.28	10.30	2.30	10.70	2.35	11.16	2.39
							21	7.84	2.19	9.56	2.24	9.85	2.29	10.02	2.31	10.20	2.33	10.61	2.37	11.07	2.41
							23	7.84	2.25	9.32	2.30	9.63	2.34	9.81	2.36	10.00	2.39	10.42	2.43	10.90	2.47
							25	7.84	2.31	9.10	2.35	9.43	2.40	9.61	2.42	9.81	2.44	10.24	2.48	10.74	2.52
							27	7.84	2.36	8.89	2.41	9.23	2.46	9.42	2.48	9.63	2.50	10.08	2.54	10.59	2.58
							29	7.84	2.43	8.70	2.47	9.05	2.52	9.25	2.54	9.46	2.56	9.93	2.60	10.46	2.64
							31	7.84	2.49	8.51	2.53	8.88	2.58	9.09	2.60	9.31	2.62	9.79	2.66	10.33	2.70
							33	7.84	2.55	8.34	2.60	8.73	2.64	8.94	2.66	9.17	2.68	9.67	2.73	10.22	2.76
							35	7.84	2.61	8.18	2.66	8.58	2.71	8.87	2.72	9.04	2.75	9.55	2.79	10.13	2.83
							37	7.84	2.68	8.04	2.73	8.45	2.77	8.68	2.79	8.92	2.81	9.45	2.85	10.04	2.89
							39	7.84	2.75	7.90	2.79	8.33	2.84	8.57	2.86	8.82	2.88	9.37	2.92	9.97	2.96
							42	7.84	2.85	7.72	2.90	8.18	2.94	8.43	2.96	8.69	2.98	9.26	3.02	9.88	3.06
							44	7.84	2.92	7.62	2.97	8.09	3.01	8.35	3.03	8.62	3.05	9.20	3.09	9.84	3.13
							46	7.84	3.00	7.53	3.04	8.01	3.08	8.28	3.11	8.55	3.13	9.15	3.17	9.81	3.20
2500	3500	3500			9500	95%	10	7.75	1.83	10.93	1.87	11.14	1.92	11.26	1.94	11.40	1.96	11.72	2.00	12.10	2.04
							12	7.75	1.87	10.64	1.92	10.86	1.96	10.99	1.98	11.14	2.01	11.47	2.05	11.86	2.09
							14	7.75	1.92	10.35	1.97	10.59	2.01	10.73	2.03	10.88	2.05	11.23	2.09	11.63	2.13
							16	7.75	1.97	10.08	2.01	10.33	2.06	10.48	2.08	10.64	2.10	11.00	2.14	11.42	2.18
							18	7.75	2.02	9.82	2.06	10.08	2.11	10.24	2.13	10.41	2.15	10.79	2.19	11.22	2.23
							20	7.75	2.07	9.57	2.12	9.85	2.16	10.01	2.18	10.19	2.20	10.58	2.24	11.03	2.28
							21	7.75	2.10	9.45	2.14	9.74	2.18	9.90	2.21	10.08	2.23	10.49	2.27	10.94	2.31
							23	7.75	2.15	9.22	2.19	9.52	2.24	9.70	2.26	9.88	2.28	10.30	2.32	10.77	2.36
							25	7.75	2.20	9.00	2.25	9.32	2.29	9.50	2.31	9.70	2.33	10.13	2.37	10.62	2.41
							27	7.75	2.26	8.79	2.31	9.13	2.35	9.32	2.37	9.52	2.39	9.97	2.43	10.47	2.47
							29	7.75	2.32	8.60	2.36	8.95	2.41	9.15	2.43	9.36	2.45	9.82	2.49	10.34	2.53
							31	7.75	2.38	8.42	2.42	8.78	2.46	8.99	2.49	9.20	2.51	9.68	2.55	10.22	2.58
							33	7.75	2.44	8.25	2.48	8.63	2.52	8.84	2.55	9.07	2.57	9.56	2.60	10.11	2.64
							35	7.75	2.50	8.09	2.54	8.49	2.59	8.77	2.60	8.94	2.63	9.45	2.67	10.01	2.70
							37	7.75	2.56	7.95	2.61	8.36	2.65	8.58	2.67	8.82	2.69	9.35	2.73	9.93	2.77
							39	7.75	2.63	7.81	2.67	8.24	2.71	8.47	2.73	8.72	2.75	9.26	2.79	9.85	2.83
							42	7.75	2.73	7.64	2.77	8.09	2.81	8.33	2.83	8.59	2.85	9.15	2.89	9.77	2.93
							44	7.75	2.79	7.53	2.84	8.00	2.88	8.25	2.90	8.52	2.92	9.09	2.96	9.73	2.99
							46	7.75	2.86	7.44	2.91	7.92	2.95	8.18	2.97	8.46	2.99	9.05	3.03	9.70	3.06

12. Capacity Table

12-5. AJ100TXJ5KH/EA

COOLING

Combination (Capacity Index)					Combination (Total)	Combination (%)	Outdoor Temperature (°C,DB)	Indoor Temperature (°C, WB)													
								14		16		18		19		20		22		24	
								TC(kW)	PI(kW)	TC(kW)	PI(kW)	TC(kW)	PI(kW)	TC(kW)	PI(kW)	TC(kW)	PI(kW)	TC(kW)	PI(kW)	TC(kW)	PI(kW)
2500	3500	5000			11000	110%	10	7.69	1.87	10.85	1.92	11.05	1.96	11.17	1.98	11.31	2.01	11.63	2.05	12.00	2.09
							12	7.69	1.92	10.55	1.96	10.77	2.01	10.90	2.03	11.05	2.05	11.38	2.09	11.76	2.14
							14	7.69	1.96	10.27	2.01	10.50	2.06	10.64	2.08	10.79	2.10	11.14	2.14	11.54	2.18
							16	7.69	2.01	10.00	2.06	10.25	2.11	10.39	2.13	10.55	2.15	10.91	2.19	11.33	2.23
							18	7.69	2.06	9.74	2.11	10.00	2.16	10.16	2.18	10.32	2.20	10.70	2.24	11.13	2.28
							20	7.69	2.12	9.49	2.16	9.77	2.21	9.93	2.23	10.11	2.25	10.50	2.29	10.95	2.33
							21	7.69	2.14	9.37	2.19	9.66	2.24	9.82	2.26	10.00	2.28	10.40	2.32	10.86	2.36
							23	7.69	2.20	9.14	2.25	9.45	2.29	9.62	2.31	9.80	2.33	10.22	2.37	10.69	2.41
							25	7.69	2.26	8.93	2.30	9.24	2.35	9.42	2.37	9.62	2.39	10.05	2.43	10.53	2.47
							27	7.69	2.31	8.72	2.36	9.06	2.40	9.24	2.42	9.44	2.45	9.89	2.49	10.39	2.53
							29	7.69	2.37	8.53	2.42	8.88	2.46	9.07	2.48	9.28	2.50	9.74	2.54	10.26	2.58
							31	7.69	2.43	8.35	2.48	8.71	2.52	8.92	2.54	9.13	2.56	9.61	2.60	10.14	2.64
							33	7.69	2.49	8.18	2.54	8.56	2.58	8.77	2.60	8.99	2.62	9.48	2.67	10.03	2.70
							35	7.69	2.56	8.03	2.60	8.42	2.65	8.70	2.66	8.87	2.69	9.37	2.73	9.93	2.77
							37	7.69	2.62	7.88	2.67	8.29	2.71	8.51	2.73	8.75	2.75	9.27	2.79	9.85	2.83
							39	7.69	2.69	7.75	2.73	8.17	2.78	8.41	2.80	8.65	2.82	9.19	2.86	9.78	2.89
							42	7.69	2.79	7.58	2.83	8.02	2.88	8.26	2.90	8.52	2.92	9.08	2.96	9.69	3.00
							44	7.69	2.86	7.47	2.90	7.93	2.95	8.19	2.97	8.45	2.99	9.02	3.03	9.65	3.06
							46	7.69	2.93	7.38	2.97	7.86	3.02	8.12	3.04	8.39	3.06	8.98	3.10	9.62	3.13
2500	3500	6800			12800	128%	10	8.01	1.95	11.29	2.00	11.51	2.05	11.64	2.07	11.78	2.10	12.11	2.14	12.50	2.18
							12	8.01	2.00	10.99	2.05	11.22	2.10	11.35	2.12	11.50	2.14	11.85	2.19	12.25	2.23
							14	8.01	2.05	10.69	2.10	10.94	2.15	11.08	2.17	11.24	2.19	11.60	2.24	12.02	2.28
							16	8.01	2.10	10.41	2.15	10.67	2.20	10.82	2.22	10.99	2.25	11.37	2.29	11.80	2.33
							18	8.01	2.16	10.14	2.21	10.42	2.25	10.58	2.28	10.75	2.30	11.14	2.34	11.59	2.38
							20	8.01	2.21	9.88	2.26	10.18	2.31	10.34	2.33	10.53	2.35	10.93	2.40	11.40	2.44
							21	8.01	2.24	9.76	2.29	10.06	2.34	10.23	2.36	10.42	2.38	10.83	2.42	11.31	2.47
							23	8.01	2.30	9.52	2.35	9.84	2.39	10.02	2.42	10.21	2.44	10.64	2.48	11.13	2.52
							25	8.01	2.36	9.30	2.40	9.63	2.45	9.81	2.47	10.02	2.50	10.46	2.54	10.97	2.58
							27	8.01	2.42	9.08	2.46	9.43	2.51	9.63	2.53	9.83	2.56	10.30	2.60	10.82	2.64
							29	8.01	2.48	8.88	2.53	9.25	2.57	9.45	2.59	9.67	2.62	10.14	2.66	10.68	2.70
							31	8.01	2.54	8.70	2.59	9.07	2.63	9.28	2.66	9.51	2.68	10.00	2.72	10.55	2.76
							33	8.01	2.61	8.52	2.65	8.91	2.70	9.13	2.72	9.37	2.74	9.87	2.79	10.44	2.83
							35	8.01	2.67	8.36	2.72	8.77	2.76	9.06	2.78	9.23	2.81	9.76	2.85	10.34	2.89
							37	8.01	2.74	8.21	2.79	8.63	2.83	8.87	2.85	9.12	2.88	9.66	2.92	10.25	2.96
							39	8.01	2.81	8.07	2.86	8.51	2.90	8.75	2.92	9.01	2.94	9.57	2.99	10.18	3.03
							42	8.01	2.91	7.89	2.96	8.35	3.01	8.61	3.03	8.87	3.05	9.45	3.09	10.09	3.13
							44	8.01	2.99	7.78	3.03	8.26	3.08	8.52	3.10	8.80	3.12	9.39	3.16	10.05	3.20
							46	8.01	3.06	7.69	3.11	8.18	3.15	8.45	3.17	8.74	3.19	9.35	3.24	10.02	3.28

12. Capacity Table

12-5. AJ100TXJ5KH/EA

COOLING

Combination (Capacity Index)					Combination (Total)	Combination (%)	Outdoor Temperature (°C,DB)	Indoor Temperature (°C, WB)													
								14		16		18		19		20		22		24	
								TC(kW)	PI(kW)	TC(kW)	PI(kW)	TC(kW)	PI(kW)	TC(kW)	PI(kW)	TC(kW)	PI(kW)	TC(kW)	PI(kW)	TC(kW)	PI(kW)
2500	5000	5000			12500	125%	10	7.95	1.95	11.22	2.00	11.43	2.04	11.56	2.07	11.70	2.09	12.03	2.13	12.41	2.18
							12	7.95	1.99	10.91	2.04	11.14	2.09	11.28	2.11	11.43	2.14	11.77	2.18	12.17	2.22
							14	7.95	2.05	10.62	2.09	10.86	2.14	11.01	2.16	11.17	2.19	11.52	2.23	11.94	2.27
							16	7.95	2.10	10.34	2.15	10.60	2.19	10.75	2.22	10.92	2.24	11.29	2.28	11.72	2.32
							18	7.95	2.15	10.07	2.20	10.35	2.25	10.51	2.27	10.68	2.29	11.07	2.33	11.52	2.38
							20	7.95	2.21	9.82	2.25	10.11	2.30	10.27	2.32	10.46	2.34	10.86	2.39	11.32	2.43
							21	7.95	2.23	9.70	2.28	9.99	2.33	10.16	2.35	10.35	2.37	10.76	2.42	11.23	2.46
							23	7.95	2.29	9.46	2.34	9.77	2.38	9.95	2.41	10.14	2.43	10.57	2.47	11.06	2.51
							25	7.95	2.35	9.23	2.40	9.56	2.44	9.75	2.46	9.95	2.49	10.39	2.53	10.89	2.57
							27	7.95	2.41	9.02	2.46	9.37	2.50	9.56	2.52	9.77	2.55	10.23	2.59	10.75	2.63
							29	7.95	2.47	8.82	2.52	9.18	2.56	9.39	2.59	9.60	2.61	10.08	2.65	10.61	2.69
							31	7.95	2.53	8.64	2.58	9.01	2.63	9.22	2.65	9.45	2.67	9.94	2.71	10.48	2.75
							33	7.95	2.60	8.46	2.64	8.86	2.69	9.07	2.71	9.30	2.73	9.81	2.78	10.37	2.82
							35	7.95	2.66	8.30	2.71	8.71	2.75	9.00	2.77	9.17	2.80	9.69	2.84	10.27	2.88
							37	7.95	2.73	8.15	2.78	8.58	2.82	8.81	2.84	9.06	2.87	9.59	2.91	10.19	2.95
							39	7.95	2.80	8.02	2.85	8.46	2.89	8.70	2.91	8.95	2.93	9.50	2.97	10.11	3.01
							42	7.95	2.90	7.84	2.95	8.30	3.00	8.55	3.02	8.82	3.04	9.39	3.08	10.02	3.12
							44	7.95	2.98	7.73	3.02	8.21	3.07	8.47	3.09	8.74	3.11	9.33	3.15	9.98	3.19
							46	7.95	3.05	7.64	3.10	8.13	3.14	8.40	3.16	8.68	3.18	9.29	3.22	9.95	3.26
2500	5000	6800			14300	143%	10	10.52	1.92	10.94	1.96	11.36	2.00	11.57	2.02	11.78	2.05	12.22	2.09	12.65	2.13
							12	10.34	1.97	10.76	2.02	11.18	2.06	11.39	2.08	11.60	2.10	12.04	2.14	12.47	2.18
							14	10.16	2.03	10.57	2.07	11.00	2.11	11.21	2.13	11.42	2.15	11.86	2.19	12.30	2.23
							16	9.98	2.08	10.39	2.12	10.82	2.16	11.03	2.18	11.24	2.21	11.68	2.25	12.12	2.29
							18	9.80	2.13	10.21	2.18	10.64	2.22	10.85	2.24	11.06	2.26	11.50	2.30	11.94	2.34
							20	9.62	2.19	10.03	2.23	10.46	2.27	10.67	2.30	10.89	2.32	11.32	2.36	11.76	2.40
							21	9.52	2.22	9.94	2.26	10.37	2.30	10.58	2.32	10.80	2.34	11.23	2.39	11.68	2.43
							23	9.34	2.27	9.76	2.32	10.19	2.36	10.40	2.38	10.62	2.40	11.06	2.45	11.50	2.49
							25	9.17	2.33	9.58	2.37	10.01	2.42	10.23	2.44	10.44	2.46	10.88	2.50	11.32	2.55
							27	8.99	2.39	9.41	2.43	9.83	2.48	10.05	2.50	10.26	2.52	10.70	2.56	11.15	2.61
							29	8.81	2.45	9.23	2.49	9.65	2.54	9.87	2.56	10.09	2.58	10.53	2.62	10.97	2.67
							31	8.63	2.51	9.05	2.55	9.48	2.60	9.69	2.62	9.91	2.64	10.35	2.69	10.80	2.73
							33	8.45	2.57	8.87	2.62	9.30	2.66	9.52	2.68	9.74	2.70	10.18	2.75	10.63	2.79
							35	8.27	2.63	8.70	2.68	9.13	2.72	9.36	2.74	9.56	2.77	10.00	2.81	10.45	2.86
							37	8.10	2.70	8.52	2.74	8.95	2.79	9.17	2.81	9.39	2.83	9.83	2.88	10.28	2.92
							39	7.92	2.76	8.34	2.81	8.78	2.85	8.99	2.88	9.21	2.90	9.66	2.94	10.11	2.99
							42	7.66	2.86	8.08	2.91	8.51	2.95	8.73	2.97	8.95	3.00	9.40	3.04	9.85	3.09
							44	7.48	2.93	7.91	2.97	8.34	3.02	8.56	3.04	8.78	3.06	9.23	3.11	9.68	3.16
							46	7.31	3.00	7.73	3.04	8.17	3.09	8.39	3.11	8.61	3.13	9.05	3.18	9.51	3.23

12. Capacity Table

12-5. AJ100TXJ5KH/EA

COOLING

Combination (Capacity Index)					Combination (Total)	Combination (%)	Outdoor Temperature (°C,DB)	Indoor Temperature (°C, WB)													
								14		16		18		19		20		22		24	
								TC(kW)	PI(kW)	TC(kW)	PI(kW)	TC(kW)	PI(kW)	TC(kW)	PI(kW)	TC(kW)	PI(kW)	TC(kW)	PI(kW)	TC(kW)	PI(kW)
2500	6800	6800			16100	161%	10	11.02	2.01	11.45	2.05	11.89	2.09	12.11	2.11	12.34	2.14	12.79	2.18	13.25	2.22
							12	10.83	2.06	11.26	2.10	11.70	2.15	11.92	2.17	12.15	2.19	12.60	2.23	13.06	2.28
							14	10.64	2.12	11.07	2.16	11.51	2.20	11.74	2.22	11.96	2.25	12.41	2.29	12.87	2.33
							16	10.45	2.17	10.88	2.21	11.32	2.26	11.55	2.28	11.77	2.30	12.23	2.35	12.69	2.39
							18	10.26	2.23	10.69	2.27	11.14	2.32	11.36	2.34	11.58	2.36	12.04	2.40	12.50	2.45
							20	10.07	2.29	10.50	2.33	10.95	2.37	11.17	2.40	11.40	2.42	11.85	2.46	12.32	2.51
							21	9.97	2.31	10.41	2.36	10.85	2.40	11.08	2.43	11.30	2.45	11.76	2.49	12.22	2.54
							23	9.78	2.37	10.22	2.42	10.67	2.46	10.89	2.49	11.12	2.51	11.58	2.55	12.04	2.60
							25	9.60	2.43	10.03	2.48	10.48	2.52	10.71	2.55	10.93	2.57	11.39	2.61	11.86	2.66
							27	9.41	2.50	9.85	2.54	10.29	2.59	10.52	2.61	10.75	2.63	11.21	2.68	11.67	2.72
							29	9.22	2.56	9.66	2.60	10.11	2.65	10.33	2.67	10.56	2.69	11.02	2.74	11.49	2.79
							31	9.03	2.62	9.48	2.67	9.92	2.71	10.15	2.74	10.38	2.76	10.84	2.80	11.31	2.85
							33	8.85	2.69	9.29	2.73	9.74	2.78	9.97	2.80	10.19	2.82	10.66	2.87	11.12	2.92
							35	8.66	2.75	9.11	2.80	9.55	2.84	9.80	2.86	10.01	2.89	10.47	2.94	10.94	2.98
							37	8.48	2.82	8.92	2.86	9.37	2.91	9.60	2.93	9.83	2.96	10.29	3.00	10.76	3.05
							39	8.29	2.88	8.74	2.93	9.19	2.98	9.42	3.00	9.65	3.02	10.11	3.07	10.58	3.12
							42	8.02	2.99	8.46	3.03	8.91	3.08	9.14	3.10	9.37	3.13	9.84	3.18	10.31	3.22
							44	7.83	3.06	8.28	3.10	8.73	3.15	8.96	3.18	9.19	3.20	9.66	3.25	10.13	3.29
							46	7.65	3.13	8.10	3.17	8.55	3.22	8.78	3.25	9.01	3.27	9.48	3.32	9.95	3.37
3500	3500	3500			10500	105%	10	7.90	1.86	11.14	1.91	11.36	1.95	11.48	1.98	11.62	2.00	11.95	2.04	12.33	2.08
							12	7.90	1.91	10.84	1.96	11.07	2.00	11.20	2.02	11.35	2.04	11.69	2.09	12.09	2.13
							14	7.90	1.96	10.55	2.00	10.79	2.05	10.93	2.07	11.09	2.09	11.45	2.13	11.86	2.17
							16	7.90	2.01	10.27	2.05	10.53	2.10	10.68	2.12	10.84	2.14	11.22	2.18	11.64	2.22
							18	7.90	2.06	10.01	2.10	10.28	2.15	10.44	2.17	10.61	2.19	11.00	2.23	11.44	2.27
							20	7.90	2.11	9.75	2.16	10.04	2.20	10.21	2.22	10.39	2.24	10.79	2.28	11.25	2.32
							21	7.90	2.14	9.63	2.18	9.93	2.23	10.10	2.25	10.28	2.27	10.69	2.31	11.16	2.35
							23	7.90	2.19	9.40	2.24	9.71	2.28	9.88	2.30	10.08	2.32	10.50	2.36	10.98	2.40
							25	7.90	2.25	9.17	2.29	9.50	2.34	9.68	2.36	9.88	2.38	10.32	2.42	10.82	2.46
							27	7.90	2.30	8.96	2.35	9.31	2.39	9.50	2.41	9.70	2.44	10.16	2.48	10.67	2.52
							29	7.90	2.36	8.77	2.41	9.12	2.45	9.32	2.47	9.54	2.49	10.01	2.53	10.54	2.57
							31	7.90	2.42	8.58	2.47	8.95	2.51	9.16	2.53	9.38	2.55	9.87	2.59	10.41	2.63
							33	7.90	2.48	8.41	2.53	8.80	2.57	9.01	2.59	9.24	2.61	9.74	2.66	10.30	2.69
							35	7.90	2.55	8.25	2.59	8.65	2.64	8.94	2.65	9.11	2.68	9.63	2.72	10.20	2.76
							37	7.90	2.61	8.10	2.66	8.52	2.70	8.75	2.72	8.99	2.74	9.53	2.78	10.12	2.82
							39	7.90	2.68	7.96	2.72	8.40	2.76	8.64	2.79	8.89	2.81	9.44	2.85	10.05	2.88
							42	7.90	2.78	7.78	2.82	8.24	2.87	8.49	2.89	8.76	2.91	9.33	2.95	9.96	2.98
							44	7.90	2.85	7.68	2.89	8.15	2.93	8.41	2.96	8.68	2.98	9.27	3.01	9.91	3.05
							46	7.90	2.92	7.59	2.96	8.08	3.00	8.34	3.03	8.62	3.05	9.22	3.08	9.88	3.12

12. Capacity Table

12-5. AJ100TXJ5KH/EA

COOLING

Combination (Capacity Index)					Combination (Total)	Combination (%)	Outdoor Temperature (°C,DB)	Indoor Temperature (°C, WB)													
								14		16		18		19		20		22		24	
								TC(kW)	PI(kW)	TC(kW)	PI(kW)	TC(kW)	PI(kW)	TC(kW)	PI(kW)	TC(kW)	PI(kW)	TC(kW)	PI(kW)	TC(kW)	PI(kW)
3500	3500	5000			12000	120%	10	7.87	1.90	11.11	1.95	11.32	2.00	11.44	2.02	11.58	2.04	11.91	2.09	12.29	2.13
							12	7.87	1.95	10.81	2.00	11.03	2.05	11.16	2.07	11.31	2.09	11.65	2.13	12.05	2.18
							14	7.87	2.00	10.52	2.05	10.76	2.09	10.90	2.12	11.05	2.14	11.41	2.18	11.82	2.22
							16	7.87	2.05	10.24	2.10	10.49	2.15	10.64	2.17	10.81	2.19	11.18	2.23	11.60	2.27
							18	7.87	2.10	9.97	2.15	10.24	2.20	10.40	2.22	10.57	2.24	10.96	2.28	11.40	2.32
							20	7.87	2.16	9.72	2.20	10.01	2.25	10.17	2.27	10.35	2.29	10.75	2.34	11.21	2.38
							21	7.87	2.18	9.60	2.23	9.89	2.28	10.06	2.30	10.24	2.32	10.65	2.36	11.12	2.40
							23	7.87	2.24	9.36	2.29	9.67	2.33	9.85	2.35	10.04	2.38	10.47	2.42	10.95	2.46
							25	7.87	2.30	9.14	2.34	9.47	2.39	9.65	2.41	9.85	2.43	10.29	2.47	10.79	2.52
							27	7.87	2.36	8.93	2.40	9.27	2.45	9.47	2.47	9.67	2.49	10.13	2.53	10.64	2.57
							29	7.87	2.42	8.74	2.46	9.09	2.51	9.29	2.53	9.51	2.55	9.98	2.59	10.50	2.63
							31	7.87	2.48	8.55	2.52	8.92	2.57	9.13	2.59	9.35	2.61	9.84	2.65	10.38	2.69
							33	7.87	2.54	8.38	2.59	8.77	2.63	8.98	2.65	9.21	2.67	9.71	2.72	10.27	2.75
							35	7.87	2.60	8.22	2.65	8.62	2.70	8.91	2.71	9.08	2.74	9.60	2.78	10.17	2.82
							37	7.87	2.67	8.07	2.72	8.49	2.76	8.72	2.78	8.96	2.80	9.50	2.84	10.08	2.88
							39	7.87	2.74	7.94	2.78	8.37	2.83	8.61	2.85	8.86	2.87	9.41	2.91	10.01	2.95
							42	7.87	2.84	7.76	2.89	8.21	2.93	8.46	2.95	8.73	2.97	9.30	3.01	9.92	3.05
							44	7.87	2.91	7.65	2.96	8.13	3.00	8.38	3.02	8.65	3.04	9.24	3.08	9.88	3.12
							46	7.87	2.98	7.56	3.03	8.05	3.07	8.31	3.09	8.59	3.11	9.19	3.15	9.85	3.19
3500	3500	6800			13800	138%	10	10.41	1.99	10.82	2.03	11.24	2.07	11.45	2.09	11.66	2.11	12.08	2.15	12.52	2.20
							12	10.23	2.04	10.64	2.08	11.06	2.12	11.27	2.15	11.48	2.17	11.91	2.21	12.34	2.25
							14	10.05	2.09	10.46	2.14	10.88	2.18	11.09	2.20	11.30	2.22	11.73	2.26	12.16	2.31
							16	9.87	2.15	10.28	2.19	10.70	2.23	10.91	2.26	11.12	2.28	11.55	2.32	11.99	2.36
							18	9.69	2.20	10.10	2.25	10.52	2.29	10.73	2.31	10.95	2.33	11.38	2.38	11.81	2.42
							20	9.51	2.26	9.93	2.31	10.34	2.35	10.56	2.37	10.77	2.39	11.20	2.44	11.64	2.48
							21	9.42	2.29	9.84	2.33	10.26	2.38	10.47	2.40	10.68	2.42	11.11	2.47	11.55	2.51
							23	9.24	2.35	9.66	2.39	10.08	2.44	10.29	2.46	10.51	2.48	10.94	2.53	11.38	2.57
							25	9.07	2.41	9.48	2.45	9.90	2.50	10.12	2.52	10.33	2.54	10.76	2.59	11.20	2.63
							27	8.89	2.47	9.31	2.51	9.73	2.56	9.94	2.58	10.16	2.60	10.59	2.65	11.03	2.69
							29	8.71	2.53	9.13	2.58	9.55	2.62	9.77	2.64	9.98	2.67	10.42	2.71	10.86	2.76
							31	8.54	2.59	8.95	2.64	9.38	2.68	9.59	2.71	9.81	2.73	10.24	2.77	10.68	2.82
							33	8.36	2.66	8.78	2.70	9.20	2.75	9.42	2.77	9.63	2.79	10.07	2.84	10.51	2.88
							35	8.18	2.72	8.60	2.77	9.03	2.81	9.26	2.83	9.46	2.86	9.90	2.90	10.34	2.95
							37	8.01	2.79	8.43	2.83	8.85	2.88	9.07	2.90	9.29	2.93	9.72	2.97	10.17	3.02
							39	7.84	2.85	8.26	2.90	8.68	2.95	8.90	2.97	9.11	2.99	9.55	3.04	10.00	3.09
							42	7.57	2.96	8.00	3.00	8.42	3.05	8.64	3.07	8.86	3.10	9.30	3.14	9.74	3.19
							44	7.40	3.02	7.82	3.07	8.25	3.12	8.47	3.14	8.69	3.17	9.13	3.21	9.57	3.26
							46	7.23	3.09	7.65	3.14	8.08	3.19	8.30	3.21	8.52	3.24	8.96	3.28	9.40	3.33

12. Capacity Table

12-5. AJ100TXJ5KH/EA

COOLING

Combination (Capacity Index)					Combination (Total)	Combination (%)	Outdoor Temperature (°C,DB)	Indoor Temperature (°C, WB)													
								14		16		18		19		20		22		24	
								TC(kW)	PI(kW)	TC(kW)	PI(kW)	TC(kW)	PI(kW)	TC(kW)	PI(kW)	TC(kW)	PI(kW)	TC(kW)	PI(kW)	TC(kW)	PI(kW)
3500	5000	5000			13500	135%	10	10.36	1.98	10.76	2.02	11.18	2.06	11.38	2.08	11.59	2.11	12.02	2.15	12.45	2.19
							12	10.18	2.03	10.58	2.07	11.00	2.12	11.21	2.14	11.42	2.16	11.84	2.20	12.27	2.24
							14	10.00	2.09	10.40	2.13	10.82	2.17	11.03	2.19	11.24	2.21	11.67	2.26	12.10	2.30
							16	9.82	2.14	10.23	2.18	10.64	2.23	10.85	2.25	11.06	2.27	11.49	2.31	11.92	2.36
							18	9.64	2.20	10.05	2.24	10.47	2.28	10.68	2.30	10.89	2.33	11.32	2.37	11.75	2.41
							20	9.46	2.25	9.87	2.30	10.29	2.34	10.50	2.36	10.71	2.38	11.14	2.43	11.58	2.47
							21	9.37	2.28	9.78	2.33	10.20	2.37	10.41	2.39	10.62	2.41	11.05	2.46	11.49	2.50
							23	9.20	2.34	9.61	2.38	10.02	2.43	10.24	2.45	10.45	2.47	10.88	2.52	11.32	2.56
							25	9.02	2.40	9.43	2.44	9.85	2.49	10.06	2.51	10.27	2.53	10.71	2.58	11.14	2.62
							27	8.84	2.46	9.26	2.50	9.67	2.55	9.89	2.57	10.10	2.59	10.53	2.64	10.97	2.68
							29	8.67	2.52	9.08	2.57	9.50	2.61	9.71	2.63	9.93	2.66	10.36	2.70	10.80	2.75
							31	8.49	2.58	8.91	2.63	9.33	2.67	9.54	2.70	9.75	2.72	10.19	2.76	10.63	2.81
							33	8.32	2.65	8.73	2.69	9.15	2.74	9.37	2.76	9.58	2.78	10.01	2.83	10.46	2.87
							35	8.14	2.71	8.56	2.76	8.98	2.80	9.21	2.82	9.41	2.85	9.84	2.89	10.28	2.94
							37	7.97	2.78	8.38	2.82	8.81	2.87	9.02	2.89	9.24	2.92	9.67	2.96	10.11	3.01
							39	7.79	2.84	8.21	2.89	8.64	2.94	8.85	2.96	9.07	2.98	9.50	3.03	9.94	3.07
							42	7.53	2.94	7.95	2.99	8.38	3.04	8.59	3.06	8.81	3.08	9.25	3.13	9.69	3.18
							44	7.36	3.01	7.78	3.06	8.21	3.11	8.42	3.13	8.64	3.15	9.08	3.20	9.52	3.25
							46	7.19	3.08	7.61	3.13	8.04	3.18	8.25	3.20	8.47	3.22	8.91	3.27	9.35	3.32
3500	5000	6800			15300	153%	10	11.02	1.96	11.45	2.01	11.89	2.05	12.11	2.07	12.34	2.09	12.79	2.13	13.25	2.17
							12	10.83	2.02	11.26	2.06	11.70	2.10	11.92	2.12	12.15	2.14	12.60	2.19	13.06	2.23
							14	10.64	2.07	11.07	2.11	11.51	2.16	11.74	2.18	11.96	2.20	12.41	2.24	12.87	2.28
							16	10.45	2.13	10.88	2.17	11.32	2.21	11.55	2.23	11.77	2.25	12.23	2.30	12.69	2.34
							18	10.26	2.18	10.69	2.22	11.14	2.27	11.36	2.29	11.58	2.31	12.04	2.35	12.50	2.40
							20	10.07	2.24	10.50	2.28	10.95	2.32	11.17	2.35	11.40	2.37	11.85	2.41	12.32	2.45
							21	9.97	2.27	10.41	2.31	10.85	2.35	11.08	2.37	11.30	2.40	11.76	2.44	12.22	2.48
							23	9.78	2.32	10.22	2.37	10.67	2.41	10.89	2.43	11.12	2.46	11.58	2.50	12.04	2.54
							25	9.60	2.38	10.03	2.43	10.48	2.47	10.71	2.49	10.93	2.51	11.39	2.56	11.86	2.60
							27	9.41	2.44	9.85	2.49	10.29	2.53	10.52	2.55	10.75	2.58	11.21	2.62	11.67	2.66
							29	9.22	2.50	9.66	2.55	10.11	2.59	10.33	2.62	10.56	2.64	11.02	2.68	11.49	2.73
							31	9.03	2.57	9.48	2.61	9.92	2.66	10.15	2.68	10.38	2.70	10.84	2.75	11.31	2.79
							33	8.85	2.63	9.29	2.67	9.74	2.72	9.97	2.74	10.19	2.76	10.66	2.81	11.12	2.85
							35	8.66	2.69	9.11	2.74	9.55	2.78	9.80	2.80	10.01	2.83	10.47	2.87	10.94	2.92
							37	8.48	2.76	8.92	2.80	9.37	2.85	9.60	2.87	9.83	2.89	10.29	2.94	10.76	2.99
							39	8.29	2.82	8.74	2.87	9.19	2.92	9.42	2.94	9.65	2.96	10.11	3.01	10.58	3.05
							42	8.02	2.92	8.46	2.97	8.91	3.02	9.14	3.04	9.37	3.06	9.84	3.11	10.31	3.16
							44	7.83	2.99	8.28	3.04	8.73	3.09	8.96	3.11	9.19	3.13	9.66	3.18	10.13	3.23
							46	7.65	3.06	8.10	3.11	8.55	3.16	8.78	3.18	9.01	3.20	9.48	3.25	9.95	3.30

12. Capacity Table

12-5. AJ100TXJ5KH/EA

COOLING

Combination (Capacity Index)					Combination (Total)	Combination (%)	Outdoor Temperature (°C,DB)	Indoor Temperature (°C, WB)													
								14		16		18		19		20		22		24	
								TC(kW)	PI(kW)	TC(kW)	PI(kW)	TC(kW)	PI(kW)	TC(kW)	PI(kW)	TC(kW)	PI(kW)	TC(kW)	PI(kW)	TC(kW)	PI(kW)
3500	6800	6800			17100	171%	10	11.02	2.04	11.45	2.09	11.89	2.13	12.11	2.15	12.34	2.17	12.79	2.22	13.25	2.26
							12	10.83	2.10	11.26	2.14	11.70	2.18	11.92	2.21	12.15	2.23	12.60	2.27	13.06	2.32
							14	10.64	2.15	11.07	2.20	11.51	2.24	11.74	2.26	11.96	2.28	12.41	2.33	12.87	2.37
							16	10.45	2.21	10.88	2.25	11.32	2.30	11.55	2.32	11.77	2.34	12.23	2.39	12.69	2.43
							18	10.26	2.27	10.69	2.31	11.14	2.36	11.36	2.38	11.58	2.40	12.04	2.45	12.50	2.49
							20	10.07	2.33	10.50	2.37	10.95	2.42	11.17	2.44	11.40	2.46	11.85	2.51	12.32	2.55
							21	9.97	2.36	10.41	2.40	10.85	2.45	11.08	2.47	11.30	2.49	11.76	2.54	12.22	2.58
							23	9.78	2.42	10.22	2.46	10.67	2.51	10.89	2.53	11.12	2.55	11.58	2.60	12.04	2.64
							25	9.60	2.48	10.03	2.52	10.48	2.57	10.71	2.59	10.93	2.61	11.39	2.66	11.86	2.71
							27	9.41	2.54	9.85	2.58	10.29	2.63	10.52	2.65	10.75	2.68	11.21	2.72	11.67	2.77
							29	9.22	2.60	9.66	2.65	10.11	2.69	10.33	2.72	10.56	2.74	11.02	2.79	11.49	2.83
							31	9.03	2.67	9.48	2.71	9.92	2.76	10.15	2.78	10.38	2.81	10.84	2.85	11.31	2.90
							33	8.85	2.73	9.29	2.78	9.74	2.83	9.97	2.85	10.19	2.87	10.66	2.92	11.12	2.97
							35	8.66	2.80	9.11	2.85	9.55	2.89	9.80	2.91	10.01	2.94	10.47	2.99	10.94	3.03
							37	8.48	2.87	8.92	2.91	9.37	2.96	9.60	2.98	9.83	3.01	10.29	3.06	10.76	3.10
							39	8.29	2.93	8.74	2.98	9.19	3.03	9.42	3.05	9.65	3.08	10.11	3.13	10.58	3.17
							42	8.02	3.04	8.46	3.09	8.91	3.14	9.14	3.16	9.37	3.18	9.84	3.23	10.31	3.28
							44	7.83	3.11	8.28	3.16	8.73	3.21	8.96	3.23	9.19	3.26	9.66	3.30	10.13	3.35
							46	7.65	3.18	8.10	3.23	8.55	3.28	8.78	3.30	9.01	3.33	9.48	3.38	9.95	3.43
5000	5000	5000			15000	150%	10	11.02	1.96	11.45	2.00	11.89	2.04	12.11	2.06	12.34	2.08	12.79	2.12	13.25	2.17
							12	10.83	2.01	11.26	2.05	11.70	2.09	11.92	2.12	12.15	2.14	12.60	2.18	13.06	2.22
							14	10.64	2.06	11.07	2.11	11.51	2.15	11.74	2.17	11.96	2.19	12.41	2.23	12.87	2.27
							16	10.45	2.12	10.88	2.16	11.32	2.20	11.55	2.22	11.77	2.25	12.23	2.29	12.69	2.33
							18	10.26	2.17	10.69	2.22	11.14	2.26	11.36	2.28	11.58	2.30	12.04	2.34	12.50	2.39
							20	10.07	2.23	10.50	2.27	10.95	2.32	11.17	2.34	11.40	2.36	11.85	2.40	12.32	2.45
							21	9.97	2.26	10.41	2.30	10.85	2.34	11.08	2.37	11.30	2.39	11.76	2.43	12.22	2.47
							23	9.78	2.32	10.22	2.36	10.67	2.40	10.89	2.42	11.12	2.45	11.58	2.49	12.04	2.53
							25	9.60	2.37	10.03	2.42	10.48	2.46	10.71	2.48	10.93	2.51	11.39	2.55	11.86	2.59
							27	9.41	2.43	9.85	2.48	10.29	2.52	10.52	2.54	10.75	2.57	11.21	2.61	11.67	2.65
							29	9.22	2.49	9.66	2.54	10.11	2.58	10.33	2.61	10.56	2.63	11.02	2.67	11.49	2.72
							31	9.03	2.56	9.48	2.60	9.92	2.65	10.15	2.67	10.38	2.69	10.84	2.74	11.31	2.78
							33	8.85	2.62	9.29	2.66	9.74	2.71	9.97	2.73	10.19	2.75	10.66	2.80	11.12	2.84
							35	8.66	2.68	9.11	2.73	9.55	2.77	9.80	2.79	10.01	2.82	10.47	2.86	10.94	2.91
							37	8.48	2.75	8.92	2.79	9.37	2.84	9.60	2.86	9.83	2.88	10.29	2.93	10.76	2.98
							39	8.29	2.81	8.74	2.86	9.19	2.90	9.42	2.93	9.65	2.95	10.11	3.00	10.58	3.04
							42	8.02	2.91	8.46	2.96	8.91	3.01	9.14	3.03	9.37	3.05	9.84	3.10	10.31	3.14
							44	7.83	2.98	8.28	3.03	8.73	3.07	8.96	3.10	9.19	3.12	9.66	3.17	10.13	3.21
							46	7.65	3.05	8.10	3.10	8.55	3.14	8.78	3.17	9.01	3.19	9.48	3.24	9.95	3.28

12. Capacity Table

12-5. AJ100TXJ5KH/EA

COOLING

Combination (Capacity Index)					Combination (Total)	Combination (%)	Outdoor Temperature (°C,DB)	Indoor Temperature (°C, WB)													
								14		16		18		19		20		22		24	
								TC(kW)	PI(kW)	TC(kW)	PI(kW)	TC(kW)	PI(kW)	TC(kW)	PI(kW)	TC(kW)	PI(kW)	TC(kW)	PI(kW)	TC(kW)	PI(kW)
							10	11.02	2.04	11.45	2.09	11.89	2.13	12.11	2.15	12.34	2.17	12.79	2.22	13.25	2.26
							12	10.83	2.10	11.26	2.14	11.70	2.18	11.92	2.21	12.15	2.23	12.60	2.27	13.06	2.32
							14	10.64	2.15	11.07	2.20	11.51	2.24	11.74	2.26	11.96	2.28	12.41	2.33	12.87	2.37
							16	10.45	2.21	10.88	2.25	11.32	2.30	11.55	2.32	11.77	2.34	12.23	2.39	12.69	2.43
							18	10.26	2.27	10.69	2.31	11.14	2.36	11.36	2.38	11.58	2.40	12.04	2.45	12.50	2.49
							20	10.07	2.33	10.50	2.37	10.95	2.42	11.17	2.44	11.40	2.46	11.85	2.51	12.32	2.55
							21	9.97	2.36	10.41	2.40	10.85	2.45	11.08	2.47	11.30	2.49	11.76	2.54	12.22	2.58
							23	9.78	2.42	10.22	2.46	10.67	2.51	10.89	2.53	11.12	2.55	11.58	2.60	12.04	2.64
							25	9.60	2.48	10.03	2.52	10.48	2.57	10.71	2.59	10.93	2.61	11.39	2.66	11.86	2.71
5000	5000	6800			16800	168%	27	9.41	2.54	9.85	2.58	10.29	2.63	10.52	2.65	10.75	2.68	11.21	2.72	11.67	2.77
							29	9.22	2.60	9.66	2.65	10.11	2.69	10.33	2.72	10.56	2.74	11.02	2.79	11.49	2.83
							31	9.03	2.67	9.48	2.71	9.92	2.76	10.15	2.78	10.38	2.81	10.84	2.85	11.31	2.90
							33	8.85	2.73	9.29	2.78	9.74	2.83	9.97	2.85	10.19	2.87	10.66	2.92	11.12	2.97
							35	8.66	2.80	9.11	2.85	9.55	2.89	9.80	2.91	10.01	2.94	10.47	2.99	10.94	3.03
							37	8.48	2.87	8.92	2.91	9.37	2.96	9.60	2.98	9.83	3.01	10.29	3.06	10.76	3.10
							39	8.29	2.93	8.74	2.98	9.19	3.03	9.42	3.05	9.65	3.08	10.11	3.13	10.58	3.17
							42	8.02	3.04	8.46	3.09	8.91	3.14	9.14	3.16	9.37	3.18	9.84	3.23	10.31	3.28
							44	7.83	3.11	8.28	3.16	8.73	3.21	8.96	3.23	9.19	3.26	9.66	3.30	10.13	3.35
							46	7.65	3.18	8.10	3.23	8.55	3.28	8.78	3.30	9.01	3.33	9.48	3.38	9.95	3.43
							10	7.07	1.67	9.97	1.71	10.16	1.76	10.28	1.78	10.40	1.79	10.69	1.83	11.03	1.87
							12	7.07	1.71	9.70	1.76	9.90	1.80	10.02	1.82	10.16	1.84	10.46	1.87	10.82	1.91
							14	7.07	1.76	9.44	1.80	9.66	1.84	9.79	1.86	9.93	1.88	10.24	1.92	10.61	1.95
							16	7.07	1.80	9.19	1.84	9.42	1.88	9.56	1.90	9.70	1.92	10.04	1.96	10.42	2.00
							18	7.07	1.85	8.95	1.89	9.20	1.93	9.34	1.95	9.49	1.97	9.84	2.01	10.24	2.04
							20	7.07	1.89	8.73	1.94	8.99	1.98	9.13	2.00	9.29	2.01	9.65	2.05	10.06	2.09
							21	7.07	1.92	8.62	1.96	8.88	2.00	9.03	2.02	9.20	2.04	9.57	2.08	9.98	2.11
							23	7.07	1.97	8.41	2.01	8.69	2.05	8.84	2.07	9.02	2.09	9.40	2.12	9.83	2.16
							25	7.07	2.02	8.21	2.06	8.50	2.10	8.67	2.12	8.84	2.14	9.24	2.17	9.68	2.21
2000	2000	2000	2000		8000	80%	27	7.07	2.07	8.02	2.11	8.33	2.15	8.50	2.17	8.68	2.19	9.09	2.22	9.55	2.26
							29	7.07	2.12	7.84	2.16	8.16	2.20	8.34	2.22	8.53	2.24	8.96	2.28	9.43	2.31
							31	7.07	2.18	7.68	2.22	8.01	2.26	8.20	2.27	8.40	2.29	8.83	2.33	9.32	2.36
							33	7.07	2.23	7.52	2.27	7.87	2.31	8.06	2.33	8.27	2.35	8.72	2.38	9.22	2.42
							35	7.07	2.29	7.38	2.33	7.74	2.37	8.00	2.38	8.15	2.40	8.62	2.44	9.13	2.47
							37	7.07	2.35	7.25	2.39	7.62	2.42	7.83	2.44	8.05	2.46	8.53	2.50	9.05	2.53
							39	7.07	2.40	7.13	2.44	7.52	2.48	7.73	2.50	7.96	2.52	8.45	2.56	8.99	2.59
							42	7.07	2.50	6.97	2.54	7.38	2.57	7.60	2.59	7.84	2.61	8.35	2.65	8.91	2.68
							44	7.07	2.56	6.87	2.60	7.30	2.64	7.53	2.65	7.77	2.67	8.30	2.71	8.87	2.74
							46	7.07	2.62	6.79	2.66	7.23	2.70	7.46	2.72	7.72	2.74	8.25	2.77	8.85	2.80

12. Capacity Table

12-5. AJ100TXJ5KH/EA

COOLING

Combination (Capacity Index)					Combination (Total)	Combination (%)	Outdoor Temperature (°C,DB)	Indoor Temperature (°C, WB)													
								14		16		18		19		20		22		24	
								TC(kW)	PI(kW)	TC(kW)	PI(kW)	TC(kW)	PI(kW)	TC(kW)	PI(kW)	TC(kW)	PI(kW)	TC(kW)	PI(kW)	TC(kW)	PI(kW)
2000	2000	2000	2500		8500	85%	10	7.51	1.77	10.60	1.82	10.80	1.86	10.92	1.88	11.05	1.90	11.36	1.94	11.72	1.98
							12	7.51	1.81	10.31	1.86	10.52	1.90	10.65	1.92	10.79	1.94	11.12	1.98	11.49	2.02
							14	7.51	1.86	10.03	1.91	10.26	1.95	10.40	1.97	10.55	1.99	10.88	2.03	11.28	2.07
							16	7.51	1.91	9.77	1.95	10.01	1.99	10.15	2.02	10.31	2.04	10.66	2.08	11.07	2.11
							18	7.51	1.96	9.51	2.00	9.77	2.04	9.92	2.06	10.09	2.08	10.45	2.12	10.88	2.16
							20	7.51	2.01	9.27	2.05	9.55	2.09	9.70	2.11	9.87	2.13	10.26	2.17	10.69	2.21
							21	7.51	2.03	9.16	2.08	9.44	2.12	9.60	2.14	9.77	2.16	10.16	2.20	10.61	2.24
							23	7.51	2.08	8.93	2.13	9.23	2.17	9.40	2.19	9.58	2.21	9.98	2.25	10.44	2.29
							25	7.51	2.14	8.72	2.18	9.03	2.22	9.21	2.24	9.40	2.26	9.82	2.30	10.29	2.34
							27	7.51	2.19	8.52	2.23	8.85	2.28	9.03	2.30	9.23	2.32	9.66	2.36	10.15	2.39
							29	7.51	2.25	8.33	2.29	8.67	2.33	8.86	2.35	9.07	2.37	9.52	2.41	10.02	2.45
							31	7.51	2.30	8.16	2.35	8.51	2.39	8.71	2.41	8.92	2.43	9.38	2.47	9.90	2.50
							33	7.51	2.36	7.99	2.41	8.36	2.45	8.57	2.47	8.79	2.49	9.26	2.52	9.80	2.56
							35	7.51	2.42	7.84	2.46	8.23	2.51	8.50	2.52	8.66	2.55	9.16	2.58	9.70	2.62
							37	7.51	2.48	7.70	2.53	8.10	2.57	8.32	2.59	8.55	2.61	9.06	2.64	9.62	2.68
							39	7.51	2.55	7.57	2.59	7.99	2.63	8.21	2.65	8.45	2.67	8.97	2.71	9.55	2.74
							42	7.51	2.64	7.40	2.68	7.84	2.72	8.07	2.74	8.33	2.76	8.87	2.80	9.47	2.84
							44	7.51	2.71	7.30	2.75	7.75	2.79	8.00	2.81	8.26	2.83	8.81	2.87	9.43	2.90
							46	7.51	2.78	7.21	2.82	7.68	2.86	7.93	2.88	8.20	2.90	8.77	2.93	9.40	2.97
2000	2000	2000	3500		9500	95%	10	7.76	1.84	10.95	1.89	11.15	1.93	11.28	1.95	11.42	1.98	11.73	2.02	12.11	2.06
							12	7.76	1.89	10.65	1.93	10.87	1.98	11.00	2.00	11.15	2.02	11.48	2.06	11.87	2.10
							14	7.76	1.93	10.36	1.98	10.60	2.03	10.74	2.05	10.89	2.07	11.24	2.11	11.65	2.15
							16	7.76	1.98	10.09	2.03	10.34	2.07	10.49	2.10	10.65	2.12	11.01	2.16	11.44	2.20
							18	7.76	2.03	9.83	2.08	10.10	2.12	10.25	2.15	10.42	2.17	10.80	2.21	11.23	2.25
							20	7.76	2.09	9.58	2.13	9.86	2.18	10.02	2.20	10.20	2.22	10.60	2.26	11.05	2.30
							21	7.76	2.11	9.46	2.16	9.75	2.20	9.92	2.22	10.10	2.24	10.50	2.29	10.96	2.32
							23	7.76	2.17	9.23	2.21	9.53	2.26	9.71	2.28	9.90	2.30	10.31	2.34	10.79	2.38
							25	7.76	2.22	9.01	2.27	9.33	2.31	9.51	2.33	9.71	2.35	10.14	2.39	10.63	2.43
							27	7.76	2.28	8.80	2.32	9.14	2.37	9.33	2.39	9.53	2.41	9.98	2.45	10.48	2.49
							29	7.76	2.34	8.61	2.38	8.96	2.42	9.16	2.45	9.37	2.47	9.83	2.51	10.35	2.54
							31	7.76	2.40	8.43	2.44	8.79	2.48	9.00	2.50	9.22	2.52	9.69	2.56	10.23	2.60
							33	7.76	2.46	8.26	2.50	8.64	2.54	8.85	2.56	9.08	2.59	9.57	2.62	10.12	2.66
							35	7.76	2.52	8.10	2.56	8.50	2.61	8.78	2.62	8.95	2.65	9.46	2.69	10.02	2.72
							37	7.76	2.58	7.95	2.63	8.37	2.67	8.59	2.69	8.83	2.71	9.36	2.75	9.94	2.79
							39	7.76	2.65	7.82	2.69	8.25	2.73	8.48	2.75	8.73	2.77	9.27	2.81	9.87	2.85
							42	7.76	2.75	7.64	2.79	8.09	2.83	8.34	2.85	8.60	2.87	9.16	2.91	9.78	2.95
							44	7.76	2.82	7.54	2.86	8.01	2.90	8.26	2.92	8.53	2.94	9.10	2.98	9.74	3.02
							46	7.76	2.89	7.45	2.93	7.93	2.97	8.19	2.99	8.47	3.01	9.06	3.05	9.71	3.09

12. Capacity Table

12-5. AJ100TXJ5KH/EA

COOLING

Combination (Capacity Index)					Combination (Total)	Combination (%)	Outdoor Temperature (°C,DB)	Indoor Temperature (°C, WB)													
								14		16		18		19		20		22		24	
								TC(kW)	PI(kW)	TC(kW)	PI(kW)	TC(kW)	PI(kW)	TC(kW)	PI(kW)	TC(kW)	PI(kW)	TC(kW)	PI(kW)	TC(kW)	PI(kW)
							10	7.68	1.89	10.83	1.94	11.04	1.98	11.16	2.01	11.30	2.03	11.61	2.07	11.99	2.11
							12	7.68	1.94	10.54	1.98	10.76	2.03	10.89	2.05	11.03	2.08	11.36	2.12	11.75	2.16
							14	7.68	1.99	10.26	2.03	10.49	2.08	10.63	2.10	10.78	2.12	11.13	2.17	11.53	2.21
							16	7.68	2.04	9.99	2.08	10.24	2.13	10.38	2.15	10.54	2.17	10.90	2.22	11.32	2.26
							18	7.68	2.09	9.73	2.14	9.99	2.18	10.14	2.20	10.31	2.22	10.69	2.27	11.12	2.31
							20	7.68	2.14	9.48	2.19	9.76	2.23	9.92	2.26	10.10	2.28	10.49	2.32	10.93	2.36
							21	7.68	2.17	9.36	2.22	9.65	2.26	9.81	2.28	9.99	2.30	10.39	2.35	10.84	2.39
							23	7.68	2.22	9.13	2.27	9.44	2.32	9.61	2.34	9.79	2.36	10.21	2.40	10.68	2.44
							25	7.68	2.28	8.92	2.33	9.23	2.37	9.41	2.39	9.61	2.42	10.04	2.46	10.52	2.50
2000	2000	2000	5000		11000	110%	27	7.68	2.34	8.71	2.38	9.05	2.43	9.23	2.45	9.43	2.47	9.88	2.51	10.38	2.55
							29	7.68	2.40	8.52	2.44	8.87	2.49	9.06	2.51	9.27	2.53	9.73	2.57	10.24	2.61
							31	7.68	2.46	8.34	2.51	8.70	2.55	8.91	2.57	9.12	2.59	9.59	2.63	10.12	2.67
							33	7.68	2.52	8.17	2.57	8.55	2.61	8.76	2.63	8.98	2.65	9.47	2.70	10.02	2.73
							35	7.68	2.59	8.02	2.63	8.41	2.68	8.69	2.69	8.86	2.72	9.36	2.76	9.92	2.80
							37	7.68	2.65	7.87	2.70	8.28	2.74	8.51	2.76	8.74	2.78	9.26	2.82	9.84	2.86
							39	7.68	2.72	7.74	2.76	8.16	2.81	8.40	2.83	8.64	2.85	9.18	2.89	9.76	2.93
							42	7.68	2.82	7.57	2.87	8.01	2.91	8.25	2.93	8.51	2.95	9.07	2.99	9.68	3.03
							44	7.68	2.89	7.46	2.94	7.92	2.98	8.18	3.00	8.44	3.02	9.01	3.06	9.64	3.10
							46	7.68	2.96	7.38	3.01	7.85	3.05	8.11	3.07	8.38	3.09	8.97	3.13	9.61	3.17
							10	8.02	1.97	11.32	2.02	11.53	2.06	11.66	2.09	11.81	2.11	12.14	2.16	12.52	2.20
							12	8.02	2.02	11.01	2.07	11.24	2.11	11.38	2.14	11.53	2.16	11.87	2.20	12.28	2.25
							14	8.02	2.07	10.72	2.12	10.96	2.16	11.11	2.19	11.27	2.21	11.63	2.25	12.05	2.30
							16	8.02	2.12	10.43	2.17	10.69	2.22	10.85	2.24	11.01	2.26	11.39	2.31	11.83	2.35
							18	8.02	2.17	10.16	2.22	10.44	2.27	10.60	2.29	10.77	2.32	11.17	2.36	11.62	2.40
							20	8.02	2.23	9.91	2.28	10.20	2.32	10.37	2.35	10.55	2.37	10.96	2.41	11.42	2.46
							21	8.02	2.26	9.78	2.31	10.08	2.35	10.25	2.38	10.44	2.40	10.86	2.44	11.33	2.48
							23	8.02	2.31	9.54	2.36	9.86	2.41	10.04	2.43	10.23	2.46	10.67	2.50	11.16	2.54
							25	8.02	2.37	9.32	2.42	9.65	2.47	9.84	2.49	10.04	2.51	10.49	2.56	10.99	2.60
2000	2000	2000	6800		12800	128%	27	8.02	2.43	9.10	2.48	9.45	2.53	9.65	2.55	9.86	2.57	10.32	2.62	10.84	2.66
							29	8.02	2.50	8.90	2.54	9.27	2.59	9.47	2.61	9.69	2.64	10.17	2.68	10.70	2.72
							31	8.02	2.56	8.71	2.61	9.09	2.65	9.30	2.68	9.53	2.70	10.03	2.74	10.58	2.78
							33	8.02	2.62	8.54	2.67	8.93	2.72	9.15	2.74	9.39	2.76	9.90	2.81	10.46	2.85
							35	8.02	2.69	8.38	2.74	8.79	2.78	9.08	2.80	9.25	2.83	9.78	2.87	10.36	2.91
							37	8.02	2.76	8.23	2.81	8.65	2.85	8.89	2.87	9.14	2.90	9.68	2.94	10.28	2.98
							39	8.02	2.83	8.09	2.88	8.53	2.92	8.77	2.94	9.03	2.96	9.59	3.01	10.20	3.05
							42	8.02	2.94	7.91	2.98	8.37	3.03	8.63	3.05	8.89	3.07	9.47	3.11	10.11	3.15
							44	8.02	3.01	7.80	3.06	8.28	3.10	8.54	3.12	8.82	3.14	9.42	3.19	10.07	3.23
							46	8.02	3.08	7.71	3.13	8.20	3.17	8.47	3.20	8.76	3.22	9.37	3.26	10.04	3.30

12. Capacity Table

12-5. AJ100TXJ5KH/EA

COOLING

Combination (Capacity Index)					Combination (Total)	Combination (%)	Outdoor Temperature (°C,DB)	Indoor Temperature (°C, WB)													
								14		16		18		19		20		22		24	
								TC(kW)	PI(kW)	TC(kW)	PI(kW)	TC(kW)	PI(kW)	TC(kW)	PI(kW)	TC(kW)	PI(kW)	TC(kW)	PI(kW)	TC(kW)	PI(kW)
2000	2000	2500	2500		9000	90%	10	7.69	1.84	10.85	1.89	11.05	1.93	11.17	1.95	11.31	1.98	11.63	2.02	12.00	2.06
							12	7.69	1.89	10.55	1.93	10.77	1.98	10.90	2.00	11.05	2.02	11.38	2.06	11.76	2.10
							14	7.69	1.93	10.27	1.98	10.50	2.03	10.64	2.05	10.79	2.07	11.14	2.11	11.54	2.15
							16	7.69	1.98	10.00	2.03	10.25	2.07	10.39	2.10	10.55	2.12	10.91	2.16	11.33	2.20
							18	7.69	2.03	9.74	2.08	10.00	2.12	10.16	2.15	10.32	2.17	10.70	2.21	11.13	2.25
							20	7.69	2.09	9.49	2.13	9.77	2.18	9.93	2.20	10.11	2.22	10.50	2.26	10.95	2.30
							21	7.69	2.11	9.37	2.16	9.66	2.20	9.82	2.22	10.00	2.24	10.40	2.29	10.86	2.32
							23	7.69	2.17	9.14	2.21	9.45	2.26	9.62	2.28	9.80	2.30	10.22	2.34	10.69	2.38
							25	7.69	2.22	8.93	2.27	9.24	2.31	9.42	2.33	9.62	2.35	10.05	2.39	10.53	2.43
							27	7.69	2.28	8.72	2.32	9.06	2.37	9.24	2.39	9.44	2.41	9.89	2.45	10.39	2.49
							29	7.69	2.34	8.53	2.38	8.88	2.42	9.07	2.45	9.28	2.47	9.74	2.51	10.26	2.54
							31	7.69	2.40	8.35	2.44	8.71	2.48	8.92	2.50	9.13	2.52	9.61	2.56	10.14	2.60
							33	7.69	2.46	8.18	2.50	8.56	2.54	8.77	2.56	8.99	2.59	9.48	2.62	10.03	2.66
							35	7.69	2.52	8.03	2.56	8.42	2.61	8.70	2.62	8.87	2.65	9.37	2.69	9.93	2.72
							37	7.69	2.58	7.88	2.63	8.29	2.67	8.51	2.69	8.75	2.71	9.27	2.75	9.85	2.79
							39	7.69	2.65	7.75	2.69	8.17	2.73	8.41	2.75	8.65	2.77	9.19	2.81	9.78	2.85
							42	7.69	2.75	7.58	2.79	8.02	2.83	8.26	2.85	8.52	2.87	9.08	2.91	9.69	2.95
							44	7.69	2.82	7.47	2.86	7.93	2.90	8.19	2.92	8.45	2.94	9.02	2.98	9.65	3.02
							46	7.69	2.89	7.38	2.93	7.86	2.97	8.12	2.99	8.39	3.01	8.98	3.05	9.62	3.09
2000	2000	2500	3500		10000	100%	10	7.82	1.84	11.03	1.89	11.24	1.93	11.37	1.95	11.51	1.98	11.83	2.02	12.21	2.06
							12	7.82	1.89	10.73	1.93	10.96	1.98	11.09	2.00	11.24	2.02	11.57	2.06	11.97	2.10
							14	7.82	1.93	10.44	1.98	10.68	2.03	10.82	2.05	10.98	2.07	11.33	2.11	11.74	2.15
							16	7.82	1.98	10.17	2.03	10.42	2.07	10.57	2.10	10.73	2.12	11.10	2.16	11.53	2.20
							18	7.82	2.03	9.91	2.08	10.18	2.12	10.33	2.15	10.50	2.17	10.88	2.21	11.32	2.25
							20	7.82	2.09	9.65	2.13	9.94	2.18	10.10	2.20	10.28	2.22	10.68	2.26	11.13	2.30
							21	7.82	2.11	9.53	2.16	9.83	2.20	9.99	2.22	10.18	2.24	10.58	2.29	11.04	2.32
							23	7.82	2.17	9.30	2.21	9.61	2.26	9.78	2.28	9.97	2.30	10.39	2.34	10.87	2.38
							25	7.82	2.22	9.08	2.27	9.40	2.31	9.59	2.33	9.78	2.35	10.22	2.39	10.71	2.43
							27	7.82	2.28	8.87	2.32	9.21	2.37	9.40	2.39	9.61	2.41	10.06	2.45	10.57	2.49
							29	7.82	2.34	8.68	2.38	9.03	2.42	9.23	2.45	9.44	2.47	9.91	2.51	10.43	2.54
							31	7.82	2.40	8.49	2.44	8.86	2.48	9.07	2.50	9.29	2.52	9.77	2.56	10.31	2.60
							33	7.82	2.46	8.32	2.50	8.71	2.54	8.92	2.56	9.15	2.59	9.65	2.62	10.20	2.66
							35	7.82	2.52	8.16	2.56	8.56	2.61	8.85	2.62	9.02	2.65	9.53	2.69	10.10	2.72
							37	7.82	2.58	8.02	2.63	8.43	2.67	8.66	2.69	8.90	2.71	9.43	2.75	10.02	2.79
							39	7.82	2.65	7.88	2.69	8.31	2.73	8.55	2.75	8.80	2.77	9.34	2.81	9.94	2.85
							42	7.82	2.75	7.71	2.79	8.16	2.83	8.41	2.85	8.67	2.87	9.23	2.91	9.86	2.95
							44	7.82	2.82	7.60	2.86	8.07	2.90	8.33	2.92	8.60	2.94	9.18	2.98	9.82	3.02
							46	7.82	2.89	7.51	2.93	8.00	2.97	8.26	2.99	8.54	3.01	9.13	3.05	9.79	3.09

12. Capacity Table

12-5. AJ100TXJ5KH/EA

COOLING

Combination (Capacity Index)					Combination (Total)	Combination (%)	Outdoor Temperature (°C,DB)	Indoor Temperature (°C, WB)													
								14		16		18		19		20		22		24	
								TC(kW)	PI(kW)	TC(kW)	PI(kW)	TC(kW)	PI(kW)	TC(kW)	PI(kW)	TC(kW)	PI(kW)	TC(kW)	PI(kW)	TC(kW)	PI(kW)
							10	7.78	1.92	10.97	1.97	11.18	2.01	11.30	2.04	11.44	2.06	11.76	2.10	12.14	2.14
							12	7.78	1.97	10.67	2.01	10.89	2.06	11.03	2.08	11.17	2.11	11.51	2.15	11.90	2.19
							14	7.78	2.02	10.39	2.06	10.62	2.11	10.76	2.13	10.92	2.16	11.27	2.20	11.67	2.24
							16	7.78	2.07	10.11	2.11	10.36	2.16	10.51	2.18	10.67	2.21	11.04	2.25	11.46	2.29
							18	7.78	2.12	9.85	2.17	10.12	2.21	10.27	2.24	10.44	2.26	10.82	2.30	11.26	2.34
							20	7.78	2.17	9.60	2.22	9.88	2.27	10.05	2.29	10.22	2.31	10.62	2.35	11.07	2.39
							21	7.78	2.20	9.48	2.25	9.77	2.29	9.94	2.32	10.12	2.34	10.52	2.38	10.98	2.42
							23	7.78	2.26	9.25	2.30	9.56	2.35	9.73	2.37	9.92	2.39	10.34	2.44	10.81	2.48
							25	7.78	2.31	9.03	2.36	9.35	2.41	9.53	2.43	9.73	2.45	10.16	2.49	10.65	2.53
2000	2000	2500	5000		11500	115%	27	7.78	2.37	8.82	2.42	9.16	2.47	9.35	2.49	9.55	2.51	10.00	2.55	10.51	2.59
							29	7.78	2.43	8.63	2.48	8.98	2.53	9.18	2.55	9.39	2.57	9.85	2.61	10.37	2.65
							31	7.78	2.50	8.45	2.54	8.81	2.59	9.02	2.61	9.24	2.63	9.72	2.67	10.25	2.71
							33	7.78	2.56	8.28	2.61	8.66	2.65	8.87	2.67	9.10	2.69	9.59	2.74	10.14	2.78
							35	7.78	2.62	8.12	2.67	8.52	2.71	8.80	2.73	8.97	2.76	9.48	2.80	10.05	2.84
							37	7.78	2.69	7.97	2.74	8.39	2.78	8.61	2.80	8.85	2.82	9.38	2.86	9.96	2.90
							39	7.78	2.76	7.84	2.80	8.27	2.85	8.50	2.87	8.75	2.89	9.29	2.93	9.89	2.97
							42	7.78	2.86	7.66	2.91	8.11	2.95	8.36	2.97	8.62	2.99	9.18	3.04	9.80	3.07
							44	7.78	2.93	7.56	2.98	8.03	3.02	8.28	3.04	8.55	3.07	9.13	3.11	9.76	3.14
							46	7.78	3.01	7.47	3.05	7.95	3.10	8.21	3.12	8.49	3.14	9.08	3.18	9.73	3.22
							10	10.30	1.96	10.70	2.01	11.11	2.05	11.32	2.07	11.53	2.09	11.95	2.13	12.38	2.17
							12	10.12	2.02	10.53	2.06	10.94	2.10	11.15	2.12	11.35	2.14	11.78	2.19	12.21	2.23
							14	9.94	2.07	10.35	2.11	10.76	2.16	10.97	2.18	11.18	2.20	11.60	2.24	12.03	2.28
							16	9.76	2.13	10.17	2.17	10.58	2.21	10.79	2.23	11.00	2.25	11.43	2.30	11.86	2.34
							18	9.59	2.18	9.99	2.22	10.41	2.27	10.62	2.29	10.83	2.31	11.25	2.35	11.69	2.40
							20	9.41	2.24	9.82	2.28	10.23	2.32	10.44	2.35	10.65	2.37	11.08	2.41	11.51	2.45
							21	9.32	2.27	9.73	2.31	10.15	2.35	10.35	2.37	10.57	2.40	10.99	2.44	11.43	2.48
							23	9.15	2.32	9.55	2.37	9.97	2.41	10.18	2.43	10.39	2.46	10.82	2.50	11.25	2.54
							25	8.97	2.38	9.38	2.43	9.80	2.47	10.01	2.49	10.22	2.51	10.65	2.56	11.08	2.60
2000	2000	2500	6800		13300	133%	27	8.79	2.44	9.20	2.49	9.62	2.53	9.83	2.55	10.05	2.58	10.47	2.62	10.91	2.66
							29	8.62	2.50	9.03	2.55	9.45	2.59	9.66	2.62	9.87	2.64	10.30	2.68	10.74	2.73
							31	8.44	2.57	8.86	2.61	9.28	2.66	9.49	2.68	9.70	2.70	10.13	2.75	10.57	2.79
							33	8.27	2.63	8.68	2.67	9.10	2.72	9.32	2.74	9.53	2.76	9.96	2.81	10.40	2.85
							35	8.10	2.69	8.51	2.74	8.93	2.78	9.16	2.80	9.36	2.83	9.79	2.87	10.23	2.92
							37	7.92	2.76	8.34	2.80	8.76	2.85	8.97	2.87	9.19	2.89	9.62	2.94	10.06	2.99
							39	7.75	2.82	8.17	2.87	8.59	2.92	8.80	2.94	9.02	2.96	9.45	3.01	9.89	3.05
							42	7.49	2.92	7.91	2.97	8.33	3.02	8.55	3.04	8.76	3.06	9.20	3.11	9.64	3.16
							44	7.32	2.99	7.74	3.04	8.16	3.09	8.38	3.11	8.59	3.13	9.03	3.18	9.47	3.23
							46	7.15	3.06	7.57	3.11	7.99	3.16	8.21	3.18	8.42	3.20	8.86	3.25	9.30	3.30

12. Capacity Table

12-5. AJ100TXJ5KH/EA

COOLING

Combination (Capacity Index)					Combination (Total)	Combination (%)	Outdoor Temperature (°C,DB)	Indoor Temperature (°C, WB)													
								14		16		18		19		20		22		24	
								TC(kW)	PI(kW)	TC(kW)	PI(kW)	TC(kW)	PI(kW)	TC(kW)	PI(kW)	TC(kW)	PI(kW)	TC(kW)	PI(kW)	TC(kW)	PI(kW)
2000	2000	3500	3500		11000	110%	10	7.69	1.88	10.85	1.93	11.05	1.98	11.17	2.00	11.31	2.02	11.63	2.06	12.00	2.10
							12	7.69	1.93	10.55	1.98	10.77	2.02	10.90	2.05	11.05	2.07	11.38	2.11	11.76	2.15
							14	7.69	1.98	10.27	2.03	10.50	2.07	10.64	2.09	10.79	2.12	11.14	2.16	11.54	2.20
							16	7.69	2.03	10.00	2.08	10.25	2.12	10.39	2.14	10.55	2.17	10.91	2.21	11.33	2.25
							18	7.69	2.08	9.74	2.13	10.00	2.17	10.16	2.19	10.32	2.22	10.70	2.26	11.13	2.30
							20	7.69	2.13	9.49	2.18	9.77	2.23	9.93	2.25	10.11	2.27	10.50	2.31	10.95	2.35
							21	7.69	2.16	9.37	2.21	9.66	2.25	9.82	2.27	10.00	2.30	10.40	2.34	10.86	2.38
							23	7.69	2.22	9.14	2.26	9.45	2.31	9.62	2.33	9.80	2.35	10.22	2.39	10.69	2.43
							25	7.69	2.27	8.93	2.32	9.24	2.36	9.42	2.38	9.62	2.41	10.05	2.45	10.53	2.49
							27	7.69	2.33	8.72	2.38	9.06	2.42	9.24	2.44	9.44	2.46	9.89	2.50	10.39	2.54
							29	7.69	2.39	8.53	2.44	8.88	2.48	9.07	2.50	9.28	2.52	9.74	2.56	10.26	2.60
							31	7.69	2.45	8.35	2.50	8.71	2.54	8.92	2.56	9.13	2.58	9.61	2.62	10.14	2.66
							33	7.69	2.51	8.18	2.56	8.56	2.60	8.77	2.62	8.99	2.64	9.48	2.69	10.03	2.72
							35	7.69	2.58	8.03	2.62	8.42	2.67	8.70	2.68	8.87	2.71	9.37	2.75	9.93	2.79
							37	7.69	2.64	7.88	2.69	8.29	2.73	8.51	2.75	8.75	2.77	9.27	2.81	9.85	2.85
							39	7.69	2.71	7.75	2.75	8.17	2.80	8.41	2.82	8.65	2.84	9.19	2.88	9.78	2.92
							42	7.69	2.81	7.58	2.85	8.02	2.90	8.26	2.92	8.52	2.94	9.08	2.98	9.69	3.02
							44	7.69	2.88	7.47	2.92	7.93	2.97	8.19	2.99	8.45	3.01	9.02	3.05	9.65	3.09
							46	7.69	2.95	7.38	3.00	7.86	3.04	8.12	3.06	8.39	3.08	8.98	3.12	9.62	3.16
2000	2000	3500	5000		12500	125%	10	7.95	1.96	11.22	2.01	11.43	2.06	11.56	2.08	11.70	2.10	12.03	2.15	12.41	2.19
							12	7.95	2.01	10.91	2.06	11.14	2.11	11.28	2.13	11.43	2.15	11.77	2.20	12.17	2.24
							14	7.95	2.06	10.62	2.11	10.86	2.16	11.01	2.18	11.17	2.20	11.52	2.25	11.94	2.29
							16	7.95	2.11	10.34	2.16	10.60	2.21	10.75	2.23	10.92	2.25	11.29	2.30	11.72	2.34
							18	7.95	2.17	10.07	2.21	10.35	2.26	10.51	2.28	10.68	2.31	11.07	2.35	11.52	2.39
							20	7.95	2.22	9.82	2.27	10.11	2.32	10.27	2.34	10.46	2.36	10.86	2.41	11.32	2.45
							21	7.95	2.25	9.70	2.30	9.99	2.34	10.16	2.37	10.35	2.39	10.76	2.43	11.23	2.48
							23	7.95	2.31	9.46	2.35	9.77	2.40	9.95	2.42	10.14	2.45	10.57	2.49	11.06	2.53
							25	7.95	2.37	9.23	2.41	9.56	2.46	9.75	2.48	9.95	2.50	10.39	2.55	10.89	2.59
							27	7.95	2.43	9.02	2.47	9.37	2.52	9.56	2.54	9.77	2.56	10.23	2.61	10.75	2.65
							29	7.95	2.49	8.82	2.54	9.18	2.58	9.39	2.60	9.60	2.63	10.08	2.67	10.61	2.71
							31	7.95	2.55	8.64	2.60	9.01	2.64	9.22	2.67	9.45	2.69	9.94	2.73	10.48	2.77
							33	7.95	2.62	8.46	2.66	8.86	2.71	9.07	2.73	9.30	2.75	9.81	2.80	10.37	2.84
							35	7.95	2.68	8.30	2.73	8.71	2.77	9.00	2.79	9.17	2.82	9.69	2.86	10.27	2.90
							37	7.95	2.75	8.15	2.80	8.58	2.84	8.81	2.86	9.06	2.89	9.59	2.93	10.19	2.97
							39	7.95	2.82	8.02	2.87	8.46	2.91	8.70	2.93	8.95	2.95	9.50	3.00	10.11	3.04
							42	7.95	2.93	7.84	2.97	8.30	3.02	8.55	3.04	8.82	3.06	9.39	3.10	10.02	3.14
							44	7.95	3.00	7.73	3.04	8.21	3.09	8.47	3.11	8.74	3.13	9.33	3.17	9.98	3.21
							46	7.95	3.07	7.64	3.12	8.13	3.16	8.40	3.19	8.68	3.21	9.29	3.25	9.95	3.29

12. Capacity Table

12-5. AJ100TXJ5KH/EA

COOLING

Combination (Capacity Index)					Combination (Total)	Combination (%)	Outdoor Temperature (°C,DB)	Indoor Temperature (°C, WB)													
								14		16		18		19		20		22		24	
								TC(kW)	PI(kW)	TC(kW)	PI(kW)	TC(kW)	PI(kW)	TC(kW)	PI(kW)	TC(kW)	PI(kW)	TC(kW)	PI(kW)	TC(kW)	PI(kW)
2000	2000	3500	6800		14300	143%	10	10.52	1.94	10.94	1.98	11.36	2.02	11.57	2.04	11.78	2.06	12.22	2.10	12.65	2.14
							12	10.34	1.99	10.76	2.03	11.18	2.07	11.39	2.09	11.60	2.11	12.04	2.15	12.47	2.20
							14	10.16	2.04	10.57	2.08	11.00	2.12	11.21	2.15	11.42	2.17	11.86	2.21	12.30	2.25
							16	9.98	2.09	10.39	2.14	10.82	2.18	11.03	2.20	11.24	2.22	11.68	2.26	12.12	2.31
							18	9.80	2.15	10.21	2.19	10.64	2.23	10.85	2.26	11.06	2.28	11.50	2.32	11.94	2.36
							20	9.62	2.21	10.03	2.25	10.46	2.29	10.67	2.31	10.89	2.33	11.32	2.38	11.76	2.42
							21	9.52	2.23	9.94	2.28	10.37	2.32	10.58	2.34	10.80	2.36	11.23	2.40	11.68	2.45
							23	9.34	2.29	9.76	2.33	10.19	2.38	10.40	2.40	10.62	2.42	11.06	2.46	11.50	2.51
							25	9.17	2.35	9.58	2.39	10.01	2.44	10.23	2.46	10.44	2.48	10.88	2.52	11.32	2.57
							27	8.99	2.41	9.41	2.45	9.83	2.50	10.05	2.52	10.26	2.54	10.70	2.58	11.15	2.63
							29	8.81	2.47	9.23	2.51	9.65	2.56	9.87	2.58	10.09	2.60	10.53	2.64	10.97	2.69
							31	8.63	2.53	9.05	2.57	9.48	2.62	9.69	2.64	9.91	2.66	10.35	2.71	10.80	2.75
							33	8.45	2.59	8.87	2.64	9.30	2.68	9.52	2.70	9.74	2.72	10.18	2.77	10.63	2.81
							35	8.27	2.65	8.70	2.70	9.13	2.74	9.36	2.76	9.56	2.79	10.00	2.83	10.45	2.88
							37	8.10	2.72	8.52	2.76	8.95	2.81	9.17	2.83	9.39	2.85	9.83	2.90	10.28	2.94
							39	7.92	2.78	8.34	2.83	8.78	2.87	8.99	2.90	9.21	2.92	9.66	2.96	10.11	3.01
							42	7.66	2.88	8.08	2.93	8.51	2.97	8.73	3.00	8.95	3.02	9.40	3.06	9.85	3.11
							44	7.48	2.95	7.91	3.00	8.34	3.04	8.56	3.06	8.78	3.09	9.23	3.13	9.68	3.18
							46	7.31	3.02	7.73	3.06	8.17	3.11	8.39	3.13	8.61	3.16	9.05	3.20	9.51	3.25
2000	2000	5000	5000		14000	140%	10	10.46	2.00	10.87	2.04	11.28	2.08	11.50	2.11	11.71	2.13	12.14	2.17	12.57	2.21
							12	10.28	2.05	10.69	2.10	11.10	2.14	11.32	2.16	11.53	2.18	11.96	2.22	12.39	2.27
							14	10.09	2.11	10.51	2.15	10.92	2.19	11.14	2.22	11.35	2.24	11.78	2.28	12.22	2.32
							16	9.91	2.16	10.33	2.21	10.75	2.25	10.96	2.27	11.17	2.29	11.60	2.34	12.04	2.38
							18	9.73	2.22	10.15	2.26	10.57	2.31	10.78	2.33	10.99	2.35	11.43	2.39	11.86	2.44
							20	9.55	2.28	9.97	2.32	10.39	2.37	10.60	2.39	10.82	2.41	11.25	2.45	11.69	2.50
							21	9.46	2.31	9.88	2.35	10.30	2.39	10.51	2.42	10.73	2.44	11.16	2.48	11.60	2.53
							23	9.28	2.37	9.70	2.41	10.12	2.45	10.34	2.48	10.55	2.50	10.99	2.54	11.43	2.59
							25	9.11	2.43	9.52	2.47	9.95	2.52	10.16	2.54	10.37	2.56	10.81	2.60	11.25	2.65
							27	8.93	2.49	9.35	2.53	9.77	2.58	9.98	2.60	10.20	2.62	10.63	2.67	11.08	2.71
							29	8.75	2.55	9.17	2.59	9.59	2.64	9.81	2.66	10.02	2.68	10.46	2.73	10.90	2.78
							31	8.57	2.61	8.99	2.66	9.42	2.70	9.63	2.73	9.85	2.75	10.29	2.79	10.73	2.84
							33	8.40	2.68	8.82	2.72	9.24	2.77	9.46	2.79	9.67	2.81	10.11	2.86	10.56	2.91
							35	8.22	2.74	8.64	2.79	9.07	2.83	9.30	2.85	9.50	2.88	9.94	2.93	10.38	2.97
							37	8.04	2.81	8.47	2.85	8.89	2.90	9.11	2.92	9.33	2.95	9.77	2.99	10.21	3.04
							39	7.87	2.87	8.29	2.92	8.72	2.97	8.94	2.99	9.15	3.01	9.59	3.06	10.04	3.11
							42	7.61	2.98	8.03	3.02	8.46	3.07	8.68	3.09	8.90	3.12	9.34	3.16	9.79	3.21
							44	7.43	3.05	7.86	3.09	8.29	3.14	8.50	3.16	8.72	3.19	9.17	3.24	9.61	3.28
							46	7.26	3.12	7.68	3.16	8.11	3.21	8.33	3.24	8.55	3.26	9.00	3.31	9.45	3.35

12. Capacity Table

12-5. AJ100TXJ5KH/EA

COOLING

Combination (Capacity Index)					Combination (Total)	Combination (%)	Outdoor Temperature (°C,DB)	Indoor Temperature (°C, WB)													
								14		16		18		19		20		22		24	
								TC(kW)	PI(kW)	TC(kW)	PI(kW)	TC(kW)	PI(kW)	TC(kW)	PI(kW)	TC(kW)	PI(kW)	TC(kW)	PI(kW)	TC(kW)	PI(kW)
2000	2000	5000	6800		15800	158%	10	11.02	2.01	11.45	2.06	11.89	2.10	12.11	2.12	12.34	2.14	12.79	2.19	13.25	2.23
							12	10.83	2.07	11.26	2.11	11.70	2.15	11.92	2.18	12.15	2.20	12.60	2.24	13.06	2.28
							14	10.64	2.12	11.07	2.17	11.51	2.21	11.74	2.23	11.96	2.25	12.41	2.30	12.87	2.34
							16	10.45	2.18	10.88	2.22	11.32	2.27	11.55	2.29	11.77	2.31	12.23	2.35	12.69	2.40
							18	10.26	2.24	10.69	2.28	11.14	2.32	11.36	2.35	11.58	2.37	12.04	2.41	12.50	2.46
							20	10.07	2.29	10.50	2.34	10.95	2.38	11.17	2.40	11.40	2.43	11.85	2.47	12.32	2.52
							21	9.97	2.32	10.41	2.37	10.85	2.41	11.08	2.43	11.30	2.46	11.76	2.50	12.22	2.55
							23	9.78	2.38	10.22	2.43	10.67	2.47	10.89	2.49	11.12	2.52	11.58	2.56	12.04	2.61
							25	9.60	2.44	10.03	2.49	10.48	2.53	10.71	2.56	10.93	2.58	11.39	2.62	11.86	2.67
							27	9.41	2.50	9.85	2.55	10.29	2.59	10.52	2.62	10.75	2.64	11.21	2.69	11.67	2.73
							29	9.22	2.57	9.66	2.61	10.11	2.66	10.33	2.68	10.56	2.70	11.02	2.75	11.49	2.79
							31	9.03	2.63	9.48	2.68	9.92	2.72	10.15	2.74	10.38	2.77	10.84	2.81	11.31	2.86
							33	8.85	2.69	9.29	2.74	9.74	2.79	9.97	2.81	10.19	2.83	10.66	2.88	11.12	2.93
							35	8.66	2.76	9.11	2.81	9.55	2.85	9.80	2.87	10.01	2.90	10.47	2.95	10.94	2.99
							37	8.48	2.83	8.92	2.87	9.37	2.92	9.60	2.94	9.83	2.97	10.29	3.01	10.76	3.06
							39	8.29	2.89	8.74	2.94	9.19	2.99	9.42	3.01	9.65	3.04	10.11	3.08	10.58	3.13
							42	8.02	3.00	8.46	3.04	8.91	3.09	9.14	3.12	9.37	3.14	9.84	3.19	10.31	3.23
							44	7.83	3.07	8.28	3.11	8.73	3.16	8.96	3.19	9.19	3.21	9.66	3.26	10.13	3.31
							46	7.65	3.14	8.10	3.19	8.55	3.23	8.78	3.26	9.01	3.28	9.48	3.33	9.95	3.38
2000	2500	2500	2500		9500	95%	10	7.76	1.84	10.95	1.89	11.15	1.93	11.28	1.95	11.42	1.98	11.73	2.02	12.11	2.06
							12	7.76	1.89	10.65	1.93	10.87	1.98	11.00	2.00	11.15	2.02	11.48	2.06	11.87	2.10
							14	7.76	1.93	10.36	1.98	10.60	2.03	10.74	2.05	10.89	2.07	11.24	2.11	11.65	2.15
							16	7.76	1.98	10.09	2.03	10.34	2.07	10.49	2.10	10.65	2.12	11.01	2.16	11.44	2.20
							18	7.76	2.03	9.83	2.08	10.10	2.12	10.25	2.15	10.42	2.17	10.80	2.21	11.23	2.25
							20	7.76	2.09	9.58	2.13	9.86	2.18	10.02	2.20	10.20	2.22	10.60	2.26	11.05	2.30
							21	7.76	2.11	9.46	2.16	9.75	2.20	9.92	2.22	10.10	2.24	10.50	2.29	10.96	2.32
							23	7.76	2.17	9.23	2.21	9.53	2.26	9.71	2.28	9.90	2.30	10.31	2.34	10.79	2.38
							25	7.76	2.22	9.01	2.27	9.33	2.31	9.51	2.33	9.71	2.35	10.14	2.39	10.63	2.43
							27	7.76	2.28	8.80	2.32	9.14	2.37	9.33	2.39	9.53	2.41	9.98	2.45	10.48	2.49
							29	7.76	2.34	8.61	2.38	8.96	2.42	9.16	2.45	9.37	2.47	9.83	2.51	10.35	2.54
							31	7.76	2.40	8.43	2.44	8.79	2.48	9.00	2.50	9.22	2.52	9.69	2.56	10.23	2.60
							33	7.76	2.46	8.26	2.50	8.64	2.54	8.85	2.56	9.08	2.59	9.57	2.62	10.12	2.66
							35	7.76	2.52	8.10	2.56	8.50	2.61	8.78	2.62	8.95	2.65	9.46	2.69	10.02	2.72
							37	7.76	2.58	7.95	2.63	8.37	2.67	8.59	2.69	8.83	2.71	9.36	2.75	9.94	2.79
							39	7.76	2.65	7.82	2.69	8.25	2.73	8.48	2.75	8.73	2.77	9.27	2.81	9.87	2.85
							42	7.76	2.75	7.64	2.79	8.09	2.83	8.34	2.85	8.60	2.87	9.16	2.91	9.78	2.95
							44	7.76	2.82	7.54	2.86	8.01	2.90	8.26	2.92	8.53	2.94	9.10	2.98	9.74	3.02
							46	7.76	2.89	7.45	2.93	7.93	2.97	8.19	2.99	8.47	3.01	9.06	3.05	9.71	3.09

12. Capacity Table

12-5. AJ100TXJ5KH/EA

COOLING

Combination (Capacity Index)					Combination (Total)	Combination (%)	Outdoor Temperature (°C,DB)	Indoor Temperature (°C, WB)													
								14		16		18		19		20		22		24	
								TC(kW)	PI(kW)	TC(kW)	PI(kW)	TC(kW)	PI(kW)	TC(kW)	PI(kW)	TC(kW)	PI(kW)	TC(kW)	PI(kW)	TC(kW)	PI(kW)
2000	2500	2500	3500		10500	105%	10	7.90	1.88	11.14	1.92	11.36	1.97	11.48	1.99	11.62	2.01	11.95	2.06	12.33	2.10
							12	7.90	1.92	10.84	1.97	11.07	2.02	11.20	2.04	11.35	2.06	11.69	2.10	12.09	2.14
							14	7.90	1.97	10.55	2.02	10.79	2.06	10.93	2.09	11.09	2.11	11.45	2.15	11.86	2.19
							16	7.90	2.02	10.27	2.07	10.53	2.11	10.68	2.14	10.84	2.16	11.22	2.20	11.64	2.24
							18	7.90	2.07	10.01	2.12	10.28	2.16	10.44	2.19	10.61	2.21	11.00	2.25	11.44	2.29
							20	7.90	2.13	9.75	2.17	10.04	2.22	10.21	2.24	10.39	2.26	10.79	2.30	11.25	2.34
							21	7.90	2.15	9.63	2.20	9.93	2.24	10.10	2.27	10.28	2.29	10.69	2.33	11.16	2.37
							23	7.90	2.21	9.40	2.25	9.71	2.30	9.88	2.32	10.08	2.34	10.50	2.38	10.98	2.42
							25	7.90	2.26	9.17	2.31	9.50	2.35	9.68	2.38	9.88	2.40	10.32	2.44	10.82	2.48
							27	7.90	2.32	8.96	2.37	9.31	2.41	9.50	2.43	9.70	2.45	10.16	2.50	10.67	2.54
							29	7.90	2.38	8.77	2.43	9.12	2.47	9.32	2.49	9.54	2.51	10.01	2.55	10.54	2.59
							31	7.90	2.44	8.58	2.49	8.95	2.53	9.16	2.55	9.38	2.57	9.87	2.61	10.41	2.65
							33	7.90	2.50	8.41	2.55	8.80	2.59	9.01	2.61	9.24	2.63	9.74	2.68	10.30	2.71
							35	7.90	2.57	8.25	2.61	8.65	2.66	8.94	2.67	9.11	2.70	9.63	2.74	10.20	2.78
							37	7.90	2.63	8.10	2.68	8.52	2.72	8.75	2.74	8.99	2.76	9.53	2.80	10.12	2.84
							39	7.90	2.70	7.96	2.74	8.40	2.79	8.64	2.81	8.89	2.83	9.44	2.87	10.05	2.91
							42	7.90	2.80	7.78	2.84	8.24	2.89	8.49	2.91	8.76	2.93	9.33	2.97	9.96	3.01
							44	7.90	2.87	7.68	2.91	8.15	2.96	8.41	2.98	8.68	3.00	9.27	3.04	9.91	3.08
							46	7.90	2.94	7.59	2.98	8.08	3.03	8.34	3.05	8.62	3.07	9.22	3.11	9.88	3.15
2000	2500	2500	5000		12000	120%	10	7.85	1.92	11.07	1.97	11.28	2.01	11.41	2.04	11.55	2.06	11.87	2.10	12.25	2.14
							12	7.85	1.97	10.77	2.01	10.99	2.06	11.13	2.08	11.28	2.11	11.61	2.15	12.01	2.19
							14	7.85	2.02	10.48	2.06	10.72	2.11	10.86	2.13	11.02	2.16	11.37	2.20	11.78	2.24
							16	7.85	2.07	10.20	2.11	10.46	2.16	10.61	2.18	10.77	2.21	11.14	2.25	11.57	2.29
							18	7.85	2.12	9.94	2.17	10.21	2.21	10.37	2.24	10.54	2.26	10.92	2.30	11.36	2.34
							20	7.85	2.17	9.69	2.22	9.97	2.27	10.14	2.29	10.32	2.31	10.72	2.35	11.17	2.39
							21	7.85	2.20	9.57	2.25	9.86	2.29	10.03	2.32	10.21	2.34	10.62	2.38	11.08	2.42
							23	7.85	2.26	9.33	2.30	9.64	2.35	9.82	2.37	10.01	2.39	10.43	2.44	10.91	2.48
							25	7.85	2.31	9.11	2.36	9.44	2.41	9.62	2.43	9.82	2.45	10.26	2.49	10.75	2.53
							27	7.85	2.37	8.90	2.42	9.24	2.47	9.43	2.49	9.64	2.51	10.09	2.55	10.60	2.59
							29	7.85	2.43	8.71	2.48	9.06	2.53	9.26	2.55	9.47	2.57	9.94	2.61	10.47	2.65
							31	7.85	2.50	8.52	2.54	8.89	2.59	9.10	2.61	9.32	2.63	9.80	2.67	10.34	2.71
							33	7.85	2.56	8.35	2.61	8.74	2.65	8.95	2.67	9.18	2.69	9.68	2.74	10.23	2.78
							35	7.85	2.62	8.19	2.67	8.59	2.71	8.88	2.73	9.05	2.76	9.57	2.80	10.14	2.84
							37	7.85	2.69	8.05	2.74	8.46	2.78	8.69	2.80	8.93	2.82	9.46	2.86	10.05	2.90
							39	7.85	2.76	7.91	2.80	8.34	2.85	8.58	2.87	8.83	2.89	9.38	2.93	9.98	2.97
							42	7.85	2.86	7.73	2.91	8.19	2.95	8.44	2.97	8.70	2.99	9.27	3.04	9.89	3.07
							44	7.85	2.93	7.63	2.98	8.10	3.02	8.35	3.04	8.62	3.07	9.21	3.11	9.85	3.14
							46	7.85	3.01	7.54	3.05	8.02	3.10	8.29	3.12	8.56	3.14	9.16	3.18	9.82	3.22

12. Capacity Table

12-5. AJ100TXJ5KH/EA

COOLING

Combination (Capacity Index)					Combination (Total)	Combination (%)	Outdoor Temperature (°C,DB)	Indoor Temperature (°C, WB)													
								14		16		18		19		20		22		24	
								TC(kW)	PI(kW)	TC(kW)	PI(kW)	TC(kW)	PI(kW)	TC(kW)	PI(kW)	TC(kW)	PI(kW)	TC(kW)	PI(kW)	TC(kW)	PI(kW)
2000	2500	2500	6800		13800	138%	10	10.41	2.00	10.82	2.04	11.24	2.08	11.45	2.11	11.66	2.13	12.08	2.17	12.52	2.21
							12	10.23	2.05	10.64	2.10	11.06	2.14	11.27	2.16	11.48	2.18	11.91	2.22	12.34	2.27
							14	10.05	2.11	10.46	2.15	10.88	2.19	11.09	2.22	11.30	2.24	11.73	2.28	12.16	2.32
							16	9.87	2.16	10.28	2.21	10.70	2.25	10.91	2.27	11.12	2.29	11.55	2.34	11.99	2.38
							18	9.69	2.22	10.10	2.26	10.52	2.31	10.73	2.33	10.95	2.35	11.38	2.39	11.81	2.44
							20	9.51	2.28	9.93	2.32	10.34	2.37	10.56	2.39	10.77	2.41	11.20	2.45	11.64	2.50
							21	9.42	2.31	9.84	2.35	10.26	2.39	10.47	2.42	10.68	2.44	11.11	2.48	11.55	2.53
							23	9.24	2.37	9.66	2.41	10.08	2.45	10.29	2.48	10.51	2.50	10.94	2.54	11.38	2.59
							25	9.07	2.43	9.48	2.47	9.90	2.52	10.12	2.54	10.33	2.56	10.76	2.60	11.20	2.65
							27	8.89	2.49	9.31	2.53	9.73	2.58	9.94	2.60	10.16	2.62	10.59	2.67	11.03	2.71
							29	8.71	2.55	9.13	2.59	9.55	2.64	9.77	2.66	9.98	2.68	10.42	2.73	10.86	2.78
							31	8.54	2.61	8.95	2.66	9.38	2.70	9.59	2.73	9.81	2.75	10.24	2.79	10.68	2.84
							33	8.36	2.68	8.78	2.72	9.20	2.77	9.42	2.79	9.63	2.81	10.07	2.86	10.51	2.91
							35	8.18	2.74	8.60	2.79	9.03	2.83	9.26	2.85	9.46	2.88	9.90	2.93	10.34	2.97
							37	8.01	2.81	8.43	2.85	8.85	2.90	9.07	2.92	9.29	2.95	9.72	2.99	10.17	3.04
							39	7.84	2.87	8.26	2.92	8.68	2.97	8.90	2.99	9.11	3.01	9.55	3.06	10.00	3.11
							42	7.57	2.98	8.00	3.02	8.42	3.07	8.64	3.09	8.86	3.12	9.30	3.16	9.74	3.21
							44	7.40	3.05	7.82	3.09	8.25	3.14	8.47	3.16	8.69	3.19	9.13	3.24	9.57	3.28
							46	7.23	3.12	7.65	3.16	8.08	3.21	8.30	3.24	8.52	3.26	8.96	3.31	9.40	3.35
2000	2500	3500	3500		11500	115%	10	7.78	1.91	10.97	1.96	11.18	2.01	11.30	2.03	11.44	2.05	11.76	2.09	12.14	2.14
							12	7.78	1.96	10.67	2.01	10.89	2.05	11.03	2.08	11.17	2.10	11.51	2.14	11.90	2.18
							14	7.78	2.01	10.39	2.06	10.62	2.10	10.76	2.13	10.92	2.15	11.27	2.19	11.67	2.23
							16	7.78	2.06	10.11	2.11	10.36	2.15	10.51	2.18	10.67	2.20	11.04	2.24	11.46	2.28
							18	7.78	2.11	9.85	2.16	10.12	2.21	10.27	2.23	10.44	2.25	10.82	2.29	11.26	2.33
							20	7.78	2.17	9.60	2.21	9.88	2.26	10.05	2.28	10.22	2.30	10.62	2.35	11.07	2.39
							21	7.78	2.19	9.48	2.24	9.77	2.29	9.94	2.31	10.12	2.33	10.52	2.37	10.98	2.41
							23	7.78	2.25	9.25	2.30	9.56	2.34	9.73	2.36	9.92	2.39	10.34	2.43	10.81	2.47
							25	7.78	2.31	9.03	2.35	9.35	2.40	9.53	2.42	9.73	2.44	10.16	2.48	10.65	2.52
							27	7.78	2.36	8.82	2.41	9.16	2.46	9.35	2.48	9.55	2.50	10.00	2.54	10.51	2.58
							29	7.78	2.43	8.63	2.47	8.98	2.52	9.18	2.54	9.39	2.56	9.85	2.60	10.37	2.64
							31	7.78	2.49	8.45	2.53	8.81	2.58	9.02	2.60	9.24	2.62	9.72	2.66	10.25	2.70
							33	7.78	2.55	8.28	2.60	8.66	2.64	8.87	2.66	9.10	2.68	9.59	2.73	10.14	2.76
							35	7.78	2.61	8.12	2.66	8.52	2.71	8.80	2.72	8.97	2.75	9.48	2.79	10.05	2.83
							37	7.78	2.68	7.97	2.73	8.39	2.77	8.61	2.79	8.85	2.81	9.38	2.85	9.96	2.89
							39	7.78	2.75	7.84	2.79	8.27	2.84	8.50	2.86	8.75	2.88	9.29	2.92	9.89	2.96
							42	7.78	2.85	7.66	2.90	8.11	2.94	8.36	2.96	8.62	2.98	9.18	3.02	9.80	3.06
							44	7.78	2.92	7.56	2.97	8.03	3.01	8.28	3.03	8.55	3.05	9.13	3.09	9.76	3.13
							46	7.78	3.00	7.47	3.04	7.95	3.08	8.21	3.11	8.49	3.13	9.08	3.17	9.73	3.20

12. Capacity Table

12-5. AJ100TXJ5KH/EA

COOLING

Combination (Capacity Index)					Combination (Total)	Combination (%)	Outdoor Temperature (°C,DB)	Indoor Temperature (°C, WB)													
								14		16		18		19		20		22		24	
								TC(kW)	PI(kW)	TC(kW)	PI(kW)	TC(kW)	PI(kW)	TC(kW)	PI(kW)	TC(kW)	PI(kW)	TC(kW)	PI(kW)	TC(kW)	PI(kW)
2000	2500	3500	5000		13000	130%	10	10.23	1.96	10.63	2.00	11.04	2.04	11.25	2.06	11.46	2.08	11.88	2.12	12.30	2.17
							12	10.05	2.01	10.46	2.05	10.87	2.09	11.07	2.12	11.28	2.14	11.70	2.18	12.13	2.22
							14	9.88	2.06	10.28	2.11	10.69	2.15	10.90	2.17	11.11	2.19	11.53	2.23	11.95	2.27
							16	9.70	2.12	10.10	2.16	10.51	2.20	10.72	2.22	10.93	2.25	11.35	2.29	11.78	2.33
							18	9.52	2.17	9.93	2.22	10.34	2.26	10.55	2.28	10.76	2.30	11.18	2.34	11.61	2.39
							20	9.35	2.23	9.75	2.27	10.17	2.32	10.37	2.34	10.58	2.36	11.01	2.40	11.44	2.45
							21	9.26	2.26	9.67	2.30	10.08	2.34	10.29	2.37	10.50	2.39	10.92	2.43	11.35	2.47
							23	9.09	2.32	9.49	2.36	9.91	2.40	10.11	2.42	10.32	2.45	10.75	2.49	11.18	2.53
							25	8.91	2.37	9.32	2.42	9.73	2.46	9.94	2.48	10.15	2.51	10.58	2.55	11.01	2.59
							27	8.74	2.43	9.14	2.48	9.56	2.52	9.77	2.54	9.98	2.57	10.41	2.61	10.84	2.65
							29	8.56	2.49	8.97	2.54	9.39	2.58	9.60	2.61	9.81	2.63	10.24	2.67	10.67	2.72
							31	8.39	2.56	8.80	2.60	9.21	2.65	9.43	2.67	9.64	2.69	10.07	2.74	10.50	2.78
							33	8.22	2.62	8.63	2.66	9.04	2.71	9.25	2.73	9.47	2.75	9.90	2.80	10.33	2.84
							35	8.04	2.68	8.45	2.73	8.87	2.77	9.10	2.79	9.30	2.82	9.73	2.86	10.16	2.91
							37	7.87	2.75	8.28	2.79	8.70	2.84	8.91	2.86	9.13	2.88	9.56	2.93	9.99	2.98
							39	7.70	2.81	8.11	2.86	8.53	2.90	8.74	2.93	8.96	2.95	9.39	3.00	9.83	3.04
							42	7.44	2.91	7.86	2.96	8.28	3.01	8.49	3.03	8.70	3.05	9.14	3.10	9.57	3.14
							44	7.27	2.98	7.69	3.03	8.11	3.07	8.32	3.10	8.54	3.12	8.97	3.17	9.41	3.21
							46	7.10	3.05	7.52	3.10	7.94	3.14	8.15	3.17	8.37	3.19	8.80	3.24	9.24	3.28
2000	2500	3500	6800		14800	148%	10	10.65	1.97	11.07	2.01	11.49	2.06	11.71	2.08	11.92	2.10	12.36	2.14	12.80	2.18
							12	10.46	2.02	10.88	2.07	11.31	2.11	11.52	2.13	11.74	2.15	12.18	2.19	12.62	2.24
							14	10.28	2.08	10.70	2.12	11.12	2.16	11.34	2.18	11.56	2.21	12.00	2.25	12.44	2.29
							16	10.09	2.13	10.52	2.18	10.94	2.22	11.16	2.24	11.38	2.26	11.82	2.30	12.26	2.35
							18	9.91	2.19	10.33	2.23	10.76	2.27	10.98	2.30	11.19	2.32	11.63	2.36	12.08	2.40
							20	9.73	2.25	10.15	2.29	10.58	2.33	10.80	2.35	11.01	2.38	11.46	2.42	11.90	2.46
							21	9.64	2.27	10.06	2.32	10.49	2.36	10.71	2.38	10.92	2.40	11.37	2.45	11.81	2.49
							23	9.45	2.33	9.88	2.38	10.31	2.42	10.53	2.44	10.74	2.46	11.19	2.51	11.63	2.55
							25	9.27	2.39	9.70	2.44	10.13	2.48	10.35	2.50	10.56	2.52	11.01	2.57	11.46	2.61
							27	9.09	2.45	9.52	2.50	9.95	2.54	10.17	2.56	10.39	2.58	10.83	2.63	11.28	2.67
							29	8.91	2.51	9.34	2.56	9.77	2.60	9.99	2.62	10.21	2.65	10.65	2.69	11.10	2.74
							31	8.73	2.57	9.16	2.62	9.59	2.66	9.81	2.69	10.03	2.71	10.47	2.75	10.93	2.80
							33	8.55	2.64	8.98	2.68	9.41	2.73	9.63	2.75	9.85	2.77	10.30	2.82	10.75	2.86
							35	8.37	2.70	8.80	2.75	9.23	2.79	9.47	2.81	9.67	2.84	10.12	2.88	10.57	2.93
							37	8.19	2.77	8.62	2.81	9.06	2.86	9.28	2.88	9.50	2.90	9.95	2.95	10.40	3.00
							39	8.01	2.83	8.44	2.88	8.88	2.93	9.10	2.95	9.32	2.97	9.77	3.02	10.23	3.06
							42	7.75	2.93	8.18	2.98	8.61	3.03	8.84	3.05	9.06	3.07	9.51	3.12	9.96	3.17
							44	7.57	3.00	8.00	3.05	8.44	3.10	8.66	3.12	8.88	3.14	9.33	3.19	9.79	3.24
							46	7.39	3.07	7.82	3.12	8.26	3.17	8.48	3.19	8.71	3.21	9.16	3.26	9.62	3.31

12. Capacity Table

12-5. AJ100TXJ5KH/EA

COOLING

Combination (Capacity Index)					Combination (Total)	Combination (%)	Outdoor Temperature (°C,DB)	Indoor Temperature (°C, WB)													
								14		16		18		19		20		22		24	
								TC(kW)	PI(kW)	TC(kW)	PI(kW)	TC(kW)	PI(kW)	TC(kW)	PI(kW)	TC(kW)	PI(kW)	TC(kW)	PI(kW)	TC(kW)	PI(kW)
2000	2500	5000	5000		14500	145%	10	10.57	1.96	10.98	2.01	11.41	2.05	11.62	2.07	11.83	2.09	12.27	2.13	12.71	2.17
							12	10.39	2.02	10.80	2.06	11.22	2.10	11.44	2.12	11.65	2.14	12.09	2.19	12.53	2.23
							14	10.20	2.07	10.62	2.11	11.04	2.16	11.26	2.18	11.47	2.20	11.91	2.24	12.35	2.28
							16	10.02	2.13	10.44	2.17	10.86	2.21	11.08	2.23	11.29	2.25	11.73	2.30	12.17	2.34
							18	9.84	2.18	10.26	2.22	10.68	2.27	10.90	2.29	11.11	2.31	11.55	2.35	11.99	2.40
							20	9.66	2.24	10.08	2.28	10.50	2.32	10.72	2.35	10.93	2.37	11.37	2.41	11.81	2.45
							21	9.57	2.27	9.99	2.31	10.41	2.35	10.63	2.37	10.84	2.40	11.28	2.44	11.73	2.48
							23	9.38	2.32	9.81	2.37	10.23	2.41	10.45	2.43	10.66	2.46	11.10	2.50	11.55	2.54
							25	9.20	2.38	9.63	2.43	10.05	2.47	10.27	2.49	10.49	2.51	10.93	2.56	11.37	2.60
							27	9.02	2.44	9.45	2.49	9.87	2.53	10.09	2.55	10.31	2.58	10.75	2.62	11.20	2.66
							29	8.84	2.50	9.27	2.55	9.70	2.59	9.91	2.62	10.13	2.64	10.57	2.68	11.02	2.73
							31	8.67	2.57	9.09	2.61	9.52	2.66	9.74	2.68	9.95	2.70	10.40	2.75	10.85	2.79
							33	8.49	2.63	8.91	2.67	9.34	2.72	9.56	2.74	9.78	2.76	10.22	2.81	10.67	2.85
							35	8.31	2.69	8.73	2.74	9.16	2.78	9.40	2.80	9.60	2.83	10.05	2.87	10.50	2.92
							37	8.13	2.76	8.56	2.80	8.99	2.85	9.21	2.87	9.43	2.89	9.87	2.94	10.32	2.99
							39	7.95	2.82	8.38	2.87	8.81	2.92	9.03	2.94	9.25	2.96	9.70	3.01	10.15	3.05
							42	7.69	2.92	8.12	2.97	8.55	3.02	8.77	3.04	8.99	3.06	9.44	3.11	9.89	3.16
							44	7.51	2.99	7.94	3.04	8.38	3.09	8.60	3.11	8.82	3.13	9.26	3.18	9.72	3.23
							46	7.34	3.06	7.77	3.11	8.20	3.16	8.42	3.18	8.64	3.20	9.09	3.25	9.55	3.30
2000	2500	5000	6800		16300	163%	10	11.02	2.01	11.45	2.06	11.89	2.10	12.11	2.12	12.34	2.14	12.79	2.19	13.25	2.23
							12	10.83	2.07	11.26	2.11	11.70	2.15	11.92	2.18	12.15	2.20	12.60	2.24	13.06	2.28
							14	10.64	2.12	11.07	2.17	11.51	2.21	11.74	2.23	11.96	2.25	12.41	2.30	12.87	2.34
							16	10.45	2.18	10.88	2.22	11.32	2.27	11.55	2.29	11.77	2.31	12.23	2.35	12.69	2.40
							18	10.26	2.24	10.69	2.28	11.14	2.32	11.36	2.35	11.58	2.37	12.04	2.41	12.50	2.46
							20	10.07	2.29	10.50	2.34	10.95	2.38	11.17	2.40	11.40	2.43	11.85	2.47	12.32	2.52
							21	9.97	2.32	10.41	2.37	10.85	2.41	11.08	2.43	11.30	2.46	11.76	2.50	12.22	2.55
							23	9.78	2.38	10.22	2.43	10.67	2.47	10.89	2.49	11.12	2.52	11.58	2.56	12.04	2.61
							25	9.60	2.44	10.03	2.49	10.48	2.53	10.71	2.56	10.93	2.58	11.39	2.62	11.86	2.67
							27	9.41	2.50	9.85	2.55	10.29	2.59	10.52	2.62	10.75	2.64	11.21	2.69	11.67	2.73
							29	9.22	2.57	9.66	2.61	10.11	2.66	10.33	2.68	10.56	2.70	11.02	2.75	11.49	2.79
							31	9.03	2.63	9.48	2.68	9.92	2.72	10.15	2.74	10.38	2.77	10.84	2.81	11.31	2.86
							33	8.85	2.69	9.29	2.74	9.74	2.79	9.97	2.81	10.19	2.83	10.66	2.88	11.12	2.93
							35	8.66	2.76	9.11	2.81	9.55	2.85	9.80	2.87	10.01	2.90	10.47	2.95	10.94	2.99
							37	8.48	2.83	8.92	2.87	9.37	2.92	9.60	2.94	9.83	2.97	10.29	3.01	10.76	3.06
							39	8.29	2.89	8.74	2.94	9.19	2.99	9.42	3.01	9.65	3.04	10.11	3.08	10.58	3.13
							42	8.02	3.00	8.46	3.04	8.91	3.09	9.14	3.12	9.37	3.14	9.84	3.19	10.31	3.23
							44	7.83	3.07	8.28	3.11	8.73	3.16	8.96	3.19	9.19	3.21	9.66	3.26	10.13	3.31
							46	7.65	3.14	8.10	3.19	8.55	3.23	8.78	3.26	9.01	3.28	9.48	3.33	9.95	3.38

12. Capacity Table

12-5. AJ100TXJ5KH/EA

COOLING

Combination (Capacity Index)					Combination (Total)	Combination (%)	Outdoor Temperature (°C,DB)	Indoor Temperature (°C, WB)													
								14		16		18		19		20		22		24	
								TC(kW)	PI(kW)	TC(kW)	PI(kW)	TC(kW)	PI(kW)	TC(kW)	PI(kW)	TC(kW)	PI(kW)	TC(kW)	PI(kW)	TC(kW)	PI(kW)
2000	3500	3500	3500		12500	125%	10	7.95	1.95	11.22	2.00	11.43	2.05	11.56	2.07	11.70	2.10	12.03	2.14	12.41	2.18
							12	7.95	2.00	10.91	2.05	11.14	2.10	11.28	2.12	11.43	2.14	11.77	2.19	12.17	2.23
							14	7.95	2.05	10.62	2.10	10.86	2.15	11.01	2.17	11.17	2.19	11.52	2.24	11.94	2.28
							16	7.95	2.10	10.34	2.15	10.60	2.20	10.75	2.22	10.92	2.25	11.29	2.29	11.72	2.33
							18	7.95	2.16	10.07	2.21	10.35	2.25	10.51	2.28	10.68	2.30	11.07	2.34	11.52	2.38
							20	7.95	2.21	9.82	2.26	10.11	2.31	10.27	2.33	10.46	2.35	10.86	2.40	11.32	2.44
							21	7.95	2.24	9.70	2.29	9.99	2.34	10.16	2.36	10.35	2.38	10.76	2.42	11.23	2.47
							23	7.95	2.30	9.46	2.35	9.77	2.39	9.95	2.42	10.14	2.44	10.57	2.48	11.06	2.52
							25	7.95	2.36	9.23	2.40	9.56	2.45	9.75	2.47	9.95	2.50	10.39	2.54	10.89	2.58
							27	7.95	2.42	9.02	2.46	9.37	2.51	9.56	2.53	9.77	2.56	10.23	2.60	10.75	2.64
							29	7.95	2.48	8.82	2.53	9.18	2.57	9.39	2.59	9.60	2.62	10.08	2.66	10.61	2.70
							31	7.95	2.54	8.64	2.59	9.01	2.63	9.22	2.66	9.45	2.68	9.94	2.72	10.48	2.76
							33	7.95	2.61	8.46	2.65	8.86	2.70	9.07	2.72	9.30	2.74	9.81	2.79	10.37	2.83
							35	7.95	2.67	8.30	2.72	8.71	2.76	9.00	2.78	9.17	2.81	9.69	2.85	10.27	2.89
							37	7.95	2.74	8.15	2.79	8.58	2.83	8.81	2.85	9.06	2.88	9.59	2.92	10.19	2.96
							39	7.95	2.81	8.02	2.86	8.46	2.90	8.70	2.92	8.95	2.94	9.50	2.99	10.11	3.03
							42	7.95	2.91	7.84	2.96	8.30	3.01	8.55	3.03	8.82	3.05	9.39	3.09	10.02	3.13
							44	7.95	2.99	7.73	3.03	8.21	3.08	8.47	3.10	8.74	3.12	9.33	3.16	9.98	3.20
							46	7.95	3.06	7.64	3.11	8.13	3.15	8.40	3.17	8.68	3.19	9.29	3.24	9.95	3.28
2000	3500	3500	5000		14000	140%	10	10.48	1.99	10.89	2.04	11.31	2.08	11.52	2.10	11.73	2.12	12.16	2.16	12.60	2.21
							12	10.30	2.05	10.71	2.09	11.13	2.13	11.34	2.15	11.55	2.17	11.98	2.22	12.42	2.26
							14	10.12	2.10	10.53	2.14	10.95	2.19	11.16	2.21	11.37	2.23	11.81	2.27	12.24	2.32
							16	9.93	2.16	10.35	2.20	10.77	2.24	10.98	2.26	11.20	2.29	11.63	2.33	12.07	2.37
							18	9.75	2.21	10.17	2.26	10.59	2.30	10.80	2.32	11.02	2.34	11.45	2.39	11.89	2.43
							20	9.57	2.27	9.99	2.31	10.41	2.36	10.62	2.38	10.84	2.40	11.27	2.45	11.71	2.49
							21	9.48	2.30	9.90	2.34	10.32	2.39	10.54	2.41	10.75	2.43	11.19	2.47	11.63	2.52
							23	9.30	2.36	9.72	2.40	10.14	2.45	10.36	2.47	10.57	2.49	11.01	2.53	11.45	2.58
							25	9.13	2.42	9.54	2.46	9.97	2.51	10.18	2.53	10.40	2.55	10.83	2.60	11.28	2.64
							27	8.95	2.48	9.37	2.52	9.79	2.57	10.00	2.59	10.22	2.61	10.66	2.66	11.10	2.70
							29	8.77	2.54	9.19	2.58	9.61	2.63	9.83	2.65	10.05	2.68	10.48	2.72	10.93	2.77
							31	8.59	2.60	9.01	2.65	9.44	2.69	9.65	2.72	9.87	2.74	10.31	2.78	10.75	2.83
							33	8.41	2.67	8.84	2.71	9.26	2.76	9.48	2.78	9.70	2.80	10.13	2.85	10.58	2.89
							35	8.24	2.73	8.66	2.78	9.09	2.82	9.32	2.84	9.52	2.87	9.96	2.92	10.41	2.96
							37	8.06	2.80	8.48	2.84	8.91	2.89	9.13	2.91	9.35	2.94	9.79	2.98	10.24	3.03
							39	7.89	2.86	8.31	2.91	8.74	2.96	8.96	2.98	9.17	3.00	9.62	3.05	10.06	3.10
							42	7.62	2.97	8.05	3.01	8.48	3.06	8.70	3.08	8.91	3.11	9.36	3.15	9.81	3.20
							44	7.45	3.03	7.87	3.08	8.30	3.13	8.52	3.15	8.74	3.18	9.19	3.22	9.64	3.27
							46	7.27	3.11	7.70	3.15	8.13	3.20	8.35	3.22	8.57	3.25	9.01	3.30	9.47	3.34

12. Capacity Table

12-5. AJ100TXJ5KH/EA

COOLING

Combination (Capacity Index)					Combination (Total)	Combination (%)	Outdoor Temperature (°C,DB)	Indoor Temperature (°C, WB)													
								14		16		18		19		20		22		24	
								TC(kW)	PI(kW)	TC(kW)	PI(kW)	TC(kW)	PI(kW)	TC(kW)	PI(kW)	TC(kW)	PI(kW)	TC(kW)	PI(kW)	TC(kW)	PI(kW)
2000	3500	3500	6800		15800	158%	10	11.02	2.01	11.45	2.05	11.89	2.09	12.11	2.11	12.34	2.14	12.79	2.18	13.25	2.22
							12	10.83	2.06	11.26	2.10	11.70	2.15	11.92	2.17	12.15	2.19	12.60	2.23	13.06	2.28
							14	10.64	2.12	11.07	2.16	11.51	2.20	11.74	2.22	11.96	2.25	12.41	2.29	12.87	2.33
							16	10.45	2.17	10.88	2.21	11.32	2.26	11.55	2.28	11.77	2.30	12.23	2.35	12.69	2.39
							18	10.26	2.23	10.69	2.27	11.14	2.32	11.36	2.34	11.58	2.36	12.04	2.40	12.50	2.45
							20	10.07	2.29	10.50	2.33	10.95	2.37	11.17	2.40	11.40	2.42	11.85	2.46	12.32	2.51
							21	9.97	2.31	10.41	2.36	10.85	2.40	11.08	2.43	11.30	2.45	11.76	2.49	12.22	2.54
							23	9.78	2.37	10.22	2.42	10.67	2.46	10.89	2.49	11.12	2.51	11.58	2.55	12.04	2.60
							25	9.60	2.43	10.03	2.48	10.48	2.52	10.71	2.55	10.93	2.57	11.39	2.61	11.86	2.66
							27	9.41	2.50	9.85	2.54	10.29	2.59	10.52	2.61	10.75	2.63	11.21	2.68	11.67	2.72
							29	9.22	2.56	9.66	2.60	10.11	2.65	10.33	2.67	10.56	2.69	11.02	2.74	11.49	2.79
							31	9.03	2.62	9.48	2.67	9.92	2.71	10.15	2.74	10.38	2.76	10.84	2.80	11.31	2.85
							33	8.85	2.69	9.29	2.73	9.74	2.78	9.97	2.80	10.19	2.82	10.66	2.87	11.12	2.92
							35	8.66	2.75	9.11	2.80	9.55	2.84	9.80	2.86	10.01	2.89	10.47	2.94	10.94	2.98
							37	8.48	2.82	8.92	2.86	9.37	2.91	9.60	2.93	9.83	2.96	10.29	3.00	10.76	3.05
							39	8.29	2.88	8.74	2.93	9.19	2.98	9.42	3.00	9.65	3.02	10.11	3.07	10.58	3.12
							42	8.02	2.99	8.46	3.03	8.91	3.08	9.14	3.10	9.37	3.13	9.84	3.18	10.31	3.22
							44	7.83	3.06	8.28	3.10	8.73	3.15	8.96	3.18	9.19	3.20	9.66	3.25	10.13	3.29
							46	7.65	3.13	8.10	3.17	8.55	3.22	8.78	3.25	9.01	3.27	9.48	3.32	9.95	3.37
2000	3500	5000	5000		15500	155%	10	11.02	2.00	11.45	2.04	11.89	2.08	12.11	2.11	12.34	2.13	12.79	2.17	13.25	2.21
							12	10.83	2.05	11.26	2.10	11.70	2.14	11.92	2.16	12.15	2.18	12.60	2.22	13.06	2.27
							14	10.64	2.11	11.07	2.15	11.51	2.19	11.74	2.22	11.96	2.24	12.41	2.28	12.87	2.32
							16	10.45	2.16	10.88	2.21	11.32	2.25	11.55	2.27	11.77	2.29	12.23	2.34	12.69	2.38
							18	10.26	2.22	10.69	2.26	11.14	2.31	11.36	2.33	11.58	2.35	12.04	2.39	12.50	2.44
							20	10.07	2.28	10.50	2.32	10.95	2.37	11.17	2.39	11.40	2.41	11.85	2.45	12.32	2.50
							21	9.97	2.31	10.41	2.35	10.85	2.39	11.08	2.42	11.30	2.44	11.76	2.48	12.22	2.53
							23	9.78	2.37	10.22	2.41	10.67	2.45	10.89	2.48	11.12	2.50	11.58	2.54	12.04	2.59
							25	9.60	2.43	10.03	2.47	10.48	2.52	10.71	2.54	10.93	2.56	11.39	2.60	11.86	2.65
							27	9.41	2.49	9.85	2.53	10.29	2.58	10.52	2.60	10.75	2.62	11.21	2.67	11.67	2.71
							29	9.22	2.55	9.66	2.59	10.11	2.64	10.33	2.66	10.56	2.68	11.02	2.73	11.49	2.78
							31	9.03	2.61	9.48	2.66	9.92	2.70	10.15	2.73	10.38	2.75	10.84	2.79	11.31	2.84
							33	8.85	2.68	9.29	2.72	9.74	2.77	9.97	2.79	10.19	2.81	10.66	2.86	11.12	2.91
							35	8.66	2.74	9.11	2.79	9.55	2.83	9.80	2.85	10.01	2.88	10.47	2.93	10.94	2.97
							37	8.48	2.81	8.92	2.85	9.37	2.90	9.60	2.92	9.83	2.95	10.29	2.99	10.76	3.04
							39	8.29	2.87	8.74	2.92	9.19	2.97	9.42	2.99	9.65	3.01	10.11	3.06	10.58	3.11
							42	8.02	2.98	8.46	3.02	8.91	3.07	9.14	3.09	9.37	3.12	9.84	3.16	10.31	3.21
							44	7.83	3.05	8.28	3.09	8.73	3.14	8.96	3.16	9.19	3.19	9.66	3.24	10.13	3.28
							46	7.65	3.12	8.10	3.16	8.55	3.21	8.78	3.24	9.01	3.26	9.48	3.31	9.95	3.35

12. Capacity Table

12-5. AJ100TXJ5KH/EA

COOLING

Combination (Capacity Index)					Combination (Total)	Combination (%)	Outdoor Temperature (°C,DB)	Indoor Temperature (°C, WB)													
								14		16		18		19		20		22		24	
								TC(kW)	PI(kW)	TC(kW)	PI(kW)	TC(kW)	PI(kW)	TC(kW)	PI(kW)	TC(kW)	PI(kW)	TC(kW)	PI(kW)	TC(kW)	PI(kW)
2000	3500	5000	6800		17300	173%	10	11.02	2.05	11.45	2.09	11.89	2.14	12.11	2.16	12.34	2.18	12.79	2.22	13.25	2.27
							12	10.83	2.10	11.26	2.15	11.70	2.19	11.92	2.21	12.15	2.24	12.60	2.28	13.06	2.32
							14	10.64	2.16	11.07	2.20	11.51	2.25	11.74	2.27	11.96	2.29	12.41	2.34	12.87	2.38
							16	10.45	2.22	10.88	2.26	11.32	2.31	11.55	2.33	11.77	2.35	12.23	2.39	12.69	2.44
							18	10.26	2.27	10.69	2.32	11.14	2.36	11.36	2.39	11.58	2.41	12.04	2.45	12.50	2.50
							20	10.07	2.33	10.50	2.38	10.95	2.42	11.17	2.45	11.40	2.47	11.85	2.51	12.32	2.56
							21	9.97	2.36	10.41	2.41	10.85	2.45	11.08	2.48	11.30	2.50	11.76	2.54	12.22	2.59
							23	9.78	2.42	10.22	2.47	10.67	2.51	10.89	2.54	11.12	2.56	11.58	2.61	12.04	2.65
							25	9.60	2.49	10.03	2.53	10.48	2.58	10.71	2.60	10.93	2.62	11.39	2.67	11.86	2.71
							27	9.41	2.55	9.85	2.59	10.29	2.64	10.52	2.66	10.75	2.69	11.21	2.73	11.67	2.78
							29	9.22	2.61	9.66	2.66	10.11	2.70	10.33	2.73	10.56	2.75	11.02	2.80	11.49	2.84
							31	9.03	2.68	9.48	2.72	9.92	2.77	10.15	2.79	10.38	2.82	10.84	2.86	11.31	2.91
							33	8.85	2.74	9.29	2.79	9.74	2.84	9.97	2.86	10.19	2.88	10.66	2.93	11.12	2.98
							35	8.66	2.81	9.11	2.86	9.55	2.90	9.80	2.92	10.01	2.95	10.47	3.00	10.94	3.04
							37	8.48	2.88	8.92	2.92	9.37	2.97	9.60	2.99	9.83	3.02	10.29	3.07	10.76	3.11
							39	8.29	2.94	8.74	2.99	9.19	3.04	9.42	3.06	9.65	3.09	10.11	3.14	10.58	3.18
							42	8.02	3.05	8.46	3.10	8.91	3.15	9.14	3.17	9.37	3.19	9.84	3.24	10.31	3.29
							44	7.83	3.12	8.28	3.17	8.73	3.22	8.96	3.24	9.19	3.27	9.66	3.31	10.13	3.36
							46	7.65	3.19	8.10	3.24	8.55	3.29	8.78	3.31	9.01	3.34	9.48	3.39	9.95	3.44
2000	5000	5000	5000		17000	170%	10	11.02	2.05	11.45	2.09	11.89	2.14	12.11	2.16	12.34	2.18	12.79	2.22	13.25	2.27
							12	10.83	2.10	11.26	2.15	11.70	2.19	11.92	2.21	12.15	2.24	12.60	2.28	13.06	2.32
							14	10.64	2.16	11.07	2.20	11.51	2.25	11.74	2.27	11.96	2.29	12.41	2.34	12.87	2.38
							16	10.45	2.22	10.88	2.26	11.32	2.31	11.55	2.33	11.77	2.35	12.23	2.39	12.69	2.44
							18	10.26	2.27	10.69	2.32	11.14	2.36	11.36	2.39	11.58	2.41	12.04	2.45	12.50	2.50
							20	10.07	2.33	10.50	2.38	10.95	2.42	11.17	2.45	11.40	2.47	11.85	2.51	12.32	2.56
							21	9.97	2.36	10.41	2.41	10.85	2.45	11.08	2.48	11.30	2.50	11.76	2.54	12.22	2.59
							23	9.78	2.42	10.22	2.47	10.67	2.51	10.89	2.54	11.12	2.56	11.58	2.61	12.04	2.65
							25	9.60	2.49	10.03	2.53	10.48	2.58	10.71	2.60	10.93	2.62	11.39	2.67	11.86	2.71
							27	9.41	2.55	9.85	2.59	10.29	2.64	10.52	2.66	10.75	2.69	11.21	2.73	11.67	2.78
							29	9.22	2.61	9.66	2.66	10.11	2.70	10.33	2.73	10.56	2.75	11.02	2.80	11.49	2.84
							31	9.03	2.68	9.48	2.72	9.92	2.77	10.15	2.79	10.38	2.82	10.84	2.86	11.31	2.91
							33	8.85	2.74	9.29	2.79	9.74	2.84	9.97	2.86	10.19	2.88	10.66	2.93	11.12	2.98
							35	8.66	2.81	9.11	2.86	9.55	2.90	9.80	2.92	10.01	2.95	10.47	3.00	10.94	3.04
							37	8.48	2.88	8.92	2.92	9.37	2.97	9.60	2.99	9.83	3.02	10.29	3.07	10.76	3.11
							39	8.29	2.94	8.74	2.99	9.19	3.04	9.42	3.06	9.65	3.09	10.11	3.14	10.58	3.18
							42	8.02	3.05	8.46	3.10	8.91	3.15	9.14	3.17	9.37	3.19	9.84	3.24	10.31	3.29
							44	7.83	3.12	8.28	3.17	8.73	3.22	8.96	3.24	9.19	3.27	9.66	3.31	10.13	3.36
							46	7.65	3.19	8.10	3.24	8.55	3.29	8.78	3.31	9.01	3.34	9.48	3.39	9.95	3.44

12. Capacity Table

12-5. AJ100TXJ5KH/EA

COOLING

Combination (Capacity Index)					Combination (Total)	Combination (%)	Outdoor Temperature (°C,DB)	Indoor Temperature (°C, WB)													
								14		16		18		19		20		22		24	
								TC(kW)	PI(kW)	TC(kW)	PI(kW)	TC(kW)	PI(kW)	TC(kW)	PI(kW)	TC(kW)	PI(kW)	TC(kW)	PI(kW)	TC(kW)	PI(kW)
2500	2500	2500	2500		10000	100%	10	7.81	1.84	11.02	1.89	11.23	1.93	11.35	1.95	11.49	1.98	11.82	2.02	12.19	2.06
							12	7.81	1.89	10.72	1.93	10.94	1.98	11.08	2.00	11.22	2.02	11.56	2.06	11.95	2.10
							14	7.81	1.93	10.43	1.98	10.67	2.03	10.81	2.05	10.97	2.07	11.32	2.11	11.73	2.15
							16	7.81	1.98	10.16	2.03	10.41	2.07	10.56	2.10	10.72	2.12	11.09	2.16	11.51	2.20
							18	7.81	2.03	9.89	2.08	10.16	2.12	10.32	2.15	10.49	2.17	10.87	2.21	11.31	2.25
							20	7.81	2.09	9.64	2.13	9.93	2.18	10.09	2.20	10.27	2.22	10.67	2.26	11.12	2.30
							21	7.81	2.11	9.52	2.16	9.82	2.20	9.98	2.22	10.16	2.24	10.57	2.29	11.03	2.32
							23	7.81	2.17	9.29	2.21	9.60	2.26	9.77	2.28	9.96	2.30	10.38	2.34	10.86	2.38
							25	7.81	2.22	9.07	2.27	9.39	2.31	9.58	2.33	9.77	2.35	10.21	2.39	10.70	2.43
							27	7.81	2.28	8.86	2.32	9.20	2.37	9.39	2.39	9.60	2.41	10.05	2.45	10.55	2.49
							29	7.81	2.34	8.67	2.38	9.02	2.42	9.22	2.45	9.43	2.47	9.90	2.51	10.42	2.54
							31	7.81	2.40	8.48	2.44	8.85	2.48	9.06	2.50	9.28	2.52	9.76	2.56	10.30	2.60
							33	7.81	2.46	8.31	2.50	8.70	2.54	8.91	2.56	9.14	2.59	9.64	2.62	10.19	2.66
							35	7.81	2.52	8.16	2.56	8.55	2.61	8.84	2.62	9.01	2.65	9.52	2.69	10.09	2.72
							37	7.81	2.58	8.01	2.63	8.42	2.67	8.65	2.69	8.89	2.71	9.42	2.75	10.01	2.79
							39	7.81	2.65	7.87	2.69	8.30	2.73	8.54	2.75	8.79	2.77	9.33	2.81	9.93	2.85
							42	7.81	2.75	7.70	2.79	8.15	2.83	8.40	2.85	8.66	2.87	9.22	2.91	9.85	2.95
							44	7.81	2.82	7.59	2.86	8.06	2.90	8.32	2.92	8.59	2.94	9.17	2.98	9.80	3.02
							46	7.81	2.89	7.50	2.93	7.99	2.97	8.25	2.99	8.53	3.01	9.12	3.05	9.77	3.09
2500	2500	2500	3500		11000	110%	10	7.70	1.88	10.86	1.92	11.06	1.97	11.19	1.99	11.32	2.01	11.64	2.06	12.01	2.10
							12	7.70	1.92	10.56	1.97	10.78	2.02	10.91	2.04	11.06	2.06	11.39	2.10	11.78	2.14
							14	7.70	1.97	10.28	2.02	10.51	2.06	10.65	2.09	10.81	2.11	11.15	2.15	11.56	2.19
							16	7.70	2.02	10.01	2.07	10.26	2.11	10.40	2.14	10.56	2.16	10.93	2.20	11.34	2.24
							18	7.70	2.07	9.75	2.12	10.01	2.16	10.17	2.19	10.34	2.21	10.71	2.25	11.15	2.29
							20	7.70	2.13	9.50	2.17	9.78	2.22	9.94	2.24	10.12	2.26	10.51	2.30	10.96	2.34
							21	7.70	2.15	9.38	2.20	9.67	2.24	9.84	2.27	10.01	2.29	10.41	2.33	10.87	2.37
							23	7.70	2.21	9.15	2.25	9.46	2.30	9.63	2.32	9.82	2.34	10.23	2.38	10.70	2.42
							25	7.70	2.26	8.94	2.31	9.26	2.35	9.44	2.38	9.63	2.40	10.06	2.44	10.54	2.48
							27	7.70	2.32	8.73	2.37	9.07	2.41	9.25	2.43	9.45	2.45	9.90	2.50	10.40	2.54
							29	7.70	2.38	8.54	2.43	8.89	2.47	9.08	2.49	9.29	2.51	9.75	2.55	10.27	2.59
							31	7.70	2.44	8.36	2.49	8.72	2.53	8.93	2.55	9.14	2.57	9.62	2.61	10.15	2.65
							33	7.70	2.50	8.19	2.55	8.57	2.59	8.78	2.61	9.00	2.63	9.49	2.68	10.04	2.71
							35	7.70	2.57	8.04	2.61	8.43	2.66	8.71	2.67	8.88	2.70	9.38	2.74	9.94	2.78
							37	7.70	2.63	7.89	2.68	8.30	2.72	8.52	2.74	8.76	2.76	9.28	2.80	9.86	2.84
							39	7.70	2.70	7.76	2.74	8.18	2.79	8.42	2.81	8.66	2.83	9.20	2.87	9.79	2.91
							42	7.70	2.80	7.58	2.84	8.03	2.89	8.27	2.91	8.53	2.93	9.09	2.97	9.70	3.01
							44	7.70	2.87	7.48	2.91	7.94	2.96	8.19	2.98	8.46	3.00	9.03	3.04	9.66	3.08
							46	7.70	2.94	7.39	2.98	7.87	3.03	8.13	3.05	8.40	3.07	8.99	3.11	9.63	3.15

12. Capacity Table

12-5. AJ100TXJ5KH/EA

COOLING

Combination (Capacity Index)					Combination (Total)	Combination (%)	Outdoor Temperature (°C,DB)	Indoor Temperature (°C, WB)													
								14		16		18		19		20		22		24	
								TC(kW)	PI(kW)	TC(kW)	PI(kW)	TC(kW)	PI(kW)	TC(kW)	PI(kW)	TC(kW)	PI(kW)	TC(kW)	PI(kW)	TC(kW)	PI(kW)
2500	2500	2500	5000		12500	125%	10	7.95	1.95	11.22	2.00	11.43	2.05	11.56	2.07	11.70	2.10	12.03	2.14	12.41	2.18
							12	7.95	2.00	10.91	2.05	11.14	2.10	11.28	2.12	11.43	2.14	11.77	2.19	12.17	2.23
							14	7.95	2.05	10.62	2.10	10.86	2.15	11.01	2.17	11.17	2.19	11.52	2.24	11.94	2.28
							16	7.95	2.10	10.34	2.15	10.60	2.20	10.75	2.22	10.92	2.25	11.29	2.29	11.72	2.33
							18	7.95	2.16	10.07	2.21	10.35	2.25	10.51	2.28	10.68	2.30	11.07	2.34	11.52	2.38
							20	7.95	2.21	9.82	2.26	10.11	2.31	10.27	2.33	10.46	2.35	10.86	2.40	11.32	2.44
							21	7.95	2.24	9.70	2.29	9.99	2.34	10.16	2.36	10.35	2.38	10.76	2.42	11.23	2.47
							23	7.95	2.30	9.46	2.35	9.77	2.39	9.95	2.42	10.14	2.44	10.57	2.48	11.06	2.52
							25	7.95	2.36	9.23	2.40	9.56	2.45	9.75	2.47	9.95	2.50	10.39	2.54	10.89	2.58
							27	7.95	2.42	9.02	2.46	9.37	2.51	9.56	2.53	9.77	2.56	10.23	2.60	10.75	2.64
							29	7.95	2.48	8.82	2.53	9.18	2.57	9.39	2.59	9.60	2.62	10.08	2.66	10.61	2.70
							31	7.95	2.54	8.64	2.59	9.01	2.63	9.22	2.66	9.45	2.68	9.94	2.72	10.48	2.76
							33	7.95	2.61	8.46	2.65	8.86	2.70	9.07	2.72	9.30	2.74	9.81	2.79	10.37	2.83
							35	7.95	2.67	8.30	2.72	8.71	2.76	9.00	2.78	9.17	2.81	9.69	2.85	10.27	2.89
							37	7.95	2.74	8.15	2.79	8.58	2.83	8.81	2.85	9.06	2.88	9.59	2.92	10.19	2.96
							39	7.95	2.81	8.02	2.86	8.46	2.90	8.70	2.92	8.95	2.94	9.50	2.99	10.11	3.03
							42	7.95	2.91	7.84	2.96	8.30	3.01	8.55	3.03	8.82	3.05	9.39	3.09	10.02	3.13
							44	7.95	2.99	7.73	3.03	8.21	3.08	8.47	3.10	8.74	3.12	9.33	3.16	9.98	3.20
							46	7.95	3.06	7.64	3.11	8.13	3.15	8.40	3.17	8.68	3.19	9.29	3.24	9.95	3.28
2500	2500	2500	6800		14300	143%	10	10.55	1.93	10.96	1.97	11.38	2.01	11.59	2.03	11.81	2.05	12.24	2.09	12.68	2.14
							12	10.36	1.98	10.78	2.02	11.20	2.06	11.41	2.08	11.63	2.11	12.06	2.15	12.50	2.19
							14	10.18	2.03	10.60	2.08	11.02	2.12	11.23	2.14	11.45	2.16	11.88	2.20	12.32	2.24
							16	10.00	2.09	10.42	2.13	10.84	2.17	11.05	2.19	11.27	2.21	11.70	2.26	12.14	2.30
							18	9.82	2.14	10.23	2.18	10.66	2.23	10.87	2.25	11.09	2.27	11.52	2.31	11.97	2.35
							20	9.64	2.20	10.05	2.24	10.48	2.28	10.69	2.30	10.91	2.32	11.35	2.37	11.79	2.41
							21	9.55	2.23	9.96	2.27	10.39	2.31	10.60	2.33	10.82	2.35	11.26	2.40	11.70	2.44
							23	9.36	2.28	9.78	2.33	10.21	2.37	10.43	2.39	10.64	2.41	11.08	2.45	11.52	2.50
							25	9.18	2.34	9.60	2.38	10.03	2.43	10.25	2.45	10.46	2.47	10.90	2.51	11.35	2.56
							27	9.00	2.40	9.43	2.44	9.85	2.49	10.07	2.51	10.29	2.53	10.73	2.57	11.17	2.62
							29	8.83	2.46	9.25	2.50	9.68	2.55	9.89	2.57	10.11	2.59	10.55	2.63	11.00	2.68
							31	8.65	2.52	9.07	2.56	9.50	2.61	9.72	2.63	9.93	2.65	10.37	2.70	10.82	2.74
							33	8.47	2.58	8.89	2.63	9.32	2.67	9.54	2.69	9.76	2.71	10.20	2.76	10.65	2.80
							35	8.29	2.64	8.72	2.69	9.15	2.73	9.38	2.75	9.58	2.78	10.03	2.82	10.47	2.87
							37	8.11	2.71	8.54	2.75	8.97	2.80	9.19	2.82	9.41	2.84	9.85	2.89	10.30	2.93
							39	7.94	2.77	8.36	2.82	8.79	2.86	9.01	2.89	9.23	2.91	9.68	2.95	10.13	3.00
							42	7.67	2.87	8.10	2.92	8.53	2.96	8.75	2.99	8.97	3.01	9.42	3.05	9.87	3.10
							44	7.50	2.94	7.92	2.98	8.36	3.03	8.58	3.05	8.80	3.08	9.24	3.12	9.70	3.17
							46	7.32	3.01	7.75	3.05	8.18	3.10	8.40	3.12	8.63	3.14	9.07	3.19	9.53	3.24

12. Capacity Table

12-5. AJ100TXJ5KH/EA

COOLING

Combination (Capacity Index)					Combination (Total)	Combination (%)	Outdoor Temperature (°C,DB)	Indoor Temperature (°C, WB)													
								14		16		18		19		20		22		24	
								TC(kW)	PI(kW)	TC(kW)	PI(kW)	TC(kW)	PI(kW)	TC(kW)	PI(kW)	TC(kW)	PI(kW)	TC(kW)	PI(kW)	TC(kW)	PI(kW)
2500	2500	3500	3500		12000	120%	10	7.87	1.91	11.09	1.96	11.30	2.01	11.43	2.03	11.57	2.05	11.90	2.09	12.28	2.14
							12	7.87	1.96	10.79	2.01	11.02	2.05	11.15	2.08	11.30	2.10	11.64	2.14	12.04	2.18
							14	7.87	2.01	10.50	2.06	10.74	2.10	10.89	2.13	11.04	2.15	11.40	2.19	11.81	2.23
							16	7.87	2.06	10.23	2.11	10.48	2.15	10.63	2.18	10.80	2.20	11.17	2.24	11.59	2.28
							18	7.87	2.11	9.96	2.16	10.23	2.21	10.39	2.23	10.56	2.25	10.95	2.29	11.39	2.33
							20	7.87	2.17	9.71	2.21	10.00	2.26	10.16	2.28	10.34	2.30	10.74	2.35	11.20	2.39
							21	7.87	2.19	9.59	2.24	9.88	2.29	10.05	2.31	10.23	2.33	10.64	2.37	11.11	2.41
							23	7.87	2.25	9.35	2.30	9.66	2.34	9.84	2.36	10.03	2.39	10.45	2.43	10.93	2.47
							25	7.87	2.31	9.13	2.35	9.46	2.40	9.64	2.42	9.84	2.44	10.28	2.48	10.77	2.52
							27	7.87	2.36	8.92	2.41	9.26	2.46	9.46	2.48	9.66	2.50	10.12	2.54	10.63	2.58
							29	7.87	2.43	8.73	2.47	9.08	2.52	9.28	2.54	9.50	2.56	9.96	2.60	10.49	2.64
							31	7.87	2.49	8.54	2.53	8.91	2.58	9.12	2.60	9.34	2.62	9.83	2.66	10.37	2.70
							33	7.87	2.55	8.37	2.60	8.76	2.64	8.97	2.66	9.20	2.68	9.70	2.73	10.26	2.76
							35	7.87	2.61	8.21	2.66	8.61	2.71	8.90	2.72	9.07	2.75	9.59	2.79	10.16	2.83
							37	7.87	2.68	8.06	2.73	8.48	2.77	8.71	2.79	8.95	2.81	9.49	2.85	10.07	2.89
							39	7.87	2.75	7.93	2.79	8.36	2.84	8.60	2.86	8.85	2.88	9.40	2.92	10.00	2.96
							42	7.87	2.85	7.75	2.90	8.20	2.94	8.45	2.96	8.72	2.98	9.29	3.02	9.91	3.06
							44	7.87	2.92	7.65	2.97	8.12	3.01	8.37	3.03	8.64	3.05	9.23	3.09	9.87	3.13
							46	7.87	3.00	7.55	3.04	8.04	3.08	8.30	3.11	8.58	3.13	9.18	3.17	9.84	3.20
2500	2500	3500	5000		13500	135%	10	10.34	1.99	10.75	2.03	11.16	2.07	11.37	2.09	11.58	2.11	12.01	2.15	12.44	2.20
							12	10.16	2.04	10.57	2.08	10.99	2.12	11.19	2.15	11.40	2.17	11.83	2.21	12.26	2.25
							14	9.99	2.09	10.39	2.14	10.81	2.18	11.02	2.20	11.23	2.22	11.65	2.26	12.09	2.31
							16	9.81	2.15	10.22	2.19	10.63	2.23	10.84	2.26	11.05	2.28	11.48	2.32	11.91	2.36
							18	9.63	2.20	10.04	2.25	10.45	2.29	10.66	2.31	10.88	2.33	11.30	2.38	11.74	2.42
							20	9.45	2.26	9.86	2.31	10.28	2.35	10.49	2.37	10.70	2.39	11.13	2.44	11.56	2.48
							21	9.36	2.29	9.77	2.33	10.19	2.38	10.40	2.40	10.61	2.42	11.04	2.47	11.48	2.51
							23	9.19	2.35	9.60	2.39	10.01	2.44	10.22	2.46	10.44	2.48	10.87	2.53	11.30	2.57
							25	9.01	2.41	9.42	2.45	9.84	2.50	10.05	2.52	10.26	2.54	10.69	2.59	11.13	2.63
							27	8.83	2.47	9.25	2.51	9.66	2.56	9.88	2.58	10.09	2.60	10.52	2.65	10.96	2.69
							29	8.66	2.53	9.07	2.58	9.49	2.62	9.70	2.64	9.92	2.67	10.35	2.71	10.79	2.76
							31	8.48	2.59	8.90	2.64	9.32	2.68	9.53	2.71	9.74	2.73	10.18	2.77	10.61	2.82
							33	8.31	2.66	8.72	2.70	9.14	2.75	9.36	2.77	9.57	2.79	10.00	2.84	10.44	2.88
							35	8.13	2.72	8.55	2.77	8.97	2.81	9.20	2.83	9.40	2.86	9.83	2.90	10.27	2.95
							37	7.96	2.79	8.37	2.83	8.80	2.88	9.01	2.90	9.23	2.93	9.66	2.97	10.10	3.02
							39	7.78	2.85	8.20	2.90	8.63	2.95	8.84	2.97	9.06	2.99	9.49	3.04	9.93	3.09
							42	7.52	2.96	7.94	3.00	8.37	3.05	8.58	3.07	8.80	3.10	9.24	3.14	9.68	3.19
							44	7.35	3.02	7.77	3.07	8.20	3.12	8.41	3.14	8.63	3.17	9.07	3.21	9.51	3.26
							46	7.18	3.09	7.60	3.14	8.03	3.19	8.24	3.21	8.46	3.24	8.90	3.28	9.34	3.33

12. Capacity Table

12-5. AJ100TXJ5KH/EA

COOLING

Combination (Capacity Index)					Combination (Total)	Combination (%)	Outdoor Temperature (°C,DB)	Indoor Temperature (°C, WB)													
								14		16		18		19		20		22		24	
								TC(kW)	PI(kW)	TC(kW)	PI(kW)	TC(kW)	PI(kW)	TC(kW)	PI(kW)	TC(kW)	PI(kW)	TC(kW)	PI(kW)	TC(kW)	PI(kW)
							10	11.02	1.97	11.45	2.01	11.89	2.06	12.11	2.08	12.34	2.10	12.79	2.14	13.25	2.18
							12	10.83	2.02	11.26	2.07	11.70	2.11	11.92	2.13	12.15	2.15	12.60	2.19	13.06	2.24
							14	10.64	2.08	11.07	2.12	11.51	2.16	11.74	2.18	11.96	2.21	12.41	2.25	12.87	2.29
							16	10.45	2.13	10.88	2.18	11.32	2.22	11.55	2.24	11.77	2.26	12.23	2.30	12.69	2.35
							18	10.26	2.19	10.69	2.23	11.14	2.27	11.36	2.30	11.58	2.32	12.04	2.36	12.50	2.40
							20	10.07	2.25	10.50	2.29	10.95	2.33	11.17	2.35	11.40	2.38	11.85	2.42	12.32	2.46
							21	9.97	2.27	10.41	2.32	10.85	2.36	11.08	2.38	11.30	2.40	11.76	2.45	12.22	2.49
							23	9.78	2.33	10.22	2.38	10.67	2.42	10.89	2.44	11.12	2.46	11.58	2.51	12.04	2.55
							25	9.60	2.39	10.03	2.44	10.48	2.48	10.71	2.50	10.93	2.52	11.39	2.57	11.86	2.61
2500	2500	3500	6800		15300	153%	27	9.41	2.45	9.85	2.50	10.29	2.54	10.52	2.56	10.75	2.58	11.21	2.63	11.67	2.67
							29	9.22	2.51	9.66	2.56	10.11	2.60	10.33	2.62	10.56	2.65	11.02	2.69	11.49	2.74
							31	9.03	2.57	9.48	2.62	9.92	2.66	10.15	2.69	10.38	2.71	10.84	2.75	11.31	2.80
							33	8.85	2.64	9.29	2.68	9.74	2.73	9.97	2.75	10.19	2.77	10.66	2.82	11.12	2.86
							35	8.66	2.70	9.11	2.75	9.55	2.79	9.80	2.81	10.01	2.84	10.47	2.88	10.94	2.93
							37	8.48	2.77	8.92	2.81	9.37	2.86	9.60	2.88	9.83	2.90	10.29	2.95	10.76	3.00
							39	8.29	2.83	8.74	2.88	9.19	2.93	9.42	2.95	9.65	2.97	10.11	3.02	10.58	3.06
							42	8.02	2.93	8.46	2.98	8.91	3.03	9.14	3.05	9.37	3.07	9.84	3.12	10.31	3.17
							44	7.83	3.00	8.28	3.05	8.73	3.10	8.96	3.12	9.19	3.14	9.66	3.19	10.13	3.24
							46	7.65	3.07	8.10	3.12	8.55	3.17	8.78	3.19	9.01	3.21	9.48	3.26	9.95	3.31
							10	11.02	1.96	11.45	2.01	11.89	2.05	12.11	2.07	12.34	2.09	12.79	2.13	13.25	2.17
							12	10.83	2.02	11.26	2.06	11.70	2.10	11.92	2.12	12.15	2.14	12.60	2.19	13.06	2.23
							14	10.64	2.07	11.07	2.11	11.51	2.16	11.74	2.18	11.96	2.20	12.41	2.24	12.87	2.28
							16	10.45	2.13	10.88	2.17	11.32	2.21	11.55	2.23	11.77	2.25	12.23	2.30	12.69	2.34
							18	10.26	2.18	10.69	2.22	11.14	2.27	11.36	2.29	11.58	2.31	12.04	2.35	12.50	2.40
							20	10.07	2.24	10.50	2.28	10.95	2.32	11.17	2.35	11.40	2.37	11.85	2.41	12.32	2.45
							21	9.97	2.27	10.41	2.31	10.85	2.35	11.08	2.37	11.30	2.40	11.76	2.44	12.22	2.48
							23	9.78	2.32	10.22	2.37	10.67	2.41	10.89	2.43	11.12	2.46	11.58	2.50	12.04	2.54
							25	9.60	2.38	10.03	2.43	10.48	2.47	10.71	2.49	10.93	2.51	11.39	2.56	11.86	2.60
2500	2500	5000	5000		15000	150%	27	9.41	2.44	9.85	2.49	10.29	2.53	10.52	2.55	10.75	2.58	11.21	2.62	11.67	2.66
							29	9.22	2.50	9.66	2.55	10.11	2.59	10.33	2.62	10.56	2.64	11.02	2.68	11.49	2.73
							31	9.03	2.57	9.48	2.61	9.92	2.66	10.15	2.68	10.38	2.70	10.84	2.75	11.31	2.79
							33	8.85	2.63	9.29	2.67	9.74	2.72	9.97	2.74	10.19	2.76	10.66	2.81	11.12	2.85
							35	8.66	2.69	9.11	2.74	9.55	2.78	9.80	2.80	10.01	2.83	10.47	2.87	10.94	2.92
							37	8.48	2.76	8.92	2.80	9.37	2.85	9.60	2.87	9.83	2.89	10.29	2.94	10.76	2.99
							39	8.29	2.82	8.74	2.87	9.19	2.92	9.42	2.94	9.65	2.96	10.11	3.01	10.58	3.05
							42	8.02	2.92	8.46	2.97	8.91	3.02	9.14	3.04	9.37	3.06	9.84	3.11	10.31	3.16
							44	7.83	2.99	8.28	3.04	8.73	3.09	8.96	3.11	9.19	3.13	9.66	3.18	10.13	3.23
							46	7.65	3.06	8.10	3.11	8.55	3.16	8.78	3.18	9.01	3.20	9.48	3.25	9.95	3.30

12. Capacity Table

12-5. AJ100TXJ5KH/EA

COOLING

Combination (Capacity Index)					Combination (Total)	Combination (%)	Outdoor Temperature (°C,DB)	Indoor Temperature (°C, WB)													
								14		16		18		19		20		22		24	
								TC(kW)	PI(kW)	TC(kW)	PI(kW)	TC(kW)	PI(kW)	TC(kW)	PI(kW)	TC(kW)	PI(kW)	TC(kW)	PI(kW)	TC(kW)	PI(kW)
2500	2500	5000	6800		16800	168%	10	11.02	2.05	11.45	2.09	11.89	2.14	12.11	2.16	12.34	2.18	12.79	2.22	13.25	2.27
							12	10.83	2.10	11.26	2.15	11.70	2.19	11.92	2.21	12.15	2.24	12.60	2.28	13.06	2.32
							14	10.64	2.16	11.07	2.20	11.51	2.25	11.74	2.27	11.96	2.29	12.41	2.34	12.87	2.38
							16	10.45	2.22	10.88	2.26	11.32	2.31	11.55	2.33	11.77	2.35	12.23	2.39	12.69	2.44
							18	10.26	2.27	10.69	2.32	11.14	2.36	11.36	2.39	11.58	2.41	12.04	2.45	12.50	2.50
							20	10.07	2.33	10.50	2.38	10.95	2.42	11.17	2.45	11.40	2.47	11.85	2.51	12.32	2.56
							21	9.97	2.36	10.41	2.41	10.85	2.45	11.08	2.48	11.30	2.50	11.76	2.54	12.22	2.59
							23	9.78	2.42	10.22	2.47	10.67	2.51	10.89	2.54	11.12	2.56	11.58	2.61	12.04	2.65
							25	9.60	2.49	10.03	2.53	10.48	2.58	10.71	2.60	10.93	2.62	11.39	2.67	11.86	2.71
							27	9.41	2.55	9.85	2.59	10.29	2.64	10.52	2.66	10.75	2.69	11.21	2.73	11.67	2.78
							29	9.22	2.61	9.66	2.66	10.11	2.70	10.33	2.73	10.56	2.75	11.02	2.80	11.49	2.84
							31	9.03	2.68	9.48	2.72	9.92	2.77	10.15	2.79	10.38	2.82	10.84	2.86	11.31	2.91
							33	8.85	2.74	9.29	2.79	9.74	2.84	9.97	2.86	10.19	2.88	10.66	2.93	11.12	2.98
							35	8.66	2.81	9.11	2.86	9.55	2.90	9.80	2.92	10.01	2.95	10.47	3.00	10.94	3.04
							37	8.48	2.88	8.92	2.92	9.37	2.97	9.60	2.99	9.83	3.02	10.29	3.07	10.76	3.11
							39	8.29	2.94	8.74	2.99	9.19	3.04	9.42	3.06	9.65	3.09	10.11	3.14	10.58	3.18
							42	8.02	3.05	8.46	3.10	8.91	3.15	9.14	3.17	9.37	3.19	9.84	3.24	10.31	3.29
							44	7.83	3.12	8.28	3.17	8.73	3.22	8.96	3.24	9.19	3.27	9.66	3.31	10.13	3.36
							46	7.65	3.19	8.10	3.24	8.55	3.29	8.78	3.31	9.01	3.34	9.48	3.39	9.95	3.44
2500	3500	3500	3500		13000	130%	10	10.23	1.95	10.63	1.99	11.04	2.03	11.25	2.05	11.46	2.08	11.88	2.12	12.30	2.16
							12	10.05	2.00	10.46	2.04	10.87	2.09	11.07	2.11	11.28	2.13	11.70	2.17	12.13	2.21
							14	9.88	2.06	10.28	2.10	10.69	2.14	10.90	2.16	11.11	2.18	11.53	2.22	11.95	2.27
							16	9.70	2.11	10.10	2.15	10.51	2.19	10.72	2.22	10.93	2.24	11.35	2.28	11.78	2.32
							18	9.52	2.17	9.93	2.21	10.34	2.25	10.55	2.27	10.76	2.29	11.18	2.34	11.61	2.38
							20	9.35	2.22	9.75	2.26	10.17	2.31	10.37	2.33	10.58	2.35	11.01	2.39	11.44	2.44
							21	9.26	2.25	9.67	2.29	10.08	2.34	10.29	2.36	10.50	2.38	10.92	2.42	11.35	2.47
							23	9.09	2.31	9.49	2.35	9.91	2.39	10.11	2.42	10.32	2.44	10.75	2.48	11.18	2.52
							25	8.91	2.37	9.32	2.41	9.73	2.45	9.94	2.48	10.15	2.50	10.58	2.54	11.01	2.58
							27	8.74	2.43	9.14	2.47	9.56	2.51	9.77	2.54	9.98	2.56	10.41	2.60	10.84	2.65
							29	8.56	2.49	8.97	2.53	9.39	2.57	9.60	2.60	9.81	2.62	10.24	2.66	10.67	2.71
							31	8.39	2.55	8.80	2.59	9.21	2.64	9.43	2.66	9.64	2.68	10.07	2.73	10.50	2.77
							33	8.22	2.61	8.63	2.65	9.04	2.70	9.25	2.72	9.47	2.74	9.90	2.79	10.33	2.83
							35	8.04	2.67	8.45	2.72	8.87	2.76	9.10	2.78	9.30	2.81	9.73	2.85	10.16	2.90
							37	7.87	2.74	8.28	2.78	8.70	2.83	8.91	2.85	9.13	2.87	9.56	2.92	9.99	2.96
							39	7.70	2.80	8.11	2.85	8.53	2.89	8.74	2.92	8.96	2.94	9.39	2.99	9.83	3.03
							42	7.44	2.90	7.86	2.95	8.28	2.99	8.49	3.02	8.70	3.04	9.14	3.09	9.57	3.13
							44	7.27	2.97	7.69	3.02	8.11	3.06	8.32	3.09	8.54	3.11	8.97	3.16	9.41	3.20
							46	7.10	3.04	7.52	3.09	7.94	3.13	8.15	3.16	8.37	3.18	8.80	3.23	9.24	3.27

12. Capacity Table

12-5. AJ100TXJ5KH/EA

COOLING

Combination (Capacity Index)					Combination (Total)	Combination (%)	Outdoor Temperature (°C,DB)	Indoor Temperature (°C, WB)													
								14		16		18		19		20		22		24	
								TC(kW)	PI(kW)	TC(kW)	PI(kW)	TC(kW)	PI(kW)	TC(kW)	PI(kW)	TC(kW)	PI(kW)	TC(kW)	PI(kW)	TC(kW)	PI(kW)
2500	3500	3500	5000		14500	145%	10	10.57	1.96	10.98	2.00	11.41	2.04	11.62	2.06	11.83	2.08	12.27	2.12	12.71	2.17
							12	10.39	2.01	10.80	2.05	11.22	2.09	11.44	2.12	11.65	2.14	12.09	2.18	12.53	2.22
							14	10.20	2.06	10.62	2.11	11.04	2.15	11.26	2.17	11.47	2.19	11.91	2.23	12.35	2.27
							16	10.02	2.12	10.44	2.16	10.86	2.20	11.08	2.22	11.29	2.25	11.73	2.29	12.17	2.33
							18	9.84	2.17	10.26	2.22	10.68	2.26	10.90	2.28	11.11	2.30	11.55	2.34	11.99	2.39
							20	9.66	2.23	10.08	2.27	10.50	2.32	10.72	2.34	10.93	2.36	11.37	2.40	11.81	2.45
							21	9.57	2.26	9.99	2.30	10.41	2.34	10.63	2.37	10.84	2.39	11.28	2.43	11.73	2.47
							23	9.38	2.32	9.81	2.36	10.23	2.40	10.45	2.42	10.66	2.45	11.10	2.49	11.55	2.53
							25	9.20	2.37	9.63	2.42	10.05	2.46	10.27	2.48	10.49	2.51	10.93	2.55	11.37	2.59
							27	9.02	2.43	9.45	2.48	9.87	2.52	10.09	2.54	10.31	2.57	10.75	2.61	11.20	2.65
							29	8.84	2.49	9.27	2.54	9.70	2.58	9.91	2.61	10.13	2.63	10.57	2.67	11.02	2.72
							31	8.67	2.56	9.09	2.60	9.52	2.65	9.74	2.67	9.95	2.69	10.40	2.74	10.85	2.78
							33	8.49	2.62	8.91	2.66	9.34	2.71	9.56	2.73	9.78	2.75	10.22	2.80	10.67	2.84
							35	8.31	2.68	8.73	2.73	9.16	2.77	9.40	2.79	9.60	2.82	10.05	2.86	10.50	2.91
							37	8.13	2.75	8.56	2.79	8.99	2.84	9.21	2.86	9.43	2.88	9.87	2.93	10.32	2.98
							39	7.95	2.81	8.38	2.86	8.81	2.90	9.03	2.93	9.25	2.95	9.70	3.00	10.15	3.04
							42	7.69	2.91	8.12	2.96	8.55	3.01	8.77	3.03	8.99	3.05	9.44	3.10	9.89	3.14
							44	7.51	2.98	7.94	3.03	8.38	3.07	8.60	3.10	8.82	3.12	9.26	3.17	9.72	3.21
							46	7.34	3.05	7.77	3.10	8.20	3.14	8.42	3.17	8.64	3.19	9.09	3.24	9.55	3.28
2500	3500	3500	6800		16300	163%	10	11.02	2.01	11.45	2.05	11.89	2.09	12.11	2.11	12.34	2.14	12.79	2.18	13.25	2.22
							12	10.83	2.06	11.26	2.10	11.70	2.15	11.92	2.17	12.15	2.19	12.60	2.23	13.06	2.28
							14	10.64	2.12	11.07	2.16	11.51	2.20	11.74	2.22	11.96	2.25	12.41	2.29	12.87	2.33
							16	10.45	2.17	10.88	2.21	11.32	2.26	11.55	2.28	11.77	2.30	12.23	2.35	12.69	2.39
							18	10.26	2.23	10.69	2.27	11.14	2.32	11.36	2.34	11.58	2.36	12.04	2.40	12.50	2.45
							20	10.07	2.29	10.50	2.33	10.95	2.37	11.17	2.40	11.40	2.42	11.85	2.46	12.32	2.51
							21	9.97	2.31	10.41	2.36	10.85	2.40	11.08	2.43	11.30	2.45	11.76	2.49	12.22	2.54
							23	9.78	2.37	10.22	2.42	10.67	2.46	10.89	2.49	11.12	2.51	11.58	2.55	12.04	2.60
							25	9.60	2.43	10.03	2.48	10.48	2.52	10.71	2.55	10.93	2.57	11.39	2.61	11.86	2.66
							27	9.41	2.50	9.85	2.54	10.29	2.59	10.52	2.61	10.75	2.63	11.21	2.68	11.67	2.72
							29	9.22	2.56	9.66	2.60	10.11	2.65	10.33	2.67	10.56	2.69	11.02	2.74	11.49	2.79
							31	9.03	2.62	9.48	2.67	9.92	2.71	10.15	2.74	10.38	2.76	10.84	2.80	11.31	2.85
							33	8.85	2.69	9.29	2.73	9.74	2.78	9.97	2.80	10.19	2.82	10.66	2.87	11.12	2.92
							35	8.66	2.75	9.11	2.80	9.55	2.84	9.80	2.86	10.01	2.89	10.47	2.94	10.94	2.98
							37	8.48	2.82	8.92	2.86	9.37	2.91	9.60	2.93	9.83	2.96	10.29	3.00	10.76	3.05
							39	8.29	2.88	8.74	2.93	9.19	2.98	9.42	3.00	9.65	3.02	10.11	3.07	10.58	3.12
							42	8.02	2.99	8.46	3.03	8.91	3.08	9.14	3.10	9.37	3.13	9.84	3.18	10.31	3.22
							44	7.83	3.06	8.28	3.10	8.73	3.15	8.96	3.18	9.19	3.20	9.66	3.25	10.13	3.29
							46	7.65	3.13	8.10	3.17	8.55	3.22	8.78	3.25	9.01	3.27	9.48	3.32	9.95	3.37

12. Capacity Table

12-5. AJ100TXJ5KH/EA

COOLING

Combination (Capacity Index)					Combination (Total)	Combination (%)	Outdoor Temperature (°C,DB)	Indoor Temperature (°C, WB)													
								14		16		18		19		20		22		24	
								TC(kW)	PI(kW)	TC(kW)	PI(kW)	TC(kW)	PI(kW)	TC(kW)	PI(kW)	TC(kW)	PI(kW)	TC(kW)	PI(kW)	TC(kW)	PI(kW)
2500	3500	5000	5000		16000	160%	10	11.02	2.00	11.45	2.04	11.89	2.08	12.11	2.11	12.34	2.13	12.79	2.17	13.25	2.21
							12	10.83	2.05	11.26	2.10	11.70	2.14	11.92	2.16	12.15	2.18	12.60	2.22	13.06	2.27
							14	10.64	2.11	11.07	2.15	11.51	2.19	11.74	2.22	11.96	2.24	12.41	2.28	12.87	2.32
							16	10.45	2.16	10.88	2.21	11.32	2.25	11.55	2.27	11.77	2.29	12.23	2.34	12.69	2.38
							18	10.26	2.22	10.69	2.26	11.14	2.31	11.36	2.33	11.58	2.35	12.04	2.39	12.50	2.44
							20	10.07	2.28	10.50	2.32	10.95	2.37	11.17	2.39	11.40	2.41	11.85	2.45	12.32	2.50
							21	9.97	2.31	10.41	2.35	10.85	2.39	11.08	2.42	11.30	2.44	11.76	2.48	12.22	2.53
							23	9.78	2.37	10.22	2.41	10.67	2.45	10.89	2.48	11.12	2.50	11.58	2.54	12.04	2.59
							25	9.60	2.43	10.03	2.47	10.48	2.52	10.71	2.54	10.93	2.56	11.39	2.60	11.86	2.65
							27	9.41	2.49	9.85	2.53	10.29	2.58	10.52	2.60	10.75	2.62	11.21	2.67	11.67	2.71
							29	9.22	2.55	9.66	2.59	10.11	2.64	10.33	2.66	10.56	2.68	11.02	2.73	11.49	2.78
							31	9.03	2.61	9.48	2.66	9.92	2.70	10.15	2.73	10.38	2.75	10.84	2.79	11.31	2.84
							33	8.85	2.68	9.29	2.72	9.74	2.77	9.97	2.79	10.19	2.81	10.66	2.86	11.12	2.91
							35	8.66	2.74	9.11	2.79	9.55	2.83	9.80	2.85	10.01	2.88	10.47	2.93	10.94	2.97
							37	8.48	2.81	8.92	2.85	9.37	2.90	9.60	2.92	9.83	2.95	10.29	2.99	10.76	3.04
							39	8.29	2.87	8.74	2.92	9.19	2.97	9.42	2.99	9.65	3.01	10.11	3.06	10.58	3.11
							42	8.02	2.98	8.46	3.02	8.91	3.07	9.14	3.09	9.37	3.12	9.84	3.16	10.31	3.21
							44	7.83	3.05	8.28	3.09	8.73	3.14	8.96	3.16	9.19	3.19	9.66	3.24	10.13	3.28
							46	7.65	3.12	8.10	3.16	8.55	3.21	8.78	3.24	9.01	3.26	9.48	3.31	9.95	3.35
3500	3500	3500	3500		14000	140%	10	10.48	1.99	10.89	2.03	11.31	2.07	11.52	2.09	11.73	2.11	12.16	2.15	12.60	2.20
							12	10.30	2.04	10.71	2.08	11.13	2.12	11.34	2.15	11.55	2.17	11.98	2.21	12.42	2.25
							14	10.12	2.09	10.53	2.14	10.95	2.18	11.16	2.20	11.37	2.22	11.81	2.26	12.24	2.31
							16	9.93	2.15	10.35	2.19	10.77	2.23	10.98	2.26	11.20	2.28	11.63	2.32	12.07	2.36
							18	9.75	2.20	10.17	2.25	10.59	2.29	10.80	2.31	11.02	2.33	11.45	2.38	11.89	2.42
							20	9.57	2.26	9.99	2.31	10.41	2.35	10.62	2.37	10.84	2.39	11.27	2.44	11.71	2.48
							21	9.48	2.29	9.90	2.33	10.32	2.38	10.54	2.40	10.75	2.42	11.19	2.47	11.63	2.51
							23	9.30	2.35	9.72	2.39	10.14	2.44	10.36	2.46	10.57	2.48	11.01	2.53	11.45	2.57
							25	9.13	2.41	9.54	2.45	9.97	2.50	10.18	2.52	10.40	2.54	10.83	2.59	11.28	2.63
							27	8.95	2.47	9.37	2.51	9.79	2.56	10.00	2.58	10.22	2.60	10.66	2.65	11.10	2.69
							29	8.77	2.53	9.19	2.58	9.61	2.62	9.83	2.64	10.05	2.67	10.48	2.71	10.93	2.76
							31	8.59	2.59	9.01	2.64	9.44	2.68	9.65	2.71	9.87	2.73	10.31	2.77	10.75	2.82
							33	8.41	2.66	8.84	2.70	9.26	2.75	9.48	2.77	9.70	2.79	10.13	2.84	10.58	2.88
							35	8.24	2.72	8.66	2.77	9.09	2.81	9.32	2.83	9.52	2.86	9.96	2.90	10.41	2.95
							37	8.06	2.79	8.48	2.83	8.91	2.88	9.13	2.90	9.35	2.93	9.79	2.97	10.24	3.02
							39	7.89	2.85	8.31	2.90	8.74	2.95	8.96	2.97	9.17	2.99	9.62	3.04	10.06	3.09
							42	7.62	2.96	8.05	3.00	8.48	3.05	8.70	3.07	8.91	3.10	9.36	3.14	9.81	3.19
							44	7.45	3.02	7.87	3.07	8.30	3.12	8.52	3.14	8.74	3.17	9.19	3.21	9.64	3.26
							46	7.27	3.09	7.70	3.14	8.13	3.19	8.35	3.21	8.57	3.24	9.01	3.28	9.47	3.33

12. Capacity Table

12-5. AJ100TXJ5KH/EA

COOLING

Combination (Capacity Index)					Combination (Total)	Combination (%)	Outdoor Temperature (°C,DB)	Indoor Temperature (°C, WB)													
								14		16		18		19		20		22		24	
								TC(kW)	PI(kW)	TC(kW)	PI(kW)	TC(kW)	PI(kW)	TC(kW)	PI(kW)	TC(kW)	PI(kW)	TC(kW)	PI(kW)	TC(kW)	PI(kW)
3500	3500	3500	5000		15500	155%	10	11.02	1.99	11.45	2.04	11.89	2.08	12.11	2.10	12.34	2.12	12.79	2.16	13.25	2.21
							12	10.83	2.05	11.26	2.09	11.70	2.13	11.92	2.15	12.15	2.17	12.60	2.22	13.06	2.26
							14	10.64	2.10	11.07	2.14	11.51	2.19	11.74	2.21	11.96	2.23	12.41	2.27	12.87	2.32
							16	10.45	2.16	10.88	2.20	11.32	2.24	11.55	2.26	11.77	2.29	12.23	2.33	12.69	2.37
							18	10.26	2.21	10.69	2.26	11.14	2.30	11.36	2.32	11.58	2.34	12.04	2.39	12.50	2.43
							20	10.07	2.27	10.50	2.31	10.95	2.36	11.17	2.38	11.40	2.40	11.85	2.45	12.32	2.49
							21	9.97	2.30	10.41	2.34	10.85	2.39	11.08	2.41	11.30	2.43	11.76	2.47	12.22	2.52
							23	9.78	2.36	10.22	2.40	10.67	2.45	10.89	2.47	11.12	2.49	11.58	2.53	12.04	2.58
							25	9.60	2.42	10.03	2.46	10.48	2.51	10.71	2.53	10.93	2.55	11.39	2.60	11.86	2.64
							27	9.41	2.48	9.85	2.52	10.29	2.57	10.52	2.59	10.75	2.61	11.21	2.66	11.67	2.70
							29	9.22	2.54	9.66	2.58	10.11	2.63	10.33	2.65	10.56	2.68	11.02	2.72	11.49	2.77
							31	9.03	2.60	9.48	2.65	9.92	2.69	10.15	2.72	10.38	2.74	10.84	2.78	11.31	2.83
							33	8.85	2.67	9.29	2.71	9.74	2.76	9.97	2.78	10.19	2.80	10.66	2.85	11.12	2.89
							35	8.66	2.73	9.11	2.78	9.55	2.82	9.80	2.84	10.01	2.87	10.47	2.92	10.94	2.96
							37	8.48	2.80	8.92	2.84	9.37	2.89	9.60	2.91	9.83	2.94	10.29	2.98	10.76	3.03
							39	8.29	2.86	8.74	2.91	9.19	2.96	9.42	2.98	9.65	3.00	10.11	3.05	10.58	3.10
							42	8.02	2.97	8.46	3.01	8.91	3.06	9.14	3.08	9.37	3.11	9.84	3.15	10.31	3.20
							44	7.83	3.03	8.28	3.08	8.73	3.13	8.96	3.15	9.19	3.18	9.66	3.22	10.13	3.27
							46	7.65	3.11	8.10	3.15	8.55	3.20	8.78	3.22	9.01	3.25	9.48	3.30	9.95	3.34
3500	3500	3500	6800		17300	173%	10	11.02	2.04	11.45	2.09	11.89	2.13	12.11	2.15	12.34	2.17	12.79	2.22	13.25	2.26
							12	10.83	2.10	11.26	2.14	11.70	2.18	11.92	2.21	12.15	2.23	12.60	2.27	13.06	2.32
							14	10.64	2.15	11.07	2.20	11.51	2.24	11.74	2.26	11.96	2.28	12.41	2.33	12.87	2.37
							16	10.45	2.21	10.88	2.25	11.32	2.30	11.55	2.32	11.77	2.34	12.23	2.39	12.69	2.43
							18	10.26	2.27	10.69	2.31	11.14	2.36	11.36	2.38	11.58	2.40	12.04	2.45	12.50	2.49
							20	10.07	2.33	10.50	2.37	10.95	2.42	11.17	2.44	11.40	2.46	11.85	2.51	12.32	2.55
							21	9.97	2.36	10.41	2.40	10.85	2.45	11.08	2.47	11.30	2.49	11.76	2.54	12.22	2.58
							23	9.78	2.42	10.22	2.46	10.67	2.51	10.89	2.53	11.12	2.55	11.58	2.60	12.04	2.64
							25	9.60	2.48	10.03	2.52	10.48	2.57	10.71	2.59	10.93	2.61	11.39	2.66	11.86	2.71
							27	9.41	2.54	9.85	2.58	10.29	2.63	10.52	2.65	10.75	2.68	11.21	2.72	11.67	2.77
							29	9.22	2.60	9.66	2.65	10.11	2.69	10.33	2.72	10.56	2.74	11.02	2.79	11.49	2.83
							31	9.03	2.67	9.48	2.71	9.92	2.76	10.15	2.78	10.38	2.81	10.84	2.85	11.31	2.90
							33	8.85	2.73	9.29	2.78	9.74	2.83	9.97	2.85	10.19	2.87	10.66	2.92	11.12	2.97
							35	8.66	2.80	9.11	2.85	9.55	2.89	9.80	2.91	10.01	2.94	10.47	2.99	10.94	3.03
							37	8.48	2.87	8.92	2.91	9.37	2.96	9.60	2.98	9.83	3.01	10.29	3.06	10.76	3.10
							39	8.29	2.93	8.74	2.98	9.19	3.03	9.42	3.05	9.65	3.08	10.11	3.13	10.58	3.17
							42	8.02	3.04	8.46	3.09	8.91	3.14	9.14	3.16	9.37	3.18	9.84	3.23	10.31	3.28
							44	7.83	3.11	8.28	3.16	8.73	3.21	8.96	3.23	9.19	3.26	9.66	3.30	10.13	3.35
							46	7.65	3.18	8.10	3.23	8.55	3.28	8.78	3.30	9.01	3.33	9.48	3.38	9.95	3.43

12. Capacity Table

12-5. AJ100TXJ5KH/EA

COOLING

Combination (Capacity Index)					Combination (Total)	Combination (%)	Outdoor Temperature (°C,DB)	Indoor Temperature (°C, WB)													
								14		16		18		19		20		22		24	
								TC(kW)	PI(kW)	TC(kW)	PI(kW)	TC(kW)	PI(kW)	TC(kW)	PI(kW)	TC(kW)	PI(kW)	TC(kW)	PI(kW)	TC(kW)	PI(kW)
3500	3500	5000	5000		17000	170%	10	11.02	2.04	11.45	2.09	11.89	2.13	12.11	2.15	12.34	2.17	12.79	2.22	13.25	2.26
							12	10.83	2.10	11.26	2.14	11.70	2.18	11.92	2.21	12.15	2.23	12.60	2.27	13.06	2.32
							14	10.64	2.15	11.07	2.20	11.51	2.24	11.74	2.26	11.96	2.28	12.41	2.33	12.87	2.37
							16	10.45	2.21	10.88	2.25	11.32	2.30	11.55	2.32	11.77	2.34	12.23	2.39	12.69	2.43
							18	10.26	2.27	10.69	2.31	11.14	2.36	11.36	2.38	11.58	2.40	12.04	2.45	12.50	2.49
							20	10.07	2.33	10.50	2.37	10.95	2.42	11.17	2.44	11.40	2.46	11.85	2.51	12.32	2.55
							21	9.97	2.36	10.41	2.40	10.85	2.45	11.08	2.47	11.30	2.49	11.76	2.54	12.22	2.58
							23	9.78	2.42	10.22	2.46	10.67	2.51	10.89	2.53	11.12	2.55	11.58	2.60	12.04	2.64
							25	9.60	2.48	10.03	2.52	10.48	2.57	10.71	2.59	10.93	2.61	11.39	2.66	11.86	2.71
							27	9.41	2.54	9.85	2.58	10.29	2.63	10.52	2.65	10.75	2.68	11.21	2.72	11.67	2.77
							29	9.22	2.60	9.66	2.65	10.11	2.69	10.33	2.72	10.56	2.74	11.02	2.79	11.49	2.83
							31	9.03	2.67	9.48	2.71	9.92	2.76	10.15	2.78	10.38	2.81	10.84	2.85	11.31	2.90
							33	8.85	2.73	9.29	2.78	9.74	2.83	9.97	2.85	10.19	2.87	10.66	2.92	11.12	2.97
							35	8.66	2.80	9.11	2.85	9.55	2.89	9.80	2.91	10.01	2.94	10.47	2.99	10.94	3.03
							37	8.48	2.87	8.92	2.91	9.37	2.96	9.60	2.98	9.83	3.01	10.29	3.06	10.76	3.10
							39	8.29	2.93	8.74	2.98	9.19	3.03	9.42	3.05	9.65	3.08	10.11	3.13	10.58	3.17
							42	8.02	3.04	8.46	3.09	8.91	3.14	9.14	3.16	9.37	3.18	9.84	3.23	10.31	3.28
							44	7.83	3.11	8.28	3.16	8.73	3.21	8.96	3.23	9.19	3.26	9.66	3.30	10.13	3.35
							46	7.65	3.18	8.10	3.23	8.55	3.28	8.78	3.30	9.01	3.33	9.48	3.38	9.95	3.43
2000	2000	2000	2000	2000	10000	100%	10	8.40	1.86	11.84	1.91	12.07	1.95	12.20	1.98	12.35	2.00	12.70	2.04	13.10	2.08
							12	8.40	1.91	11.52	1.96	11.76	2.00	11.90	2.02	12.06	2.04	12.42	2.09	12.85	2.13
							14	8.40	1.96	11.21	2.00	11.47	2.05	11.62	2.07	11.79	2.09	12.16	2.13	12.60	2.17
							16	8.40	2.01	10.92	2.05	11.19	2.10	11.35	2.12	11.52	2.14	11.92	2.18	12.37	2.22
							18	8.40	2.06	10.63	2.10	10.92	2.15	11.09	2.17	11.27	2.19	11.68	2.23	12.16	2.27
							20	8.40	2.11	10.36	2.16	10.67	2.20	10.85	2.22	11.04	2.24	11.46	2.28	11.95	2.32
							21	8.40	2.14	10.23	2.18	10.55	2.23	10.73	2.25	10.92	2.27	11.36	2.31	11.86	2.35
							23	8.40	2.19	9.98	2.24	10.32	2.28	10.50	2.30	10.71	2.32	11.16	2.36	11.67	2.40
							25	8.40	2.25	9.75	2.29	10.10	2.34	10.29	2.36	10.50	2.38	10.97	2.42	11.50	2.46
							27	8.40	2.30	9.52	2.35	9.89	2.39	10.09	2.41	10.31	2.44	10.80	2.48	11.34	2.52
							29	8.40	2.36	9.31	2.41	9.69	2.45	9.91	2.47	10.14	2.49	10.64	2.53	11.20	2.57
							31	8.40	2.42	9.12	2.47	9.51	2.51	9.74	2.53	9.97	2.55	10.49	2.59	11.07	2.63
							33	8.40	2.48	8.93	2.53	9.35	2.57	9.58	2.59	9.82	2.61	10.35	2.66	10.95	2.69
							35	8.40	2.55	8.76	2.59	9.19	2.64	9.50	2.65	9.68	2.68	10.23	2.72	10.84	2.76
							37	8.40	2.61	8.61	2.66	9.05	2.70	9.30	2.72	9.56	2.74	10.13	2.78	10.75	2.82
							39	8.40	2.68	8.46	2.72	8.92	2.76	9.18	2.79	9.45	2.81	10.03	2.85	10.67	2.88
							42	8.40	2.78	8.27	2.82	8.76	2.87	9.02	2.89	9.31	2.91	9.91	2.95	10.58	2.98
							44	8.40	2.85	8.16	2.89	8.66	2.93	8.94	2.96	9.23	2.98	9.85	3.01	10.54	3.05
							46	8.40	2.92	8.06	2.96	8.58	3.00	8.86	3.03	9.16	3.05	9.80	3.08	10.50	3.12

12. Capacity Table

12-5. AJ100TXJ5KH/EA

COOLING

Combination (Capacity Index)					Combination (Total)	Combination (%)	Outdoor Temperature (°C,DB)	Indoor Temperature (°C, WB)													
								14		16		18		19		20		22		24	
								TC(kW)	PI(kW)	TC(kW)	PI(kW)	TC(kW)	PI(kW)	TC(kW)	PI(kW)	TC(kW)	PI(kW)	TC(kW)	PI(kW)	TC(kW)	PI(kW)
2000	2000	2000	2000	2500	10500	105%	10	8.44	1.90	11.91	1.94	12.13	1.99	12.27	2.01	12.42	2.04	12.76	2.08	13.17	2.12
							12	8.44	1.94	11.58	1.99	11.82	2.04	11.97	2.06	12.13	2.08	12.49	2.13	12.91	2.17
							14	8.44	1.99	11.27	2.04	11.53	2.09	11.68	2.11	11.85	2.13	12.23	2.17	12.67	2.22
							16	8.44	2.04	10.97	2.09	11.25	2.14	11.41	2.16	11.58	2.18	11.98	2.22	12.44	2.27
							18	8.44	2.10	10.69	2.14	10.98	2.19	11.15	2.21	11.33	2.23	11.75	2.28	12.22	2.32
							20	8.44	2.15	10.42	2.20	10.73	2.24	10.90	2.26	11.09	2.29	11.52	2.33	12.02	2.37
							21	8.44	2.18	10.29	2.22	10.60	2.27	10.78	2.29	10.98	2.31	11.42	2.35	11.92	2.40
							23	8.44	2.23	10.04	2.28	10.37	2.32	10.56	2.35	10.76	2.37	11.22	2.41	11.73	2.45
							25	8.44	2.29	9.80	2.34	10.15	2.38	10.35	2.40	10.56	2.42	11.03	2.47	11.56	2.51
							27	8.44	2.35	9.57	2.39	9.94	2.44	10.15	2.46	10.37	2.48	10.85	2.52	11.40	2.56
							29	8.44	2.41	9.36	2.45	9.75	2.50	9.96	2.52	10.19	2.54	10.69	2.58	11.26	2.62
							31	8.44	2.47	9.17	2.51	9.56	2.56	9.79	2.58	10.02	2.60	10.54	2.64	11.13	2.68
							33	8.44	2.53	8.98	2.58	9.40	2.62	9.63	2.64	9.87	2.66	10.41	2.71	11.01	2.74
							35	8.44	2.60	8.81	2.64	9.24	2.69	9.55	2.70	9.73	2.73	10.29	2.77	10.90	2.81
							37	8.44	2.66	8.65	2.71	9.10	2.75	9.35	2.77	9.61	2.79	10.18	2.83	10.81	2.87
							39	8.44	2.73	8.51	2.77	8.97	2.82	9.23	2.84	9.50	2.86	10.08	2.90	10.73	2.94
							42	8.44	2.83	8.32	2.88	8.80	2.92	9.07	2.94	9.35	2.96	9.97	3.00	10.64	3.04
							44	8.44	2.90	8.20	2.95	8.71	2.99	8.98	3.01	9.28	3.03	9.90	3.07	10.59	3.11
							46	8.44	2.97	8.11	3.02	8.63	3.06	8.91	3.08	9.21	3.10	9.85	3.14	10.56	3.18
2000	2000	2000	2000	3500	11500	115%	10	8.54	1.93	12.04	1.98	12.27	2.03	12.41	2.05	12.56	2.07	12.91	2.12	13.32	2.16
							12	8.54	1.98	11.71	2.03	11.96	2.08	12.10	2.10	12.27	2.12	12.63	2.17	13.06	2.21
							14	8.54	2.03	11.40	2.08	11.66	2.13	11.82	2.15	11.98	2.17	12.37	2.21	12.82	2.26
							16	8.54	2.08	11.10	2.13	11.38	2.18	11.54	2.20	11.72	2.22	12.12	2.27	12.58	2.31
							18	8.54	2.13	10.81	2.18	11.11	2.23	11.28	2.25	11.46	2.27	11.88	2.32	12.36	2.36
							20	8.54	2.19	10.54	2.24	10.85	2.28	11.03	2.31	11.22	2.33	11.66	2.37	12.15	2.41
							21	8.54	2.22	10.41	2.26	10.73	2.31	10.91	2.33	11.11	2.36	11.55	2.40	12.05	2.44
							23	8.54	2.27	10.15	2.32	10.49	2.37	10.68	2.39	10.89	2.41	11.35	2.45	11.87	2.50
							25	8.54	2.33	9.91	2.38	10.27	2.42	10.46	2.45	10.68	2.47	11.16	2.51	11.69	2.55
							27	8.54	2.39	9.69	2.44	10.05	2.48	10.26	2.51	10.49	2.53	10.98	2.57	11.53	2.61
							29	8.54	2.45	9.47	2.50	9.86	2.54	10.07	2.57	10.31	2.59	10.82	2.63	11.39	2.67
							31	8.54	2.51	9.27	2.56	9.67	2.61	9.90	2.63	10.14	2.65	10.67	2.69	11.25	2.73
							33	8.54	2.58	9.08	2.62	9.50	2.67	9.74	2.69	9.99	2.71	10.53	2.76	11.13	2.80
							35	8.54	2.64	8.91	2.69	9.35	2.73	9.66	2.75	9.85	2.78	10.41	2.82	11.03	2.86
							37	8.54	2.71	8.75	2.76	9.20	2.80	9.45	2.82	9.72	2.84	10.30	2.89	10.93	2.93
							39	8.54	2.78	8.61	2.82	9.08	2.87	9.33	2.89	9.61	2.91	10.20	2.95	10.85	2.99
							42	8.54	2.88	8.41	2.93	8.91	2.97	9.18	3.00	9.46	3.02	10.08	3.06	10.76	3.10
							44	8.54	2.96	8.30	3.00	8.81	3.05	9.09	3.07	9.38	3.09	10.02	3.13	10.71	3.17
							46	8.54	3.03	8.20	3.07	8.73	3.12	9.01	3.14	9.32	3.16	9.97	3.20	10.68	3.24

12. Capacity Table

12-5. AJ100TXJ5KH/EA

COOLING

Combination (Capacity Index)					Combination (Total)	Combination (%)	Outdoor Temperature (°C,DB)	Indoor Temperature (°C, WB)													
								14		16		18		19		20		22		24	
								TC(kW)	PI(kW)	TC(kW)	PI(kW)	TC(kW)	PI(kW)	TC(kW)	PI(kW)	TC(kW)	PI(kW)	TC(kW)	PI(kW)	TC(kW)	PI(kW)
2000	2000	2000	2000	5000	13000	130%	10	11.24	1.97	11.69	2.01	12.13	2.06	12.36	2.08	12.59	2.10	13.05	2.14	13.52	2.18
							12	11.05	2.02	11.49	2.07	11.94	2.11	12.17	2.13	12.40	2.15	12.86	2.19	13.33	2.24
							14	10.85	2.08	11.30	2.12	11.75	2.16	11.97	2.18	12.20	2.21	12.67	2.25	13.14	2.29
							16	10.66	2.13	11.10	2.18	11.55	2.22	11.78	2.24	12.01	2.26	12.48	2.30	12.95	2.35
							18	10.47	2.19	10.91	2.23	11.36	2.27	11.59	2.30	11.82	2.32	12.29	2.36	12.76	2.40
							20	10.27	2.25	10.72	2.29	11.17	2.33	11.40	2.35	11.63	2.38	12.10	2.42	12.57	2.46
							21	10.18	2.27	10.62	2.32	11.08	2.36	11.30	2.38	11.54	2.40	12.00	2.45	12.47	2.49
							23	9.98	2.33	10.43	2.38	10.88	2.42	11.11	2.44	11.35	2.46	11.81	2.51	12.29	2.55
							25	9.79	2.39	10.24	2.44	10.69	2.48	10.92	2.50	11.16	2.52	11.62	2.57	12.10	2.61
							27	9.60	2.45	10.05	2.50	10.50	2.54	10.73	2.56	10.97	2.58	11.44	2.63	11.91	2.67
							29	9.41	2.51	9.86	2.56	10.32	2.60	10.55	2.62	10.78	2.65	11.25	2.69	11.72	2.74
							31	9.22	2.57	9.67	2.62	10.13	2.66	10.36	2.69	10.59	2.71	11.06	2.75	11.54	2.80
							33	9.03	2.64	9.48	2.68	9.94	2.73	10.17	2.75	10.40	2.77	10.87	2.82	11.35	2.86
							35	8.84	2.70	9.29	2.75	9.75	2.79	10.00	2.81	10.22	2.84	10.69	2.88	11.17	2.93
							37	8.65	2.77	9.10	2.81	9.56	2.86	9.79	2.88	10.03	2.90	10.50	2.95	10.98	3.00
							39	8.46	2.83	8.92	2.88	9.38	2.93	9.61	2.95	9.84	2.97	10.32	3.02	10.80	3.06
							42	8.18	2.93	8.63	2.98	9.10	3.03	9.33	3.05	9.56	3.07	10.04	3.12	10.52	3.17
							44	7.99	3.00	8.45	3.05	8.91	3.10	9.14	3.12	9.38	3.14	9.86	3.19	10.34	3.24
							46	7.80	3.07	8.26	3.12	8.73	3.17	8.96	3.19	9.20	3.21	9.67	3.26	10.16	3.31
2000	2000	2000	2000	6800	14800	148%	10	11.24	1.99	11.69	2.03	12.13	2.07	12.36	2.09	12.59	2.11	13.05	2.15	13.52	2.20
							12	11.05	2.04	11.49	2.08	11.94	2.12	12.17	2.15	12.40	2.17	12.86	2.21	13.33	2.25
							14	10.85	2.09	11.30	2.14	11.75	2.18	11.97	2.20	12.20	2.22	12.67	2.26	13.14	2.31
							16	10.66	2.15	11.10	2.19	11.55	2.23	11.78	2.26	12.01	2.28	12.48	2.32	12.95	2.36
							18	10.47	2.20	10.91	2.25	11.36	2.29	11.59	2.31	11.82	2.33	12.29	2.38	12.76	2.42
							20	10.27	2.26	10.72	2.31	11.17	2.35	11.40	2.37	11.63	2.39	12.10	2.44	12.57	2.48
							21	10.18	2.29	10.62	2.33	11.08	2.38	11.30	2.40	11.54	2.42	12.00	2.47	12.47	2.51
							23	9.98	2.35	10.43	2.39	10.88	2.44	11.11	2.46	11.35	2.48	11.81	2.53	12.29	2.57
							25	9.79	2.41	10.24	2.45	10.69	2.50	10.92	2.52	11.16	2.54	11.62	2.59	12.10	2.63
							27	9.60	2.47	10.05	2.51	10.50	2.56	10.73	2.58	10.97	2.60	11.44	2.65	11.91	2.69
							29	9.41	2.53	9.86	2.58	10.32	2.62	10.55	2.64	10.78	2.67	11.25	2.71	11.72	2.76
							31	9.22	2.59	9.67	2.64	10.13	2.68	10.36	2.71	10.59	2.73	11.06	2.77	11.54	2.82
							33	9.03	2.66	9.48	2.70	9.94	2.75	10.17	2.77	10.40	2.79	10.87	2.84	11.35	2.88
							35	8.84	2.72	9.29	2.77	9.75	2.81	10.00	2.83	10.22	2.86	10.69	2.90	11.17	2.95
							37	8.65	2.79	9.10	2.83	9.56	2.88	9.79	2.90	10.03	2.93	10.50	2.97	10.98	3.02
							39	8.46	2.85	8.92	2.90	9.38	2.95	9.61	2.97	9.84	2.99	10.32	3.04	10.80	3.09
							42	8.18	2.96	8.63	3.00	9.10	3.05	9.33	3.07	9.56	3.10	10.04	3.14	10.52	3.19
							44	7.99	3.02	8.45	3.07	8.91	3.12	9.14	3.14	9.38	3.17	9.86	3.21	10.34	3.26
							46	7.80	3.09	8.26	3.14	8.73	3.19	8.96	3.21	9.20	3.24	9.67	3.28	10.16	3.33

12. Capacity Table

12-5. AJ100TXJ5KH/EA

COOLING

Combination (Capacity Index)					Combination (Total)	Combination (%)	Outdoor Temperature (°C,DB)	Indoor Temperature (°C, WB)													
								14		16		18		19		20		22		24	
								TC(kW)	PI(kW)	TC(kW)	PI(kW)	TC(kW)	PI(kW)	TC(kW)	PI(kW)	TC(kW)	PI(kW)	TC(kW)	PI(kW)	TC(kW)	PI(kW)
2000	2000	2000	2500	2500	11000	110%	10	8.49	1.90	11.98	1.94	12.21	1.99	12.34	2.01	12.49	2.04	12.84	2.08	13.26	2.12
							12	8.49	1.94	11.65	1.99	11.90	2.04	12.04	2.06	12.20	2.08	12.57	2.13	13.00	2.17
							14	8.49	1.99	11.34	2.04	11.60	2.09	11.75	2.11	11.92	2.13	12.31	2.17	12.75	2.22
							16	8.49	2.04	11.04	2.09	11.32	2.14	11.48	2.16	11.66	2.18	12.06	2.22	12.52	2.27
							18	8.49	2.10	10.76	2.14	11.05	2.19	11.22	2.21	11.40	2.23	11.82	2.28	12.30	2.32
							20	8.49	2.15	10.48	2.20	10.79	2.24	10.97	2.26	11.16	2.29	11.60	2.33	12.09	2.37
							21	8.49	2.18	10.35	2.22	10.67	2.27	10.85	2.29	11.05	2.31	11.49	2.35	11.99	2.40
							23	8.49	2.23	10.10	2.28	10.43	2.32	10.62	2.35	10.83	2.37	11.29	2.41	11.81	2.45
							25	8.49	2.29	9.86	2.34	10.21	2.38	10.41	2.40	10.62	2.42	11.10	2.47	11.63	2.51
							27	8.49	2.35	9.64	2.39	10.00	2.44	10.21	2.46	10.43	2.48	10.92	2.52	11.47	2.56
							29	8.49	2.41	9.42	2.45	9.81	2.50	10.02	2.52	10.25	2.54	10.76	2.58	11.33	2.62
							31	8.49	2.47	9.22	2.51	9.62	2.56	9.85	2.58	10.09	2.60	10.61	2.64	11.20	2.68
							33	8.49	2.53	9.04	2.58	9.46	2.62	9.69	2.64	9.93	2.66	10.47	2.71	11.08	2.74
							35	8.49	2.60	8.87	2.64	9.30	2.69	9.61	2.70	9.79	2.73	10.35	2.77	10.97	2.81
							37	8.49	2.66	8.71	2.71	9.16	2.75	9.41	2.77	9.67	2.79	10.24	2.83	10.88	2.87
							39	8.49	2.73	8.56	2.77	9.03	2.82	9.28	2.84	9.56	2.86	10.15	2.90	10.80	2.94
							42	8.49	2.83	8.37	2.88	8.86	2.92	9.13	2.94	9.41	2.96	10.03	3.00	10.70	3.04
							44	8.49	2.90	8.26	2.95	8.76	2.99	9.04	3.01	9.33	3.03	9.97	3.07	10.66	3.11
							46	8.49	2.97	8.16	3.02	8.68	3.06	8.97	3.08	9.27	3.10	9.92	3.14	10.63	3.18
2000	2000	2000	2500	3500	12000	120%	10	8.58	1.93	12.10	1.98	12.33	2.03	12.47	2.05	12.62	2.07	12.98	2.12	13.39	2.16
							12	8.58	1.98	11.78	2.03	12.02	2.08	12.17	2.10	12.33	2.12	12.70	2.17	13.13	2.21
							14	8.58	2.03	11.46	2.08	11.72	2.13	11.88	2.15	12.05	2.17	12.43	2.21	12.88	2.26
							16	8.58	2.08	11.16	2.13	11.44	2.18	11.60	2.20	11.78	2.22	12.18	2.27	12.65	2.31
							18	8.58	2.13	10.87	2.18	11.16	2.23	11.34	2.25	11.52	2.27	11.94	2.32	12.42	2.36
							20	8.58	2.19	10.59	2.24	10.91	2.28	11.09	2.31	11.28	2.33	11.72	2.37	12.22	2.41
							21	8.58	2.22	10.46	2.26	10.78	2.31	10.97	2.33	11.16	2.36	11.61	2.40	12.12	2.44
							23	8.58	2.27	10.21	2.32	10.54	2.37	10.74	2.39	10.94	2.41	11.41	2.45	11.93	2.50
							25	8.58	2.33	9.96	2.38	10.32	2.42	10.52	2.45	10.73	2.47	11.21	2.51	11.75	2.55
							27	8.58	2.39	9.74	2.44	10.11	2.48	10.32	2.51	10.54	2.53	11.04	2.57	11.59	2.61
							29	8.58	2.45	9.52	2.50	9.91	2.54	10.13	2.57	10.36	2.59	10.87	2.63	11.45	2.67
							31	8.58	2.51	9.32	2.56	9.72	2.61	9.95	2.63	10.19	2.65	10.72	2.69	11.31	2.73
							33	8.58	2.58	9.13	2.62	9.55	2.67	9.79	2.69	10.04	2.71	10.58	2.76	11.19	2.80
							35	8.58	2.64	8.96	2.69	9.40	2.73	9.71	2.75	9.90	2.78	10.46	2.82	11.08	2.86
							37	8.58	2.71	8.80	2.76	9.25	2.80	9.50	2.82	9.77	2.84	10.35	2.89	10.99	2.93
							39	8.58	2.78	8.65	2.82	9.12	2.87	9.38	2.89	9.66	2.91	10.25	2.95	10.91	2.99
							42	8.58	2.88	8.45	2.93	8.95	2.97	9.22	3.00	9.51	3.02	10.13	3.06	10.82	3.10
							44	8.58	2.96	8.34	3.00	8.86	3.05	9.14	3.07	9.43	3.09	10.07	3.13	10.77	3.17
							46	8.58	3.03	8.24	3.07	8.77	3.12	9.06	3.14	9.36	3.16	10.02	3.20	10.74	3.24

12. Capacity Table

12-5. AJ100TXJ5KH/EA

COOLING

Combination (Capacity Index)					Combination (Total)	Combination (%)	Outdoor Temperature (°C,DB)	Indoor Temperature (°C, WB)													
								14		16		18		19		20		22		24	
								TC(kW)	PI(kW)	TC(kW)	PI(kW)	TC(kW)	PI(kW)	TC(kW)	PI(kW)	TC(kW)	PI(kW)	TC(kW)	PI(kW)	TC(kW)	PI(kW)
2000	2000	2000	2500	5000	13500	135%	10	11.24	2.01	11.69	2.05	12.13	2.09	12.36	2.11	12.59	2.14	13.05	2.18	13.52	2.22
							12	11.05	2.06	11.49	2.10	11.94	2.15	12.17	2.17	12.40	2.19	12.86	2.23	13.33	2.28
							14	10.85	2.12	11.30	2.16	11.75	2.20	11.97	2.22	12.20	2.25	12.67	2.29	13.14	2.33
							16	10.66	2.17	11.10	2.21	11.55	2.26	11.78	2.28	12.01	2.30	12.48	2.35	12.95	2.39
							18	10.47	2.23	10.91	2.27	11.36	2.32	11.59	2.34	11.82	2.36	12.29	2.40	12.76	2.45
							20	10.27	2.29	10.72	2.33	11.17	2.37	11.40	2.40	11.63	2.42	12.10	2.46	12.57	2.51
							21	10.18	2.31	10.62	2.36	11.08	2.40	11.30	2.43	11.54	2.45	12.00	2.49	12.47	2.54
							23	9.98	2.37	10.43	2.42	10.88	2.46	11.11	2.49	11.35	2.51	11.81	2.55	12.29	2.60
							25	9.79	2.43	10.24	2.48	10.69	2.52	10.92	2.55	11.16	2.57	11.62	2.61	12.10	2.66
							27	9.60	2.50	10.05	2.54	10.50	2.59	10.73	2.61	10.97	2.63	11.44	2.68	11.91	2.72
							29	9.41	2.56	9.86	2.60	10.32	2.65	10.55	2.67	10.78	2.69	11.25	2.74	11.72	2.79
							31	9.22	2.62	9.67	2.67	10.13	2.71	10.36	2.74	10.59	2.76	11.06	2.80	11.54	2.85
							33	9.03	2.69	9.48	2.73	9.94	2.78	10.17	2.80	10.40	2.82	10.87	2.87	11.35	2.92
							35	8.84	2.75	9.29	2.80	9.75	2.84	10.00	2.86	10.22	2.89	10.69	2.94	11.17	2.98
							37	8.65	2.82	9.10	2.86	9.56	2.91	9.79	2.93	10.03	2.96	10.50	3.00	10.98	3.05
							39	8.46	2.88	8.92	2.93	9.38	2.98	9.61	3.00	9.84	3.02	10.32	3.07	10.80	3.12
							42	8.18	2.99	8.63	3.03	9.10	3.08	9.33	3.10	9.56	3.13	10.04	3.18	10.52	3.22
							44	7.99	3.06	8.45	3.10	8.91	3.15	9.14	3.18	9.38	3.20	9.86	3.25	10.34	3.29
							46	7.80	3.13	8.26	3.17	8.73	3.22	8.96	3.25	9.20	3.27	9.67	3.32	10.16	3.37
2000	2000	2000	2500	6800	15300	153%	10	11.24	1.99	11.69	2.03	12.13	2.07	12.36	2.09	12.59	2.11	13.05	2.15	13.52	2.20
							12	11.05	2.04	11.49	2.08	11.94	2.12	12.17	2.15	12.40	2.17	12.86	2.21	13.33	2.25
							14	10.85	2.09	11.30	2.14	11.75	2.18	11.97	2.20	12.20	2.22	12.67	2.26	13.14	2.31
							16	10.66	2.15	11.10	2.19	11.55	2.23	11.78	2.26	12.01	2.28	12.48	2.32	12.95	2.36
							18	10.47	2.20	10.91	2.25	11.36	2.29	11.59	2.31	11.82	2.33	12.29	2.38	12.76	2.42
							20	10.27	2.26	10.72	2.31	11.17	2.35	11.40	2.37	11.63	2.39	12.10	2.44	12.57	2.48
							21	10.18	2.29	10.62	2.33	11.08	2.38	11.30	2.40	11.54	2.42	12.00	2.47	12.47	2.51
							23	9.98	2.35	10.43	2.39	10.88	2.44	11.11	2.46	11.35	2.48	11.81	2.53	12.29	2.57
							25	9.79	2.41	10.24	2.45	10.69	2.50	10.92	2.52	11.16	2.54	11.62	2.59	12.10	2.63
							27	9.60	2.47	10.05	2.51	10.50	2.56	10.73	2.58	10.97	2.60	11.44	2.65	11.91	2.69
							29	9.41	2.53	9.86	2.58	10.32	2.62	10.55	2.64	10.78	2.67	11.25	2.71	11.72	2.76
							31	9.22	2.59	9.67	2.64	10.13	2.68	10.36	2.71	10.59	2.73	11.06	2.77	11.54	2.82
							33	9.03	2.66	9.48	2.70	9.94	2.75	10.17	2.77	10.40	2.79	10.87	2.84	11.35	2.88
							35	8.84	2.72	9.29	2.77	9.75	2.81	10.00	2.83	10.22	2.86	10.69	2.90	11.17	2.95
							37	8.65	2.79	9.10	2.83	9.56	2.88	9.79	2.90	10.03	2.93	10.50	2.97	10.98	3.02
							39	8.46	2.85	8.92	2.90	9.38	2.95	9.61	2.97	9.84	2.99	10.32	3.04	10.80	3.09
							42	8.18	2.96	8.63	3.00	9.10	3.05	9.33	3.07	9.56	3.10	10.04	3.14	10.52	3.19
							44	7.99	3.02	8.45	3.07	8.91	3.12	9.14	3.14	9.38	3.17	9.86	3.21	10.34	3.26
							46	7.80	3.09	8.26	3.14	8.73	3.19	8.96	3.21	9.20	3.24	9.67	3.28	10.16	3.33

12. Capacity Table

12-5. AJ100TXJ5KH/EA

COOLING

Combination (Capacity Index)					Combination (Total)	Combination (%)	Outdoor Temperature (°C,DB)	Indoor Temperature (°C, WB)													
								14		16		18		19		20		22		24	
								TC(kW)	PI(kW)	TC(kW)	PI(kW)	TC(kW)	PI(kW)	TC(kW)	PI(kW)	TC(kW)	PI(kW)	TC(kW)	PI(kW)	TC(kW)	PI(kW)
2000	2000	2000	3500	3500	13000	130%	10	11.24	1.96	11.69	2.01	12.13	2.05	12.36	2.07	12.59	2.09	13.05	2.13	13.52	2.17
							12	11.05	2.02	11.49	2.06	11.94	2.10	12.17	2.12	12.40	2.14	12.86	2.19	13.33	2.23
							14	10.85	2.07	11.30	2.11	11.75	2.16	11.97	2.18	12.20	2.20	12.67	2.24	13.14	2.28
							16	10.66	2.13	11.10	2.17	11.55	2.21	11.78	2.23	12.01	2.25	12.48	2.30	12.95	2.34
							18	10.47	2.18	10.91	2.22	11.36	2.27	11.59	2.29	11.82	2.31	12.29	2.35	12.76	2.40
							20	10.27	2.24	10.72	2.28	11.17	2.32	11.40	2.35	11.63	2.37	12.10	2.41	12.57	2.45
							21	10.18	2.27	10.62	2.31	11.08	2.35	11.30	2.37	11.54	2.40	12.00	2.44	12.47	2.48
							23	9.98	2.32	10.43	2.37	10.88	2.41	11.11	2.43	11.35	2.46	11.81	2.50	12.29	2.54
							25	9.79	2.38	10.24	2.43	10.69	2.47	10.92	2.49	11.16	2.51	11.62	2.56	12.10	2.60
							27	9.60	2.44	10.05	2.49	10.50	2.53	10.73	2.55	10.97	2.58	11.44	2.62	11.91	2.66
							29	9.41	2.50	9.86	2.55	10.32	2.59	10.55	2.62	10.78	2.64	11.25	2.68	11.72	2.73
							31	9.22	2.57	9.67	2.61	10.13	2.66	10.36	2.68	10.59	2.70	11.06	2.75	11.54	2.79
							33	9.03	2.63	9.48	2.67	9.94	2.72	10.17	2.74	10.40	2.76	10.87	2.81	11.35	2.85
							35	8.84	2.69	9.29	2.74	9.75	2.78	10.00	2.80	10.22	2.83	10.69	2.87	11.17	2.92
							37	8.65	2.76	9.10	2.80	9.56	2.85	9.79	2.87	10.03	2.89	10.50	2.94	10.98	2.99
							39	8.46	2.82	8.92	2.87	9.38	2.92	9.61	2.94	9.84	2.96	10.32	3.01	10.80	3.05
							42	8.18	2.92	8.63	2.97	9.10	3.02	9.33	3.04	9.56	3.06	10.04	3.11	10.52	3.16
							44	7.99	2.99	8.45	3.04	8.91	3.09	9.14	3.11	9.38	3.13	9.86	3.18	10.34	3.23
							46	7.80	3.06	8.26	3.11	8.73	3.16	8.96	3.18	9.20	3.20	9.67	3.25	10.16	3.30
2000	2000	2000	3500	5000	14500	145%	10	11.24	1.98	11.69	2.02	12.13	2.06	12.36	2.08	12.59	2.11	13.05	2.15	13.52	2.19
							12	11.05	2.03	11.49	2.07	11.94	2.12	12.17	2.14	12.40	2.16	12.86	2.20	13.33	2.24
							14	10.85	2.09	11.30	2.13	11.75	2.17	11.97	2.19	12.20	2.21	12.67	2.26	13.14	2.30
							16	10.66	2.14	11.10	2.18	11.55	2.23	11.78	2.25	12.01	2.27	12.48	2.31	12.95	2.36
							18	10.47	2.20	10.91	2.24	11.36	2.28	11.59	2.30	11.82	2.33	12.29	2.37	12.76	2.41
							20	10.27	2.25	10.72	2.30	11.17	2.34	11.40	2.36	11.63	2.38	12.10	2.43	12.57	2.47
							21	10.18	2.28	10.62	2.33	11.08	2.37	11.30	2.39	11.54	2.41	12.00	2.46	12.47	2.50
							23	9.98	2.34	10.43	2.38	10.88	2.43	11.11	2.45	11.35	2.47	11.81	2.52	12.29	2.56
							25	9.79	2.40	10.24	2.44	10.69	2.49	10.92	2.51	11.16	2.53	11.62	2.58	12.10	2.62
							27	9.60	2.46	10.05	2.50	10.50	2.55	10.73	2.57	10.97	2.59	11.44	2.64	11.91	2.68
							29	9.41	2.52	9.86	2.57	10.32	2.61	10.55	2.63	10.78	2.66	11.25	2.70	11.72	2.75
							31	9.22	2.58	9.67	2.63	10.13	2.67	10.36	2.70	10.59	2.72	11.06	2.76	11.54	2.81
							33	9.03	2.65	9.48	2.69	9.94	2.74	10.17	2.76	10.40	2.78	10.87	2.83	11.35	2.87
							35	8.84	2.71	9.29	2.76	9.75	2.80	10.00	2.82	10.22	2.85	10.69	2.89	11.17	2.94
							37	8.65	2.78	9.10	2.82	9.56	2.87	9.79	2.89	10.03	2.92	10.50	2.96	10.98	3.01
							39	8.46	2.84	8.92	2.89	9.38	2.94	9.61	2.96	9.84	2.98	10.32	3.03	10.80	3.07
							42	8.18	2.94	8.63	2.99	9.10	3.04	9.33	3.06	9.56	3.08	10.04	3.13	10.52	3.18
							44	7.99	3.01	8.45	3.06	8.91	3.11	9.14	3.13	9.38	3.15	9.86	3.20	10.34	3.25
							46	7.80	3.08	8.26	3.13	8.73	3.18	8.96	3.20	9.20	3.22	9.67	3.27	10.16	3.32

12. Capacity Table

12-5. AJ100TXJ5KH/EA

COOLING

Combination (Capacity Index)					Combination (Total)	Combination (%)	Outdoor Temperature (°C,DB)	Indoor Temperature (°C, WB)													
								14		16		18		19		20		22		24	
								TC(kW)	PI(kW)	TC(kW)	PI(kW)	TC(kW)	PI(kW)	TC(kW)	PI(kW)	TC(kW)	PI(kW)	TC(kW)	PI(kW)	TC(kW)	PI(kW)
2000	2000	2000	3500	6800	16300	163%	10	11.24	2.02	11.69	2.06	12.13	2.11	12.36	2.13	12.59	2.15	13.05	2.19	13.52	2.24
							12	11.05	2.07	11.49	2.12	11.94	2.16	12.17	2.18	12.40	2.20	12.86	2.25	13.33	2.29
							14	10.85	2.13	11.30	2.17	11.75	2.22	11.97	2.24	12.20	2.26	12.67	2.30	13.14	2.35
							16	10.66	2.19	11.10	2.23	11.55	2.27	11.78	2.30	12.01	2.32	12.48	2.36	12.95	2.41
							18	10.47	2.24	10.91	2.29	11.36	2.33	11.59	2.35	11.82	2.38	12.29	2.42	12.76	2.46
							20	10.27	2.30	10.72	2.35	11.17	2.39	11.40	2.41	11.63	2.43	12.10	2.48	12.57	2.52
							21	10.18	2.33	10.62	2.38	11.08	2.42	11.30	2.44	11.54	2.46	12.00	2.51	12.47	2.55
							23	9.98	2.39	10.43	2.44	10.88	2.48	11.11	2.50	11.35	2.53	11.81	2.57	12.29	2.62
							25	9.79	2.45	10.24	2.50	10.69	2.54	10.92	2.56	11.16	2.59	11.62	2.63	12.10	2.68
							27	9.60	2.51	10.05	2.56	10.50	2.60	10.73	2.63	10.97	2.65	11.44	2.69	11.91	2.74
							29	9.41	2.58	9.86	2.62	10.32	2.67	10.55	2.69	10.78	2.71	11.25	2.76	11.72	2.80
							31	9.22	2.64	9.67	2.69	10.13	2.73	10.36	2.75	10.59	2.78	11.06	2.82	11.54	2.87
							33	9.03	2.70	9.48	2.75	9.94	2.80	10.17	2.82	10.40	2.84	10.87	2.89	11.35	2.94
							35	8.84	2.77	9.29	2.82	9.75	2.86	10.00	2.88	10.22	2.91	10.69	2.96	11.17	3.00
							37	8.65	2.84	9.10	2.88	9.56	2.93	9.79	2.95	10.03	2.98	10.50	3.02	10.98	3.07
							39	8.46	2.90	8.92	2.95	9.38	3.00	9.61	3.02	9.84	3.05	10.32	3.09	10.80	3.14
							42	8.18	3.01	8.63	3.06	9.10	3.10	9.33	3.13	9.56	3.15	10.04	3.20	10.52	3.25
							44	7.99	3.08	8.45	3.13	8.91	3.17	9.14	3.20	9.38	3.22	9.86	3.27	10.34	3.32
							46	7.80	3.15	8.26	3.20	8.73	3.25	8.96	3.27	9.20	3.29	9.67	3.34	10.16	3.39
2000	2000	2000	5000	5000	16000	160%	10	11.24	2.02	11.69	2.06	12.13	2.11	12.36	2.13	12.59	2.15	13.05	2.19	13.52	2.24
							12	11.05	2.07	11.49	2.12	11.94	2.16	12.17	2.18	12.40	2.20	12.86	2.25	13.33	2.29
							14	10.85	2.13	11.30	2.17	11.75	2.22	11.97	2.24	12.20	2.26	12.67	2.30	13.14	2.35
							16	10.66	2.19	11.10	2.23	11.55	2.27	11.78	2.30	12.01	2.32	12.48	2.36	12.95	2.41
							18	10.47	2.24	10.91	2.29	11.36	2.33	11.59	2.35	11.82	2.38	12.29	2.42	12.76	2.46
							20	10.27	2.30	10.72	2.35	11.17	2.39	11.40	2.41	11.63	2.43	12.10	2.48	12.57	2.52
							21	10.18	2.33	10.62	2.38	11.08	2.42	11.30	2.44	11.54	2.46	12.00	2.51	12.47	2.55
							23	9.98	2.39	10.43	2.44	10.88	2.48	11.11	2.50	11.35	2.53	11.81	2.57	12.29	2.62
							25	9.79	2.45	10.24	2.50	10.69	2.54	10.92	2.56	11.16	2.59	11.62	2.63	12.10	2.68
							27	9.60	2.51	10.05	2.56	10.50	2.60	10.73	2.63	10.97	2.65	11.44	2.69	11.91	2.74
							29	9.41	2.58	9.86	2.62	10.32	2.67	10.55	2.69	10.78	2.71	11.25	2.76	11.72	2.80
							31	9.22	2.64	9.67	2.69	10.13	2.73	10.36	2.75	10.59	2.78	11.06	2.82	11.54	2.87
							33	9.03	2.70	9.48	2.75	9.94	2.80	10.17	2.82	10.40	2.84	10.87	2.89	11.35	2.94
							35	8.84	2.77	9.29	2.82	9.75	2.86	10.00	2.88	10.22	2.91	10.69	2.96	11.17	3.00
							37	8.65	2.84	9.10	2.88	9.56	2.93	9.79	2.95	10.03	2.98	10.50	3.02	10.98	3.07
							39	8.46	2.90	8.92	2.95	9.38	3.00	9.61	3.02	9.84	3.05	10.32	3.09	10.80	3.14
							42	8.18	3.01	8.63	3.06	9.10	3.10	9.33	3.13	9.56	3.15	10.04	3.20	10.52	3.25
							44	7.99	3.08	8.45	3.13	8.91	3.17	9.14	3.20	9.38	3.22	9.86	3.27	10.34	3.32
							46	7.80	3.15	8.26	3.20	8.73	3.25	8.96	3.27	9.20	3.29	9.67	3.34	10.16	3.39

12. Capacity Table

12-5. AJ100TXJ5KH/EA

COOLING

Combination (Capacity Index)					Combination (Total)	Combination (%)	Outdoor Temperature (°C,DB)	Indoor Temperature (°C, WB)													
								14		16		18		19		20		22		24	
								TC(kW)	PI(kW)	TC(kW)	PI(kW)	TC(kW)	PI(kW)	TC(kW)	PI(kW)	TC(kW)	PI(kW)	TC(kW)	PI(kW)	TC(kW)	PI(kW)
2000	2000	2500	2500	2500	11500	115%	10	8.54	1.92	12.04	1.97	12.27	2.02	12.41	2.04	12.56	2.07	12.91	2.11	13.32	2.15
							12	8.54	1.97	11.71	2.02	11.96	2.07	12.10	2.09	12.27	2.11	12.63	2.16	13.06	2.20
							14	8.54	2.02	11.40	2.07	11.66	2.12	11.82	2.14	11.98	2.16	12.37	2.21	12.82	2.25
							16	8.54	2.07	11.10	2.12	11.38	2.17	11.54	2.19	11.72	2.21	12.12	2.26	12.58	2.30
							18	8.54	2.13	10.81	2.17	11.11	2.22	11.28	2.24	11.46	2.27	11.88	2.31	12.36	2.35
							20	8.54	2.18	10.54	2.23	10.85	2.28	11.03	2.30	11.22	2.32	11.66	2.36	12.15	2.40
							21	8.54	2.21	10.41	2.26	10.73	2.30	10.91	2.32	11.11	2.35	11.55	2.39	12.05	2.43
							23	8.54	2.27	10.15	2.31	10.49	2.36	10.68	2.38	10.89	2.40	11.35	2.45	11.87	2.49
							25	8.54	2.32	9.91	2.37	10.27	2.42	10.46	2.44	10.68	2.46	11.16	2.50	11.69	2.54
							27	8.54	2.38	9.69	2.43	10.05	2.47	10.26	2.50	10.49	2.52	10.98	2.56	11.53	2.60
							29	8.54	2.44	9.47	2.49	9.86	2.54	10.07	2.56	10.31	2.58	10.82	2.62	11.39	2.66
							31	8.54	2.51	9.27	2.55	9.67	2.60	9.90	2.62	10.14	2.64	10.67	2.68	11.25	2.72
							33	8.54	2.57	9.08	2.62	9.50	2.66	9.74	2.68	9.99	2.70	10.53	2.75	11.13	2.79
							35	8.54	2.63	8.91	2.68	9.35	2.72	9.66	2.74	9.85	2.77	10.41	2.81	11.03	2.85
							37	8.54	2.70	8.75	2.75	9.20	2.79	9.45	2.81	9.72	2.83	10.30	2.88	10.93	2.91
							39	8.54	2.77	8.61	2.81	9.08	2.86	9.33	2.88	9.61	2.90	10.20	2.94	10.85	2.98
							42	8.54	2.87	8.41	2.92	8.91	2.96	9.18	2.98	9.46	3.01	10.08	3.05	10.76	3.09
							44	8.54	2.94	8.30	2.99	8.81	3.03	9.09	3.06	9.38	3.08	10.02	3.12	10.71	3.16
							46	8.54	3.02	8.20	3.06	8.73	3.11	9.01	3.13	9.32	3.15	9.97	3.19	10.68	3.23
2000	2000	2500	2500	3500	12500	125%	10	8.84	1.97	12.47	2.02	12.70	2.06	12.84	2.09	13.00	2.11	13.37	2.16	13.79	2.20
							12	8.84	2.02	12.13	2.07	12.38	2.11	12.53	2.14	12.70	2.16	13.08	2.20	13.52	2.25
							14	8.84	2.07	11.80	2.12	12.07	2.16	12.23	2.19	12.41	2.21	12.80	2.25	13.27	2.30
							16	8.84	2.12	11.49	2.17	11.78	2.22	11.95	2.24	12.13	2.26	12.54	2.31	13.02	2.35
							18	8.84	2.17	11.19	2.22	11.50	2.27	11.67	2.29	11.87	2.32	12.30	2.36	12.80	2.40
							20	8.84	2.23	10.91	2.28	11.23	2.32	11.42	2.35	11.62	2.37	12.07	2.41	12.58	2.46
							21	8.84	2.26	10.77	2.31	11.10	2.35	11.29	2.38	11.50	2.40	11.96	2.44	12.48	2.48
							23	8.84	2.31	10.51	2.36	10.86	2.41	11.06	2.43	11.27	2.46	11.75	2.50	12.29	2.54
							25	8.84	2.37	10.26	2.42	10.63	2.47	10.83	2.49	11.06	2.51	11.55	2.56	12.11	2.60
							27	8.84	2.43	10.03	2.48	10.41	2.53	10.62	2.55	10.86	2.57	11.37	2.62	11.94	2.66
							29	8.84	2.50	9.81	2.54	10.20	2.59	10.43	2.61	10.67	2.64	11.20	2.68	11.79	2.72
							31	8.84	2.56	9.60	2.61	10.02	2.65	10.25	2.68	10.50	2.70	11.04	2.74	11.65	2.78
							33	8.84	2.62	9.40	2.67	9.84	2.72	10.08	2.74	10.34	2.76	10.90	2.81	11.53	2.85
							35	8.84	2.69	9.23	2.74	9.68	2.78	10.00	2.80	10.19	2.83	10.77	2.87	11.41	2.91
							37	8.84	2.76	9.06	2.81	9.53	2.85	9.79	2.87	10.06	2.90	10.66	2.94	11.32	2.98
							39	8.84	2.83	8.91	2.88	9.39	2.92	9.66	2.94	9.94	2.96	10.56	3.01	11.24	3.05
							42	8.84	2.94	8.71	2.98	9.22	3.03	9.50	3.05	9.80	3.07	10.43	3.11	11.14	3.15
							44	8.84	3.01	8.59	3.06	9.12	3.10	9.41	3.12	9.71	3.14	10.37	3.19	11.09	3.23
							46	8.84	3.08	8.49	3.13	9.03	3.17	9.33	3.20	9.64	3.22	10.32	3.26	11.06	3.30

12. Capacity Table

12-5. AJ100TXJ5KH/EA

COOLING

Combination (Capacity Index)					Combination (Total)	Combination (%)	Outdoor Temperature (°C,DB)	Indoor Temperature (°C, WB)													
								14		16		18		19		20		22		24	
								TC(kW)	PI(kW)	TC(kW)	PI(kW)	TC(kW)	PI(kW)	TC(kW)	PI(kW)	TC(kW)	PI(kW)	TC(kW)	PI(kW)	TC(kW)	PI(kW)
2000	2000	2500	2500	5000	14000	140%	10	11.24	2.01	11.69	2.05	12.13	2.09	12.36	2.11	12.59	2.14	13.05	2.18	13.52	2.22
							12	11.05	2.06	11.49	2.10	11.94	2.15	12.17	2.17	12.40	2.19	12.86	2.23	13.33	2.28
							14	10.85	2.12	11.30	2.16	11.75	2.20	11.97	2.22	12.20	2.25	12.67	2.29	13.14	2.33
							16	10.66	2.17	11.10	2.21	11.55	2.26	11.78	2.28	12.01	2.30	12.48	2.35	12.95	2.39
							18	10.47	2.23	10.91	2.27	11.36	2.32	11.59	2.34	11.82	2.36	12.29	2.40	12.76	2.45
							20	10.27	2.29	10.72	2.33	11.17	2.37	11.40	2.40	11.63	2.42	12.10	2.46	12.57	2.51
							21	10.18	2.31	10.62	2.36	11.08	2.40	11.30	2.43	11.54	2.45	12.00	2.49	12.47	2.54
							23	9.98	2.37	10.43	2.42	10.88	2.46	11.11	2.49	11.35	2.51	11.81	2.55	12.29	2.60
							25	9.79	2.43	10.24	2.48	10.69	2.52	10.92	2.55	11.16	2.57	11.62	2.61	12.10	2.66
							27	9.60	2.50	10.05	2.54	10.50	2.59	10.73	2.61	10.97	2.63	11.44	2.68	11.91	2.72
							29	9.41	2.56	9.86	2.60	10.32	2.65	10.55	2.67	10.78	2.69	11.25	2.74	11.72	2.79
							31	9.22	2.62	9.67	2.67	10.13	2.71	10.36	2.74	10.59	2.76	11.06	2.80	11.54	2.85
							33	9.03	2.69	9.48	2.73	9.94	2.78	10.17	2.80	10.40	2.82	10.87	2.87	11.35	2.92
							35	8.84	2.75	9.29	2.80	9.75	2.84	10.00	2.86	10.22	2.89	10.69	2.94	11.17	2.98
							37	8.65	2.82	9.10	2.86	9.56	2.91	9.79	2.93	10.03	2.96	10.50	3.00	10.98	3.05
							39	8.46	2.88	8.92	2.93	9.38	2.98	9.61	3.00	9.84	3.02	10.32	3.07	10.80	3.12
							42	8.18	2.99	8.63	3.03	9.10	3.08	9.33	3.10	9.56	3.13	10.04	3.18	10.52	3.22
							44	7.99	3.06	8.45	3.10	8.91	3.15	9.14	3.18	9.38	3.20	9.86	3.25	10.34	3.29
							46	7.80	3.13	8.26	3.17	8.73	3.22	8.96	3.25	9.20	3.27	9.67	3.32	10.16	3.37
2000	2000	2500	2500	6800	15800	158%	10	11.24	2.02	11.69	2.06	12.13	2.11	12.36	2.13	12.59	2.15	13.05	2.19	13.52	2.24
							12	11.05	2.07	11.49	2.12	11.94	2.16	12.17	2.18	12.40	2.20	12.86	2.25	13.33	2.29
							14	10.85	2.13	11.30	2.17	11.75	2.22	11.97	2.24	12.20	2.26	12.67	2.30	13.14	2.35
							16	10.66	2.19	11.10	2.23	11.55	2.27	11.78	2.30	12.01	2.32	12.48	2.36	12.95	2.41
							18	10.47	2.24	10.91	2.29	11.36	2.33	11.59	2.35	11.82	2.38	12.29	2.42	12.76	2.46
							20	10.27	2.30	10.72	2.35	11.17	2.39	11.40	2.41	11.63	2.43	12.10	2.48	12.57	2.52
							21	10.18	2.33	10.62	2.38	11.08	2.42	11.30	2.44	11.54	2.46	12.00	2.51	12.47	2.55
							23	9.98	2.39	10.43	2.44	10.88	2.48	11.11	2.50	11.35	2.53	11.81	2.57	12.29	2.62
							25	9.79	2.45	10.24	2.50	10.69	2.54	10.92	2.56	11.16	2.59	11.62	2.63	12.10	2.68
							27	9.60	2.51	10.05	2.56	10.50	2.60	10.73	2.63	10.97	2.65	11.44	2.69	11.91	2.74
							29	9.41	2.58	9.86	2.62	10.32	2.67	10.55	2.69	10.78	2.71	11.25	2.76	11.72	2.80
							31	9.22	2.64	9.67	2.69	10.13	2.73	10.36	2.75	10.59	2.78	11.06	2.82	11.54	2.87
							33	9.03	2.70	9.48	2.75	9.94	2.80	10.17	2.82	10.40	2.84	10.87	2.89	11.35	2.94
							35	8.84	2.77	9.29	2.82	9.75	2.86	10.00	2.88	10.22	2.91	10.69	2.96	11.17	3.00
							37	8.65	2.84	9.10	2.88	9.56	2.93	9.79	2.95	10.03	2.98	10.50	3.02	10.98	3.07
							39	8.46	2.90	8.92	2.95	9.38	3.00	9.61	3.02	9.84	3.05	10.32	3.09	10.80	3.14
							42	8.18	3.01	8.63	3.06	9.10	3.10	9.33	3.13	9.56	3.15	10.04	3.20	10.52	3.25
							44	7.99	3.08	8.45	3.13	8.91	3.17	9.14	3.20	9.38	3.22	9.86	3.27	10.34	3.32
							46	7.80	3.15	8.26	3.20	8.73	3.25	8.96	3.27	9.20	3.29	9.67	3.34	10.16	3.39

12. Capacity Table

12-5. AJ100TXJ5KH/EA

COOLING

Combination (Capacity Index)					Combination (Total)	Combination (%)	Outdoor Temperature (°C,DB)	Indoor Temperature (°C, WB)													
								14		16		18		19		20		22		24	
								TC(kW)	PI(kW)	TC(kW)	PI(kW)	TC(kW)	PI(kW)	TC(kW)	PI(kW)	TC(kW)	PI(kW)	TC(kW)	PI(kW)	TC(kW)	PI(kW)
2000	2000	2500	3500	3500	13500	135%	10	11.24	2.00	11.69	2.04	12.13	2.08	12.36	2.11	12.59	2.13	13.05	2.17	13.52	2.21
							12	11.05	2.05	11.49	2.10	11.94	2.14	12.17	2.16	12.40	2.18	12.86	2.22	13.33	2.27
							14	10.85	2.11	11.30	2.15	11.75	2.19	11.97	2.22	12.20	2.24	12.67	2.28	13.14	2.32
							16	10.66	2.16	11.10	2.21	11.55	2.25	11.78	2.27	12.01	2.29	12.48	2.34	12.95	2.38
							18	10.47	2.22	10.91	2.26	11.36	2.31	11.59	2.33	11.82	2.35	12.29	2.39	12.76	2.44
							20	10.27	2.28	10.72	2.32	11.17	2.37	11.40	2.39	11.63	2.41	12.10	2.45	12.57	2.50
							21	10.18	2.31	10.62	2.35	11.08	2.39	11.30	2.42	11.54	2.44	12.00	2.48	12.47	2.53
							23	9.98	2.37	10.43	2.41	10.88	2.45	11.11	2.48	11.35	2.50	11.81	2.54	12.29	2.59
							25	9.79	2.43	10.24	2.47	10.69	2.52	10.92	2.54	11.16	2.56	11.62	2.60	12.10	2.65
							27	9.60	2.49	10.05	2.53	10.50	2.58	10.73	2.60	10.97	2.62	11.44	2.67	11.91	2.71
							29	9.41	2.55	9.86	2.59	10.32	2.64	10.55	2.66	10.78	2.68	11.25	2.73	11.72	2.78
							31	9.22	2.61	9.67	2.66	10.13	2.70	10.36	2.73	10.59	2.75	11.06	2.79	11.54	2.84
							33	9.03	2.68	9.48	2.72	9.94	2.77	10.17	2.79	10.40	2.81	10.87	2.86	11.35	2.91
							35	8.84	2.74	9.29	2.79	9.75	2.83	10.00	2.85	10.22	2.88	10.69	2.93	11.17	2.97
							37	8.65	2.81	9.10	2.85	9.56	2.90	9.79	2.92	10.03	2.95	10.50	2.99	10.98	3.04
							39	8.46	2.87	8.92	2.92	9.38	2.97	9.61	2.99	9.84	3.01	10.32	3.06	10.80	3.11
							42	8.18	2.98	8.63	3.02	9.10	3.07	9.33	3.09	9.56	3.12	10.04	3.16	10.52	3.21
							44	7.99	3.05	8.45	3.09	8.91	3.14	9.14	3.16	9.38	3.19	9.86	3.24	10.34	3.28
							46	7.80	3.12	8.26	3.16	8.73	3.21	8.96	3.24	9.20	3.26	9.67	3.31	10.16	3.35
2000	2000	2500	3500	5000	15000	150%	10	11.24	1.98	11.69	2.02	12.13	2.06	12.36	2.08	12.59	2.11	13.05	2.15	13.52	2.19
							12	11.05	2.03	11.49	2.07	11.94	2.12	12.17	2.14	12.40	2.16	12.86	2.20	13.33	2.24
							14	10.85	2.09	11.30	2.13	11.75	2.17	11.97	2.19	12.20	2.21	12.67	2.26	13.14	2.30
							16	10.66	2.14	11.10	2.18	11.55	2.23	11.78	2.25	12.01	2.27	12.48	2.31	12.95	2.36
							18	10.47	2.20	10.91	2.24	11.36	2.28	11.59	2.30	11.82	2.33	12.29	2.37	12.76	2.41
							20	10.27	2.25	10.72	2.30	11.17	2.34	11.40	2.36	11.63	2.38	12.10	2.43	12.57	2.47
							21	10.18	2.28	10.62	2.33	11.08	2.37	11.30	2.39	11.54	2.41	12.00	2.46	12.47	2.50
							23	9.98	2.34	10.43	2.38	10.88	2.43	11.11	2.45	11.35	2.47	11.81	2.52	12.29	2.56
							25	9.79	2.40	10.24	2.44	10.69	2.49	10.92	2.51	11.16	2.53	11.62	2.58	12.10	2.62
							27	9.60	2.46	10.05	2.50	10.50	2.55	10.73	2.57	10.97	2.59	11.44	2.64	11.91	2.68
							29	9.41	2.52	9.86	2.57	10.32	2.61	10.55	2.63	10.78	2.66	11.25	2.70	11.72	2.75
							31	9.22	2.58	9.67	2.63	10.13	2.67	10.36	2.70	10.59	2.72	11.06	2.76	11.54	2.81
							33	9.03	2.65	9.48	2.69	9.94	2.74	10.17	2.76	10.40	2.78	10.87	2.83	11.35	2.87
							35	8.84	2.71	9.29	2.76	9.75	2.80	10.00	2.82	10.22	2.85	10.69	2.89	11.17	2.94
							37	8.65	2.78	9.10	2.82	9.56	2.87	9.79	2.89	10.03	2.92	10.50	2.96	10.98	3.01
							39	8.46	2.84	8.92	2.89	9.38	2.94	9.61	2.96	9.84	2.98	10.32	3.03	10.80	3.07
							42	8.18	2.94	8.63	2.99	9.10	3.04	9.33	3.06	9.56	3.08	10.04	3.13	10.52	3.18
							44	7.99	3.01	8.45	3.06	8.91	3.11	9.14	3.13	9.38	3.15	9.86	3.20	10.34	3.25
							46	7.80	3.08	8.26	3.13	8.73	3.18	8.96	3.20	9.20	3.22	9.67	3.27	10.16	3.32

12. Capacity Table

12-5. AJ100TXJ5KH/EA

COOLING

Combination (Capacity Index)					Combination (Total)	Combination (%)	Outdoor Temperature (°C,DB)	Indoor Temperature (°C, WB)													
								14		16		18		19		20		22		24	
								TC(kW)	PI(kW)	TC(kW)	PI(kW)	TC(kW)	PI(kW)	TC(kW)	PI(kW)	TC(kW)	PI(kW)	TC(kW)	PI(kW)	TC(kW)	PI(kW)
2000	2000	2500	3500	6800	16800	168%	10	11.24	2.06	11.69	2.10	12.13	2.14	12.36	2.17	12.59	2.19	13.05	2.23	13.52	2.27
							12	11.05	2.11	11.49	2.15	11.94	2.20	12.17	2.22	12.40	2.24	12.86	2.29	13.33	2.33
							14	10.85	2.17	11.30	2.21	11.75	2.26	11.97	2.28	12.20	2.30	12.67	2.34	13.14	2.39
							16	10.66	2.22	11.10	2.27	11.55	2.31	11.78	2.34	12.01	2.36	12.48	2.40	12.95	2.45
							18	10.47	2.28	10.91	2.33	11.36	2.37	11.59	2.39	11.82	2.42	12.29	2.46	12.76	2.51
							20	10.27	2.34	10.72	2.39	11.17	2.43	11.40	2.45	11.63	2.48	12.10	2.52	12.57	2.57
							21	10.18	2.37	10.62	2.42	11.08	2.46	11.30	2.48	11.54	2.51	12.00	2.55	12.47	2.60
							23	9.98	2.43	10.43	2.48	10.88	2.52	11.11	2.55	11.35	2.57	11.81	2.61	12.29	2.66
							25	9.79	2.49	10.24	2.54	10.69	2.59	10.92	2.61	11.16	2.63	11.62	2.68	12.10	2.72
							27	9.60	2.56	10.05	2.60	10.50	2.65	10.73	2.67	10.97	2.70	11.44	2.74	11.91	2.79
							29	9.41	2.62	9.86	2.67	10.32	2.71	10.55	2.74	10.78	2.76	11.25	2.81	11.72	2.85
							31	9.22	2.68	9.67	2.73	10.13	2.78	10.36	2.80	10.59	2.83	11.06	2.87	11.54	2.92
							33	9.03	2.75	9.48	2.80	9.94	2.85	10.17	2.87	10.40	2.89	10.87	2.94	11.35	2.99
							35	8.84	2.82	9.29	2.87	9.75	2.91	10.00	2.93	10.22	2.96	10.69	3.01	11.17	3.06
							37	8.65	2.89	9.10	2.93	9.56	2.98	9.79	3.00	10.03	3.03	10.50	3.08	10.98	3.12
							39	8.46	2.95	8.92	3.00	9.38	3.05	9.61	3.07	9.84	3.10	10.32	3.15	10.80	3.19
							42	8.18	3.06	8.63	3.11	9.10	3.16	9.33	3.18	9.56	3.21	10.04	3.25	10.52	3.30
							44	7.99	3.13	8.45	3.18	8.91	3.23	9.14	3.25	9.38	3.28	9.86	3.33	10.34	3.37
							46	7.80	3.20	8.26	3.25	8.73	3.30	8.96	3.33	9.20	3.35	9.67	3.40	10.16	3.45
2000	2000	2500	5000	5000	16500	165%	10	11.24	2.06	11.69	2.10	12.13	2.14	12.36	2.17	12.59	2.19	13.05	2.23	13.52	2.27
							12	11.05	2.11	11.49	2.15	11.94	2.20	12.17	2.22	12.40	2.24	12.86	2.29	13.33	2.33
							14	10.85	2.17	11.30	2.21	11.75	2.26	11.97	2.28	12.20	2.30	12.67	2.34	13.14	2.39
							16	10.66	2.22	11.10	2.27	11.55	2.31	11.78	2.34	12.01	2.36	12.48	2.40	12.95	2.45
							18	10.47	2.28	10.91	2.33	11.36	2.37	11.59	2.39	11.82	2.42	12.29	2.46	12.76	2.51
							20	10.27	2.34	10.72	2.39	11.17	2.43	11.40	2.45	11.63	2.48	12.10	2.52	12.57	2.57
							21	10.18	2.37	10.62	2.42	11.08	2.46	11.30	2.48	11.54	2.51	12.00	2.55	12.47	2.60
							23	9.98	2.43	10.43	2.48	10.88	2.52	11.11	2.55	11.35	2.57	11.81	2.61	12.29	2.66
							25	9.79	2.49	10.24	2.54	10.69	2.59	10.92	2.61	11.16	2.63	11.62	2.68	12.10	2.72
							27	9.60	2.56	10.05	2.60	10.50	2.65	10.73	2.67	10.97	2.70	11.44	2.74	11.91	2.79
							29	9.41	2.62	9.86	2.67	10.32	2.71	10.55	2.74	10.78	2.76	11.25	2.81	11.72	2.85
							31	9.22	2.68	9.67	2.73	10.13	2.78	10.36	2.80	10.59	2.83	11.06	2.87	11.54	2.92
							33	9.03	2.75	9.48	2.80	9.94	2.85	10.17	2.87	10.40	2.89	10.87	2.94	11.35	2.99
							35	8.84	2.82	9.29	2.87	9.75	2.91	10.00	2.93	10.22	2.96	10.69	3.01	11.17	3.06
							37	8.65	2.89	9.10	2.93	9.56	2.98	9.79	3.00	10.03	3.03	10.50	3.08	10.98	3.12
							39	8.46	2.95	8.92	3.00	9.38	3.05	9.61	3.07	9.84	3.10	10.32	3.15	10.80	3.19
							42	8.18	3.06	8.63	3.11	9.10	3.16	9.33	3.18	9.56	3.21	10.04	3.25	10.52	3.30
							44	7.99	3.13	8.45	3.18	8.91	3.23	9.14	3.25	9.38	3.28	9.86	3.33	10.34	3.37
							46	7.80	3.20	8.26	3.25	8.73	3.30	8.96	3.33	9.20	3.35	9.67	3.40	10.16	3.45

12. Capacity Table

12-5. AJ100TXJ5KH/EA

COOLING

Combination (Capacity Index)					Combination (Total)	Combination (%)	Outdoor Temperature (°C,DB)	Indoor Temperature (°C, WB)													
								14		16		18		19		20		22		24	
								TC(kW)	PI(kW)	TC(kW)	PI(kW)	TC(kW)	PI(kW)	TC(kW)	PI(kW)	TC(kW)	PI(kW)	TC(kW)	PI(kW)	TC(kW)	PI(kW)
2000	2000	3500	3500	3500	14500	145%	10	11.24	1.97	11.69	2.01	12.13	2.06	12.36	2.08	12.59	2.10	13.05	2.14	13.52	2.18
							12	11.05	2.02	11.49	2.07	11.94	2.11	12.17	2.13	12.40	2.15	12.86	2.19	13.33	2.24
							14	10.85	2.08	11.30	2.12	11.75	2.16	11.97	2.18	12.20	2.21	12.67	2.25	13.14	2.29
							16	10.66	2.13	11.10	2.18	11.55	2.22	11.78	2.24	12.01	2.26	12.48	2.30	12.95	2.35
							18	10.47	2.19	10.91	2.23	11.36	2.27	11.59	2.30	11.82	2.32	12.29	2.36	12.76	2.40
							20	10.27	2.25	10.72	2.29	11.17	2.33	11.40	2.35	11.63	2.38	12.10	2.42	12.57	2.46
							21	10.18	2.27	10.62	2.32	11.08	2.36	11.30	2.38	11.54	2.40	12.00	2.45	12.47	2.49
							23	9.98	2.33	10.43	2.38	10.88	2.42	11.11	2.44	11.35	2.46	11.81	2.51	12.29	2.55
							25	9.79	2.39	10.24	2.44	10.69	2.48	10.92	2.50	11.16	2.52	11.62	2.57	12.10	2.61
							27	9.60	2.45	10.05	2.50	10.50	2.54	10.73	2.56	10.97	2.58	11.44	2.63	11.91	2.67
							29	9.41	2.51	9.86	2.56	10.32	2.60	10.55	2.62	10.78	2.65	11.25	2.69	11.72	2.74
							31	9.22	2.57	9.67	2.62	10.13	2.66	10.36	2.69	10.59	2.71	11.06	2.75	11.54	2.80
							33	9.03	2.64	9.48	2.68	9.94	2.73	10.17	2.75	10.40	2.77	10.87	2.82	11.35	2.86
							35	8.84	2.70	9.29	2.75	9.75	2.79	10.00	2.81	10.22	2.84	10.69	2.88	11.17	2.93
							37	8.65	2.77	9.10	2.81	9.56	2.86	9.79	2.88	10.03	2.90	10.50	2.95	10.98	3.00
							39	8.46	2.83	8.92	2.88	9.38	2.93	9.61	2.95	9.84	2.97	10.32	3.02	10.80	3.06
							42	8.18	2.93	8.63	2.98	9.10	3.03	9.33	3.05	9.56	3.07	10.04	3.12	10.52	3.17
							44	7.99	3.00	8.45	3.05	8.91	3.10	9.14	3.12	9.38	3.14	9.86	3.19	10.34	3.24
							46	7.80	3.07	8.26	3.12	8.73	3.17	8.96	3.19	9.20	3.21	9.67	3.26	10.16	3.31
2000	2000	3500	3500	5000	16000	160%	10	11.24	2.01	11.69	2.06	12.13	2.10	12.36	2.12	12.59	2.14	13.05	2.19	13.52	2.23
							12	11.05	2.07	11.49	2.11	11.94	2.15	12.17	2.18	12.40	2.20	12.86	2.24	13.33	2.28
							14	10.85	2.12	11.30	2.17	11.75	2.21	11.97	2.23	12.20	2.25	12.67	2.30	13.14	2.34
							16	10.66	2.18	11.10	2.22	11.55	2.27	11.78	2.29	12.01	2.31	12.48	2.35	12.95	2.40
							18	10.47	2.24	10.91	2.28	11.36	2.32	11.59	2.35	11.82	2.37	12.29	2.41	12.76	2.46
							20	10.27	2.29	10.72	2.34	11.17	2.38	11.40	2.40	11.63	2.43	12.10	2.47	12.57	2.52
							21	10.18	2.32	10.62	2.37	11.08	2.41	11.30	2.43	11.54	2.46	12.00	2.50	12.47	2.55
							23	9.98	2.38	10.43	2.43	10.88	2.47	11.11	2.49	11.35	2.52	11.81	2.56	12.29	2.61
							25	9.79	2.44	10.24	2.49	10.69	2.53	10.92	2.56	11.16	2.58	11.62	2.62	12.10	2.67
							27	9.60	2.50	10.05	2.55	10.50	2.59	10.73	2.62	10.97	2.64	11.44	2.69	11.91	2.73
							29	9.41	2.57	9.86	2.61	10.32	2.66	10.55	2.68	10.78	2.70	11.25	2.75	11.72	2.79
							31	9.22	2.63	9.67	2.68	10.13	2.72	10.36	2.74	10.59	2.77	11.06	2.81	11.54	2.86
							33	9.03	2.69	9.48	2.74	9.94	2.79	10.17	2.81	10.40	2.83	10.87	2.88	11.35	2.93
							35	8.84	2.76	9.29	2.81	9.75	2.85	10.00	2.87	10.22	2.90	10.69	2.95	11.17	2.99
							37	8.65	2.83	9.10	2.87	9.56	2.92	9.79	2.94	10.03	2.97	10.50	3.01	10.98	3.06
							39	8.46	2.89	8.92	2.94	9.38	2.99	9.61	3.01	9.84	3.04	10.32	3.08	10.80	3.13
							42	8.18	3.00	8.63	3.04	9.10	3.09	9.33	3.12	9.56	3.14	10.04	3.19	10.52	3.23
							44	7.99	3.07	8.45	3.11	8.91	3.16	9.14	3.19	9.38	3.21	9.86	3.26	10.34	3.31
							46	7.80	3.14	8.26	3.19	8.73	3.23	8.96	3.26	9.20	3.28	9.67	3.33	10.16	3.38

12. Capacity Table

12-5. AJ100TXJ5KH/EA

COOLING

Combination (Capacity Index)					Combination (Total)	Combination (%)	Outdoor Temperature (°C,DB)	Indoor Temperature (°C, WB)													
								14		16		18		19		20		22		24	
								TC(kW)	PI(kW)	TC(kW)	PI(kW)	TC(kW)	PI(kW)	TC(kW)	PI(kW)	TC(kW)	PI(kW)	TC(kW)	PI(kW)	TC(kW)	PI(kW)
2000	2500	2500	2500	2500	12000	120%	10	8.57	1.92	12.09	1.97	12.32	2.02	12.46	2.04	12.61	2.07	12.96	2.11	13.38	2.15
							12	8.57	1.97	11.76	2.02	12.01	2.07	12.15	2.09	12.32	2.11	12.69	2.16	13.12	2.20
							14	8.57	2.02	11.45	2.07	11.71	2.12	11.86	2.14	12.03	2.16	12.42	2.21	12.87	2.25
							16	8.57	2.07	11.15	2.12	11.42	2.17	11.59	2.19	11.77	2.21	12.17	2.26	12.63	2.30
							18	8.57	2.13	10.86	2.17	11.15	2.22	11.32	2.24	11.51	2.27	11.93	2.31	12.41	2.35
							20	8.57	2.18	10.58	2.23	10.89	2.28	11.07	2.30	11.27	2.32	11.71	2.36	12.20	2.40
							21	8.57	2.21	10.45	2.26	10.77	2.30	10.95	2.32	11.15	2.35	11.60	2.39	12.10	2.43
							23	8.57	2.27	10.19	2.31	10.53	2.36	10.72	2.38	10.93	2.40	11.39	2.45	11.92	2.49
							25	8.57	2.32	9.95	2.37	10.31	2.42	10.51	2.44	10.72	2.46	11.20	2.50	11.74	2.54
							27	8.57	2.38	9.73	2.43	10.10	2.47	10.31	2.50	10.53	2.52	11.02	2.56	11.58	2.60
							29	8.57	2.44	9.51	2.49	9.90	2.54	10.12	2.56	10.35	2.58	10.86	2.62	11.43	2.66
							31	8.57	2.51	9.31	2.55	9.71	2.60	9.94	2.62	10.18	2.64	10.71	2.68	11.30	2.72
							33	8.57	2.57	9.12	2.62	9.54	2.66	9.78	2.68	10.03	2.70	10.57	2.75	11.18	2.79
							35	8.57	2.63	8.95	2.68	9.39	2.72	9.70	2.74	9.89	2.77	10.45	2.81	11.07	2.85
							37	8.57	2.70	8.79	2.75	9.24	2.79	9.49	2.81	9.76	2.83	10.34	2.88	10.98	2.91
							39	8.57	2.77	8.64	2.81	9.11	2.86	9.37	2.88	9.65	2.90	10.24	2.94	10.90	2.98
							42	8.57	2.87	8.45	2.92	8.94	2.96	9.21	2.98	9.50	3.01	10.12	3.05	10.80	3.09
							44	8.57	2.94	8.33	2.99	8.85	3.03	9.13	3.06	9.42	3.08	10.06	3.12	10.76	3.16
							46	8.57	3.02	8.23	3.06	8.76	3.11	9.05	3.13	9.36	3.15	10.01	3.19	10.73	3.23
2000	2500	2500	2500	3500	13000	130%	10	11.24	1.96	11.69	2.01	12.13	2.05	12.36	2.07	12.59	2.09	13.05	2.13	13.52	2.17
							12	11.05	2.02	11.49	2.06	11.94	2.10	12.17	2.12	12.40	2.14	12.86	2.19	13.33	2.23
							14	10.85	2.07	11.30	2.11	11.75	2.16	11.97	2.18	12.20	2.20	12.67	2.24	13.14	2.28
							16	10.66	2.13	11.10	2.17	11.55	2.21	11.78	2.23	12.01	2.25	12.48	2.30	12.95	2.34
							18	10.47	2.18	10.91	2.22	11.36	2.27	11.59	2.29	11.82	2.31	12.29	2.35	12.76	2.40
							20	10.27	2.24	10.72	2.28	11.17	2.32	11.40	2.35	11.63	2.37	12.10	2.41	12.57	2.45
							21	10.18	2.27	10.62	2.31	11.08	2.35	11.30	2.37	11.54	2.40	12.00	2.44	12.47	2.48
							23	9.98	2.32	10.43	2.37	10.88	2.41	11.11	2.43	11.35	2.46	11.81	2.50	12.29	2.54
							25	9.79	2.38	10.24	2.43	10.69	2.47	10.92	2.49	11.16	2.51	11.62	2.56	12.10	2.60
							27	9.60	2.44	10.05	2.49	10.50	2.53	10.73	2.55	10.97	2.58	11.44	2.62	11.91	2.66
							29	9.41	2.50	9.86	2.55	10.32	2.59	10.55	2.62	10.78	2.64	11.25	2.68	11.72	2.73
							31	9.22	2.57	9.67	2.61	10.13	2.66	10.36	2.68	10.59	2.70	11.06	2.75	11.54	2.79
							33	9.03	2.63	9.48	2.67	9.94	2.72	10.17	2.74	10.40	2.76	10.87	2.81	11.35	2.85
							35	8.84	2.69	9.29	2.74	9.75	2.78	10.00	2.80	10.22	2.83	10.69	2.87	11.17	2.92
							37	8.65	2.76	9.10	2.80	9.56	2.85	9.79	2.87	10.03	2.89	10.50	2.94	10.98	2.99
							39	8.46	2.82	8.92	2.87	9.38	2.92	9.61	2.94	9.84	2.96	10.32	3.01	10.80	3.05
							42	8.18	2.92	8.63	2.97	9.10	3.02	9.33	3.04	9.56	3.06	10.04	3.11	10.52	3.16
							44	7.99	2.99	8.45	3.04	8.91	3.09	9.14	3.11	9.38	3.13	9.86	3.18	10.34	3.23
							46	7.80	3.06	8.26	3.11	8.73	3.16	8.96	3.18	9.20	3.20	9.67	3.25	10.16	3.30

12. Capacity Table

12-5. AJ100TXJ5KH/EA

COOLING

Combination (Capacity Index)					Combination (Total)	Combination (%)	Outdoor Temperature (°C,DB)	Indoor Temperature (°C, WB)													
								14		16		18		19		20		22		24	
								TC(kW)	PI(kW)	TC(kW)	PI(kW)	TC(kW)	PI(kW)	TC(kW)	PI(kW)	TC(kW)	PI(kW)	TC(kW)	PI(kW)	TC(kW)	PI(kW)
2000	2500	2500	2500	5000	14500	145%	10	11.24	1.97	11.69	2.01	12.13	2.06	12.36	2.08	12.59	2.10	13.05	2.14	13.52	2.18
							12	11.05	2.02	11.49	2.07	11.94	2.11	12.17	2.13	12.40	2.15	12.86	2.19	13.33	2.24
							14	10.85	2.08	11.30	2.12	11.75	2.16	11.97	2.18	12.20	2.21	12.67	2.25	13.14	2.29
							16	10.66	2.13	11.10	2.18	11.55	2.22	11.78	2.24	12.01	2.26	12.48	2.30	12.95	2.35
							18	10.47	2.19	10.91	2.23	11.36	2.27	11.59	2.30	11.82	2.32	12.29	2.36	12.76	2.40
							20	10.27	2.25	10.72	2.29	11.17	2.33	11.40	2.35	11.63	2.38	12.10	2.42	12.57	2.46
							21	10.18	2.27	10.62	2.32	11.08	2.36	11.30	2.38	11.54	2.40	12.00	2.45	12.47	2.49
							23	9.98	2.33	10.43	2.38	10.88	2.42	11.11	2.44	11.35	2.46	11.81	2.51	12.29	2.55
							25	9.79	2.39	10.24	2.44	10.69	2.48	10.92	2.50	11.16	2.52	11.62	2.57	12.10	2.61
							27	9.60	2.45	10.05	2.50	10.50	2.54	10.73	2.56	10.97	2.58	11.44	2.63	11.91	2.67
							29	9.41	2.51	9.86	2.56	10.32	2.60	10.55	2.62	10.78	2.65	11.25	2.69	11.72	2.74
							31	9.22	2.57	9.67	2.62	10.13	2.66	10.36	2.69	10.59	2.71	11.06	2.75	11.54	2.80
							33	9.03	2.64	9.48	2.68	9.94	2.73	10.17	2.75	10.40	2.77	10.87	2.82	11.35	2.86
							35	8.84	2.70	9.29	2.75	9.75	2.79	10.00	2.81	10.22	2.84	10.69	2.88	11.17	2.93
							37	8.65	2.77	9.10	2.81	9.56	2.86	9.79	2.88	10.03	2.90	10.50	2.95	10.98	3.00
							39	8.46	2.83	8.92	2.88	9.38	2.93	9.61	2.95	9.84	2.97	10.32	3.02	10.80	3.06
							42	8.18	2.93	8.63	2.98	9.10	3.03	9.33	3.05	9.56	3.07	10.04	3.12	10.52	3.17
							44	7.99	3.00	8.45	3.05	8.91	3.10	9.14	3.12	9.38	3.14	9.86	3.19	10.34	3.24
							46	7.80	3.07	8.26	3.12	8.73	3.17	8.96	3.19	9.20	3.21	9.67	3.26	10.16	3.31
2000	2500	2500	2500	6800	16300	163%	10	11.24	2.02	11.69	2.06	12.13	2.11	12.36	2.13	12.59	2.15	13.05	2.19	13.52	2.24
							12	11.05	2.07	11.49	2.12	11.94	2.16	12.17	2.18	12.40	2.20	12.86	2.25	13.33	2.29
							14	10.85	2.13	11.30	2.17	11.75	2.22	11.97	2.24	12.20	2.26	12.67	2.30	13.14	2.35
							16	10.66	2.19	11.10	2.23	11.55	2.27	11.78	2.30	12.01	2.32	12.48	2.36	12.95	2.41
							18	10.47	2.24	10.91	2.29	11.36	2.33	11.59	2.35	11.82	2.38	12.29	2.42	12.76	2.46
							20	10.27	2.30	10.72	2.35	11.17	2.39	11.40	2.41	11.63	2.43	12.10	2.48	12.57	2.52
							21	10.18	2.33	10.62	2.38	11.08	2.42	11.30	2.44	11.54	2.46	12.00	2.51	12.47	2.55
							23	9.98	2.39	10.43	2.44	10.88	2.48	11.11	2.50	11.35	2.53	11.81	2.57	12.29	2.62
							25	9.79	2.45	10.24	2.50	10.69	2.54	10.92	2.56	11.16	2.59	11.62	2.63	12.10	2.68
							27	9.60	2.51	10.05	2.56	10.50	2.60	10.73	2.63	10.97	2.65	11.44	2.69	11.91	2.74
							29	9.41	2.58	9.86	2.62	10.32	2.67	10.55	2.69	10.78	2.71	11.25	2.76	11.72	2.80
							31	9.22	2.64	9.67	2.69	10.13	2.73	10.36	2.75	10.59	2.78	11.06	2.82	11.54	2.87
							33	9.03	2.70	9.48	2.75	9.94	2.80	10.17	2.82	10.40	2.84	10.87	2.89	11.35	2.94
							35	8.84	2.77	9.29	2.82	9.75	2.86	10.00	2.88	10.22	2.91	10.69	2.96	11.17	3.00
							37	8.65	2.84	9.10	2.88	9.56	2.93	9.79	2.95	10.03	2.98	10.50	3.02	10.98	3.07
							39	8.46	2.90	8.92	2.95	9.38	3.00	9.61	3.02	9.84	3.05	10.32	3.09	10.80	3.14
							42	8.18	3.01	8.63	3.06	9.10	3.10	9.33	3.13	9.56	3.15	10.04	3.20	10.52	3.25
							44	7.99	3.08	8.45	3.13	8.91	3.17	9.14	3.20	9.38	3.22	9.86	3.27	10.34	3.32
							46	7.80	3.15	8.26	3.20	8.73	3.25	8.96	3.27	9.20	3.29	9.67	3.34	10.16	3.39

12. Capacity Table

12-5. AJ100TXJ5KH/EA

COOLING

Combination (Capacity Index)					Combination (Total)	Combination (%)	Outdoor Temperature (°C,DB)	Indoor Temperature (°C, WB)													
								14		16		18		19		20		22		24	
								TC(kW)	PI(kW)	TC(kW)	PI(kW)	TC(kW)	PI(kW)	TC(kW)	PI(kW)	TC(kW)	PI(kW)	TC(kW)	PI(kW)	TC(kW)	PI(kW)
2000	2500	2500	3500	3500	14000	140%	10	11.24	2.00	11.69	2.04	12.13	2.08	12.36	2.11	12.59	2.13	13.05	2.17	13.52	2.21
							12	11.05	2.05	11.49	2.10	11.94	2.14	12.17	2.16	12.40	2.18	12.86	2.22	13.33	2.27
							14	10.85	2.11	11.30	2.15	11.75	2.19	11.97	2.22	12.20	2.24	12.67	2.28	13.14	2.32
							16	10.66	2.16	11.10	2.21	11.55	2.25	11.78	2.27	12.01	2.29	12.48	2.34	12.95	2.38
							18	10.47	2.22	10.91	2.26	11.36	2.31	11.59	2.33	11.82	2.35	12.29	2.39	12.76	2.44
							20	10.27	2.28	10.72	2.32	11.17	2.37	11.40	2.39	11.63	2.41	12.10	2.45	12.57	2.50
							21	10.18	2.31	10.62	2.35	11.08	2.39	11.30	2.42	11.54	2.44	12.00	2.48	12.47	2.53
							23	9.98	2.37	10.43	2.41	10.88	2.45	11.11	2.48	11.35	2.50	11.81	2.54	12.29	2.59
							25	9.79	2.43	10.24	2.47	10.69	2.52	10.92	2.54	11.16	2.56	11.62	2.60	12.10	2.65
							27	9.60	2.49	10.05	2.53	10.50	2.58	10.73	2.60	10.97	2.62	11.44	2.67	11.91	2.71
							29	9.41	2.55	9.86	2.59	10.32	2.64	10.55	2.66	10.78	2.68	11.25	2.73	11.72	2.78
							31	9.22	2.61	9.67	2.66	10.13	2.70	10.36	2.73	10.59	2.75	11.06	2.79	11.54	2.84
							33	9.03	2.68	9.48	2.72	9.94	2.77	10.17	2.79	10.40	2.81	10.87	2.86	11.35	2.91
							35	8.84	2.74	9.29	2.79	9.75	2.83	10.00	2.85	10.22	2.88	10.69	2.93	11.17	2.97
							37	8.65	2.81	9.10	2.85	9.56	2.90	9.79	2.92	10.03	2.95	10.50	2.99	10.98	3.04
							39	8.46	2.87	8.92	2.92	9.38	2.97	9.61	2.99	9.84	3.01	10.32	3.06	10.80	3.11
							42	8.18	2.98	8.63	3.02	9.10	3.07	9.33	3.09	9.56	3.12	10.04	3.16	10.52	3.21
							44	7.99	3.05	8.45	3.09	8.91	3.14	9.14	3.16	9.38	3.19	9.86	3.24	10.34	3.28
							46	7.80	3.12	8.26	3.16	8.73	3.21	8.96	3.24	9.20	3.26	9.67	3.31	10.16	3.35
2000	2500	2500	3500	5000	15500	155%	10	11.24	2.01	11.69	2.05	12.13	2.09	12.36	2.11	12.59	2.14	13.05	2.18	13.52	2.22
							12	11.05	2.06	11.49	2.10	11.94	2.15	12.17	2.17	12.40	2.19	12.86	2.23	13.33	2.28
							14	10.85	2.12	11.30	2.16	11.75	2.20	11.97	2.22	12.20	2.25	12.67	2.29	13.14	2.33
							16	10.66	2.17	11.10	2.21	11.55	2.26	11.78	2.28	12.01	2.30	12.48	2.35	12.95	2.39
							18	10.47	2.23	10.91	2.27	11.36	2.32	11.59	2.34	11.82	2.36	12.29	2.40	12.76	2.45
							20	10.27	2.29	10.72	2.33	11.17	2.37	11.40	2.40	11.63	2.42	12.10	2.46	12.57	2.51
							21	10.18	2.31	10.62	2.36	11.08	2.40	11.30	2.43	11.54	2.45	12.00	2.49	12.47	2.54
							23	9.98	2.37	10.43	2.42	10.88	2.46	11.11	2.49	11.35	2.51	11.81	2.55	12.29	2.60
							25	9.79	2.43	10.24	2.48	10.69	2.52	10.92	2.55	11.16	2.57	11.62	2.61	12.10	2.66
							27	9.60	2.50	10.05	2.54	10.50	2.59	10.73	2.61	10.97	2.63	11.44	2.68	11.91	2.72
							29	9.41	2.56	9.86	2.60	10.32	2.65	10.55	2.67	10.78	2.69	11.25	2.74	11.72	2.79
							31	9.22	2.62	9.67	2.67	10.13	2.71	10.36	2.74	10.59	2.76	11.06	2.80	11.54	2.85
							33	9.03	2.69	9.48	2.73	9.94	2.78	10.17	2.80	10.40	2.82	10.87	2.87	11.35	2.92
							35	8.84	2.75	9.29	2.80	9.75	2.84	10.00	2.86	10.22	2.89	10.69	2.94	11.17	2.98
							37	8.65	2.82	9.10	2.86	9.56	2.91	9.79	2.93	10.03	2.96	10.50	3.00	10.98	3.05
							39	8.46	2.88	8.92	2.93	9.38	2.98	9.61	3.00	9.84	3.02	10.32	3.07	10.80	3.12
							42	8.18	2.99	8.63	3.03	9.10	3.08	9.33	3.10	9.56	3.13	10.04	3.18	10.52	3.22
							44	7.99	3.06	8.45	3.10	8.91	3.15	9.14	3.18	9.38	3.20	9.86	3.25	10.34	3.29
							46	7.80	3.13	8.26	3.17	8.73	3.22	8.96	3.25	9.20	3.27	9.67	3.32	10.16	3.37

12. Capacity Table

12-5. AJ100TXJ5KH/EA

COOLING

Combination (Capacity Index)					Combination (Total)	Combination (%)	Outdoor Temperature (°C,DB)	Indoor Temperature (°C, WB)													
								14		16		18		19		20		22		24	
								TC(kW)	PI(kW)	TC(kW)	PI(kW)	TC(kW)	PI(kW)	TC(kW)	PI(kW)	TC(kW)	PI(kW)	TC(kW)	PI(kW)	TC(kW)	PI(kW)
2000	2500	2500	3500	6800	17300	173%	10	11.24	2.06	11.69	2.10	12.13	2.14	12.36	2.17	12.59	2.19	13.05	2.23	13.52	2.27
							12	11.05	2.11	11.49	2.15	11.94	2.20	12.17	2.22	12.40	2.24	12.86	2.29	13.33	2.33
							14	10.85	2.17	11.30	2.21	11.75	2.26	11.97	2.28	12.20	2.30	12.67	2.34	13.14	2.39
							16	10.66	2.22	11.10	2.27	11.55	2.31	11.78	2.34	12.01	2.36	12.48	2.40	12.95	2.45
							18	10.47	2.28	10.91	2.33	11.36	2.37	11.59	2.39	11.82	2.42	12.29	2.46	12.76	2.51
							20	10.27	2.34	10.72	2.39	11.17	2.43	11.40	2.45	11.63	2.48	12.10	2.52	12.57	2.57
							21	10.18	2.37	10.62	2.42	11.08	2.46	11.30	2.48	11.54	2.51	12.00	2.55	12.47	2.60
							23	9.98	2.43	10.43	2.48	10.88	2.52	11.11	2.55	11.35	2.57	11.81	2.61	12.29	2.66
							25	9.79	2.49	10.24	2.54	10.69	2.59	10.92	2.61	11.16	2.63	11.62	2.68	12.10	2.72
							27	9.60	2.56	10.05	2.60	10.50	2.65	10.73	2.67	10.97	2.70	11.44	2.74	11.91	2.79
							29	9.41	2.62	9.86	2.67	10.32	2.71	10.55	2.74	10.78	2.76	11.25	2.81	11.72	2.85
							31	9.22	2.68	9.67	2.73	10.13	2.78	10.36	2.80	10.59	2.83	11.06	2.87	11.54	2.92
							33	9.03	2.75	9.48	2.80	9.94	2.85	10.17	2.87	10.40	2.89	10.87	2.94	11.35	2.99
							35	8.84	2.82	9.29	2.87	9.75	2.91	10.00	2.93	10.22	2.96	10.69	3.01	11.17	3.06
							37	8.65	2.89	9.10	2.93	9.56	2.98	9.79	3.00	10.03	3.03	10.50	3.08	10.98	3.12
							39	8.46	2.95	8.92	3.00	9.38	3.05	9.61	3.07	9.84	3.10	10.32	3.15	10.80	3.19
							42	8.18	3.06	8.63	3.11	9.10	3.16	9.33	3.18	9.56	3.21	10.04	3.25	10.52	3.30
							44	7.99	3.13	8.45	3.18	8.91	3.23	9.14	3.25	9.38	3.28	9.86	3.33	10.34	3.37
							46	7.80	3.20	8.26	3.25	8.73	3.30	8.96	3.33	9.20	3.35	9.67	3.40	10.16	3.45
2000	2500	2500	5000	5000	17000	170%	10	11.24	2.06	11.69	2.10	12.13	2.14	12.36	2.17	12.59	2.19	13.05	2.23	13.52	2.27
							12	11.05	2.11	11.49	2.15	11.94	2.20	12.17	2.22	12.40	2.24	12.86	2.29	13.33	2.33
							14	10.85	2.17	11.30	2.21	11.75	2.26	11.97	2.28	12.20	2.30	12.67	2.34	13.14	2.39
							16	10.66	2.22	11.10	2.27	11.55	2.31	11.78	2.34	12.01	2.36	12.48	2.40	12.95	2.45
							18	10.47	2.28	10.91	2.33	11.36	2.37	11.59	2.39	11.82	2.42	12.29	2.46	12.76	2.51
							20	10.27	2.34	10.72	2.39	11.17	2.43	11.40	2.45	11.63	2.48	12.10	2.52	12.57	2.57
							21	10.18	2.37	10.62	2.42	11.08	2.46	11.30	2.48	11.54	2.51	12.00	2.55	12.47	2.60
							23	9.98	2.43	10.43	2.48	10.88	2.52	11.11	2.55	11.35	2.57	11.81	2.61	12.29	2.66
							25	9.79	2.49	10.24	2.54	10.69	2.59	10.92	2.61	11.16	2.63	11.62	2.68	12.10	2.72
							27	9.60	2.56	10.05	2.60	10.50	2.65	10.73	2.67	10.97	2.70	11.44	2.74	11.91	2.79
							29	9.41	2.62	9.86	2.67	10.32	2.71	10.55	2.74	10.78	2.76	11.25	2.81	11.72	2.85
							31	9.22	2.68	9.67	2.73	10.13	2.78	10.36	2.80	10.59	2.83	11.06	2.87	11.54	2.92
							33	9.03	2.75	9.48	2.80	9.94	2.85	10.17	2.87	10.40	2.89	10.87	2.94	11.35	2.99
							35	8.84	2.82	9.29	2.87	9.75	2.91	10.00	2.93	10.22	2.96	10.69	3.01	11.17	3.06
							37	8.65	2.89	9.10	2.93	9.56	2.98	9.79	3.00	10.03	3.03	10.50	3.08	10.98	3.12
							39	8.46	2.95	8.92	3.00	9.38	3.05	9.61	3.07	9.84	3.10	10.32	3.15	10.80	3.19
							42	8.18	3.06	8.63	3.11	9.10	3.16	9.33	3.18	9.56	3.21	10.04	3.25	10.52	3.30
							44	7.99	3.13	8.45	3.18	8.91	3.23	9.14	3.25	9.38	3.28	9.86	3.33	10.34	3.37
							46	7.80	3.20	8.26	3.25	8.73	3.30	8.96	3.33	9.20	3.35	9.67	3.40	10.16	3.45

12. Capacity Table

12-5. AJ100TXJ5KH/EA

COOLING

Combination (Capacity Index)					Combination (Total)	Combination (%)	Outdoor Temperature (°C,DB)	Indoor Temperature (°C, WB)													
								14		16		18		19		20		22		24	
								TC(kW)	PI(kW)	TC(kW)	PI(kW)	TC(kW)	PI(kW)	TC(kW)	PI(kW)	TC(kW)	PI(kW)	TC(kW)	PI(kW)	TC(kW)	PI(kW)
2000	2500	3500	3500	3500	15000	150%	10	11.24	1.97	11.69	2.01	12.13	2.06	12.36	2.08	12.59	2.10	13.05	2.14	13.52	2.18
							12	11.05	2.02	11.49	2.07	11.94	2.11	12.17	2.13	12.40	2.15	12.86	2.19	13.33	2.24
							14	10.85	2.08	11.30	2.12	11.75	2.16	11.97	2.18	12.20	2.21	12.67	2.25	13.14	2.29
							16	10.66	2.13	11.10	2.18	11.55	2.22	11.78	2.24	12.01	2.26	12.48	2.30	12.95	2.35
							18	10.47	2.19	10.91	2.23	11.36	2.27	11.59	2.30	11.82	2.32	12.29	2.36	12.76	2.40
							20	10.27	2.25	10.72	2.29	11.17	2.33	11.40	2.35	11.63	2.38	12.10	2.42	12.57	2.46
							21	10.18	2.27	10.62	2.32	11.08	2.36	11.30	2.38	11.54	2.40	12.00	2.45	12.47	2.49
							23	9.98	2.33	10.43	2.38	10.88	2.42	11.11	2.44	11.35	2.46	11.81	2.51	12.29	2.55
							25	9.79	2.39	10.24	2.44	10.69	2.48	10.92	2.50	11.16	2.52	11.62	2.57	12.10	2.61
							27	9.60	2.45	10.05	2.50	10.50	2.54	10.73	2.56	10.97	2.58	11.44	2.63	11.91	2.67
							29	9.41	2.51	9.86	2.56	10.32	2.60	10.55	2.62	10.78	2.65	11.25	2.69	11.72	2.74
							31	9.22	2.57	9.67	2.62	10.13	2.66	10.36	2.69	10.59	2.71	11.06	2.75	11.54	2.80
							33	9.03	2.64	9.48	2.68	9.94	2.73	10.17	2.75	10.40	2.77	10.87	2.82	11.35	2.86
							35	8.84	2.70	9.29	2.75	9.75	2.79	10.00	2.81	10.22	2.84	10.69	2.88	11.17	2.93
							37	8.65	2.77	9.10	2.81	9.56	2.86	9.79	2.88	10.03	2.90	10.50	2.95	10.98	3.00
							39	8.46	2.83	8.92	2.88	9.38	2.93	9.61	2.95	9.84	2.97	10.32	3.02	10.80	3.06
							42	8.18	2.93	8.63	2.98	9.10	3.03	9.33	3.05	9.56	3.07	10.04	3.12	10.52	3.17
							44	7.99	3.00	8.45	3.05	8.91	3.10	9.14	3.12	9.38	3.14	9.86	3.19	10.34	3.24
							46	7.80	3.07	8.26	3.12	8.73	3.17	8.96	3.19	9.20	3.21	9.67	3.26	10.16	3.31
2000	2500	3500	3500	5000	16500	165%	10	11.24	2.05	11.69	2.09	12.13	2.14	12.36	2.16	12.59	2.18	13.05	2.22	13.52	2.27
							12	11.05	2.10	11.49	2.15	11.94	2.19	12.17	2.21	12.40	2.24	12.86	2.28	13.33	2.32
							14	10.85	2.16	11.30	2.20	11.75	2.25	11.97	2.27	12.20	2.29	12.67	2.34	13.14	2.38
							16	10.66	2.22	11.10	2.26	11.55	2.31	11.78	2.33	12.01	2.35	12.48	2.39	12.95	2.44
							18	10.47	2.27	10.91	2.32	11.36	2.36	11.59	2.39	11.82	2.41	12.29	2.45	12.76	2.50
							20	10.27	2.33	10.72	2.38	11.17	2.42	11.40	2.45	11.63	2.47	12.10	2.51	12.57	2.56
							21	10.18	2.36	10.62	2.41	11.08	2.45	11.30	2.48	11.54	2.50	12.00	2.54	12.47	2.59
							23	9.98	2.42	10.43	2.47	10.88	2.51	11.11	2.54	11.35	2.56	11.81	2.61	12.29	2.65
							25	9.79	2.49	10.24	2.53	10.69	2.58	10.92	2.60	11.16	2.62	11.62	2.67	12.10	2.71
							27	9.60	2.55	10.05	2.59	10.50	2.64	10.73	2.66	10.97	2.69	11.44	2.73	11.91	2.78
							29	9.41	2.61	9.86	2.66	10.32	2.70	10.55	2.73	10.78	2.75	11.25	2.80	11.72	2.84
							31	9.22	2.68	9.67	2.72	10.13	2.77	10.36	2.79	10.59	2.82	11.06	2.86	11.54	2.91
							33	9.03	2.74	9.48	2.79	9.94	2.84	10.17	2.86	10.40	2.88	10.87	2.93	11.35	2.98
							35	8.84	2.81	9.29	2.86	9.75	2.90	10.00	2.92	10.22	2.95	10.69	3.00	11.17	3.04
							37	8.65	2.88	9.10	2.92	9.56	2.97	9.79	2.99	10.03	3.02	10.50	3.07	10.98	3.11
							39	8.46	2.94	8.92	2.99	9.38	3.04	9.61	3.06	9.84	3.09	10.32	3.14	10.80	3.18
							42	8.18	3.05	8.63	3.10	9.10	3.15	9.33	3.17	9.56	3.19	10.04	3.24	10.52	3.29
							44	7.99	3.12	8.45	3.17	8.91	3.22	9.14	3.24	9.38	3.27	9.86	3.31	10.34	3.36
							46	7.80	3.19	8.26	3.24	8.73	3.29	8.96	3.31	9.20	3.34	9.67	3.39	10.16	3.44

12. Capacity Table

12-5. AJ100TXJ5KH/EA

COOLING

Combination (Capacity Index)					Combination (Total)	Combination (%)	Outdoor Temperature (°C,DB)	Indoor Temperature (°C, WB)													
								14		16		18		19		20		22		24	
								TC(kW)	PI(kW)	TC(kW)	PI(kW)	TC(kW)	PI(kW)	TC(kW)	PI(kW)	TC(kW)	PI(kW)	TC(kW)	PI(kW)	TC(kW)	PI(kW)
2000	3500	3500	3500	3500	16000	160%	10	11.24	2.01	11.69	2.05	12.13	2.09	12.36	2.11	12.59	2.14	13.05	2.18	13.52	2.22
							12	11.05	2.06	11.49	2.10	11.94	2.15	12.17	2.17	12.40	2.19	12.86	2.23	13.33	2.28
							14	10.85	2.12	11.30	2.16	11.75	2.20	11.97	2.22	12.20	2.25	12.67	2.29	13.14	2.33
							16	10.66	2.17	11.10	2.21	11.55	2.26	11.78	2.28	12.01	2.30	12.48	2.35	12.95	2.39
							18	10.47	2.23	10.91	2.27	11.36	2.32	11.59	2.34	11.82	2.36	12.29	2.40	12.76	2.45
							20	10.27	2.29	10.72	2.33	11.17	2.37	11.40	2.40	11.63	2.42	12.10	2.46	12.57	2.51
							21	10.18	2.31	10.62	2.36	11.08	2.40	11.30	2.43	11.54	2.45	12.00	2.49	12.47	2.54
							23	9.98	2.37	10.43	2.42	10.88	2.46	11.11	2.49	11.35	2.51	11.81	2.55	12.29	2.60
							25	9.79	2.43	10.24	2.48	10.69	2.52	10.92	2.55	11.16	2.57	11.62	2.61	12.10	2.66
							27	9.60	2.50	10.05	2.54	10.50	2.59	10.73	2.61	10.97	2.63	11.44	2.68	11.91	2.72
							29	9.41	2.56	9.86	2.60	10.32	2.65	10.55	2.67	10.78	2.69	11.25	2.74	11.72	2.79
							31	9.22	2.62	9.67	2.67	10.13	2.71	10.36	2.74	10.59	2.76	11.06	2.80	11.54	2.85
							33	9.03	2.69	9.48	2.73	9.94	2.78	10.17	2.80	10.40	2.82	10.87	2.87	11.35	2.92
							35	8.84	2.75	9.29	2.80	9.75	2.84	10.00	2.86	10.22	2.89	10.69	2.94	11.17	2.98
							37	8.65	2.82	9.10	2.86	9.56	2.91	9.79	2.93	10.03	2.96	10.50	3.00	10.98	3.05
							39	8.46	2.88	8.92	2.93	9.38	2.98	9.61	3.00	9.84	3.02	10.32	3.07	10.80	3.12
							42	8.18	2.99	8.63	3.03	9.10	3.08	9.33	3.10	9.56	3.13	10.04	3.18	10.52	3.22
							44	7.99	3.06	8.45	3.10	8.91	3.15	9.14	3.18	9.38	3.20	9.86	3.25	10.34	3.29
							46	7.80	3.13	8.26	3.17	8.73	3.22	8.96	3.25	9.20	3.27	9.67	3.32	10.16	3.37
2500	2500	2500	2500	2500	12500	125%	10	8.84	2.04	12.47	2.09	12.70	2.14	12.84	2.16	13.00	2.19	13.37	2.23	13.79	2.28
							12	8.84	2.09	12.13	2.14	12.38	2.19	12.53	2.21	12.70	2.24	13.08	2.28	13.52	2.33
							14	8.84	2.14	11.80	2.19	12.07	2.24	12.23	2.27	12.41	2.29	12.80	2.34	13.27	2.38
							16	8.84	2.20	11.49	2.25	11.78	2.30	11.95	2.32	12.13	2.34	12.54	2.39	13.02	2.43
							18	8.84	2.25	11.19	2.30	11.50	2.35	11.67	2.37	11.87	2.40	12.30	2.44	12.80	2.49
							20	8.84	2.31	10.91	2.36	11.23	2.41	11.42	2.43	11.62	2.46	12.07	2.50	12.58	2.54
							21	8.84	2.34	10.77	2.39	11.10	2.44	11.29	2.46	11.50	2.48	11.96	2.53	12.48	2.57
							23	8.84	2.40	10.51	2.45	10.86	2.50	11.06	2.52	11.27	2.54	11.75	2.59	12.29	2.63
							25	8.84	2.46	10.26	2.51	10.63	2.56	10.83	2.58	11.06	2.60	11.55	2.65	12.11	2.69
							27	8.84	2.52	10.03	2.57	10.41	2.62	10.62	2.64	10.86	2.67	11.37	2.71	11.94	2.75
							29	8.84	2.59	9.81	2.64	10.20	2.68	10.43	2.71	10.67	2.73	11.20	2.77	11.79	2.82
							31	8.84	2.65	9.60	2.70	10.02	2.75	10.25	2.77	10.50	2.79	11.04	2.84	11.65	2.88
							33	8.84	2.72	9.40	2.77	9.84	2.82	10.08	2.84	10.34	2.86	10.90	2.91	11.53	2.95
							35	8.84	2.79	9.23	2.84	9.68	2.88	10.00	2.90	10.19	2.93	10.77	2.97	11.41	3.02
							37	8.84	2.86	9.06	2.91	9.53	2.95	9.79	2.98	10.06	3.00	10.66	3.04	11.32	3.09
							39	8.84	2.93	8.91	2.98	9.39	3.03	9.66	3.05	9.94	3.07	10.56	3.11	11.24	3.16
							42	8.84	3.04	8.71	3.09	9.22	3.14	9.50	3.16	9.80	3.18	10.43	3.22	11.14	3.27
							44	8.84	3.12	8.59	3.16	9.12	3.21	9.41	3.23	9.71	3.26	10.37	3.30	11.09	3.34
							46	8.84	3.19	8.49	3.24	9.03	3.29	9.33	3.31	9.64	3.33	10.32	3.38	11.06	3.42

12. Capacity Table

12-5. AJ100TXJ5KH/EA

COOLING

Combination (Capacity Index)					Combination (Total)	Combination (%)	Outdoor Temperature (°C,DB)	Indoor Temperature (°C, WB)													
								14		16		18		19		20		22		24	
								TC(kW)	PI(kW)	TC(kW)	PI(kW)	TC(kW)	PI(kW)	TC(kW)	PI(kW)	TC(kW)	PI(kW)	TC(kW)	PI(kW)	TC(kW)	PI(kW)
2500	2500	2500	2500	3500	13500	135%	10	11.24	1.99	11.69	2.04	12.13	2.08	12.36	2.10	12.59	2.12	13.05	2.16	13.52	2.21
							12	11.05	2.05	11.49	2.09	11.94	2.13	12.17	2.15	12.40	2.17	12.86	2.22	13.33	2.26
							14	10.85	2.10	11.30	2.14	11.75	2.19	11.97	2.21	12.20	2.23	12.67	2.27	13.14	2.32
							16	10.66	2.16	11.10	2.20	11.55	2.24	11.78	2.26	12.01	2.29	12.48	2.33	12.95	2.37
							18	10.47	2.21	10.91	2.26	11.36	2.30	11.59	2.32	11.82	2.34	12.29	2.39	12.76	2.43
							20	10.27	2.27	10.72	2.31	11.17	2.36	11.40	2.38	11.63	2.40	12.10	2.45	12.57	2.49
							21	10.18	2.30	10.62	2.34	11.08	2.39	11.30	2.41	11.54	2.43	12.00	2.47	12.47	2.52
							23	9.98	2.36	10.43	2.40	10.88	2.45	11.11	2.47	11.35	2.49	11.81	2.53	12.29	2.58
							25	9.79	2.42	10.24	2.46	10.69	2.51	10.92	2.53	11.16	2.55	11.62	2.60	12.10	2.64
							27	9.60	2.48	10.05	2.52	10.50	2.57	10.73	2.59	10.97	2.61	11.44	2.66	11.91	2.70
							29	9.41	2.54	9.86	2.58	10.32	2.63	10.55	2.65	10.78	2.68	11.25	2.72	11.72	2.77
							31	9.22	2.60	9.67	2.65	10.13	2.69	10.36	2.72	10.59	2.74	11.06	2.78	11.54	2.83
							33	9.03	2.67	9.48	2.71	9.94	2.76	10.17	2.78	10.40	2.80	10.87	2.85	11.35	2.89
							35	8.84	2.73	9.29	2.78	9.75	2.82	10.00	2.84	10.22	2.87	10.69	2.92	11.17	2.96
							37	8.65	2.80	9.10	2.84	9.56	2.89	9.79	2.91	10.03	2.94	10.50	2.98	10.98	3.03
							39	8.46	2.86	8.92	2.91	9.38	2.96	9.61	2.98	9.84	3.00	10.32	3.05	10.80	3.10
							42	8.18	2.97	8.63	3.01	9.10	3.06	9.33	3.08	9.56	3.11	10.04	3.15	10.52	3.20
							44	7.99	3.03	8.45	3.08	8.91	3.13	9.14	3.15	9.38	3.18	9.86	3.22	10.34	3.27
							46	7.80	3.11	8.26	3.15	8.73	3.20	8.96	3.22	9.20	3.25	9.67	3.30	10.16	3.34
2500	2500	2500	2500	5000	15000	150%	10	11.24	1.97	11.69	2.01	12.13	2.06	12.36	2.08	12.59	2.10	13.05	2.14	13.52	2.18
							12	11.05	2.02	11.49	2.07	11.94	2.11	12.17	2.13	12.40	2.15	12.86	2.19	13.33	2.24
							14	10.85	2.08	11.30	2.12	11.75	2.16	11.97	2.18	12.20	2.21	12.67	2.25	13.14	2.29
							16	10.66	2.13	11.10	2.18	11.55	2.22	11.78	2.24	12.01	2.26	12.48	2.30	12.95	2.35
							18	10.47	2.19	10.91	2.23	11.36	2.27	11.59	2.30	11.82	2.32	12.29	2.36	12.76	2.40
							20	10.27	2.25	10.72	2.29	11.17	2.33	11.40	2.35	11.63	2.38	12.10	2.42	12.57	2.46
							21	10.18	2.27	10.62	2.32	11.08	2.36	11.30	2.38	11.54	2.40	12.00	2.45	12.47	2.49
							23	9.98	2.33	10.43	2.38	10.88	2.42	11.11	2.44	11.35	2.46	11.81	2.51	12.29	2.55
							25	9.79	2.39	10.24	2.44	10.69	2.48	10.92	2.50	11.16	2.52	11.62	2.57	12.10	2.61
							27	9.60	2.45	10.05	2.50	10.50	2.54	10.73	2.56	10.97	2.58	11.44	2.63	11.91	2.67
							29	9.41	2.51	9.86	2.56	10.32	2.60	10.55	2.62	10.78	2.65	11.25	2.69	11.72	2.74
							31	9.22	2.57	9.67	2.62	10.13	2.66	10.36	2.69	10.59	2.71	11.06	2.75	11.54	2.80
							33	9.03	2.64	9.48	2.68	9.94	2.73	10.17	2.75	10.40	2.77	10.87	2.82	11.35	2.86
							35	8.84	2.70	9.29	2.75	9.75	2.79	10.00	2.81	10.22	2.84	10.69	2.88	11.17	2.93
							37	8.65	2.77	9.10	2.81	9.56	2.86	9.79	2.88	10.03	2.90	10.50	2.95	10.98	3.00
							39	8.46	2.83	8.92	2.88	9.38	2.93	9.61	2.95	9.84	2.97	10.32	3.02	10.80	3.06
							42	8.18	2.93	8.63	2.98	9.10	3.03	9.33	3.05	9.56	3.07	10.04	3.12	10.52	3.17
							44	7.99	3.00	8.45	3.05	8.91	3.10	9.14	3.12	9.38	3.14	9.86	3.19	10.34	3.24
							46	7.80	3.07	8.26	3.12	8.73	3.17	8.96	3.19	9.20	3.21	9.67	3.26	10.16	3.31

12. Capacity Table

12-5. AJ100TXJ5KH/EA

COOLING

Combination (Capacity Index)					Combination (Total)	Combination (%)	Outdoor Temperature (°C,DB)	Indoor Temperature (°C, WB)													
								14		16		18		19		20		22		24	
								TC(kW)	PI(kW)	TC(kW)	PI(kW)	TC(kW)	PI(kW)	TC(kW)	PI(kW)	TC(kW)	PI(kW)	TC(kW)	PI(kW)	TC(kW)	PI(kW)
2500	2500	2500	2500	6800	16800	168%	10	11.24	2.06	11.69	2.10	12.13	2.14	12.36	2.17	12.59	2.19	13.05	2.23	13.52	2.27
							12	11.05	2.11	11.49	2.15	11.94	2.20	12.17	2.22	12.40	2.24	12.86	2.29	13.33	2.33
							14	10.85	2.17	11.30	2.21	11.75	2.26	11.97	2.28	12.20	2.30	12.67	2.34	13.14	2.39
							16	10.66	2.22	11.10	2.27	11.55	2.31	11.78	2.34	12.01	2.36	12.48	2.40	12.95	2.45
							18	10.47	2.28	10.91	2.33	11.36	2.37	11.59	2.39	11.82	2.42	12.29	2.46	12.76	2.51
							20	10.27	2.34	10.72	2.39	11.17	2.43	11.40	2.45	11.63	2.48	12.10	2.52	12.57	2.57
							21	10.18	2.37	10.62	2.42	11.08	2.46	11.30	2.48	11.54	2.51	12.00	2.55	12.47	2.60
							23	9.98	2.43	10.43	2.48	10.88	2.52	11.11	2.55	11.35	2.57	11.81	2.61	12.29	2.66
							25	9.79	2.49	10.24	2.54	10.69	2.59	10.92	2.61	11.16	2.63	11.62	2.68	12.10	2.72
							27	9.60	2.56	10.05	2.60	10.50	2.65	10.73	2.67	10.97	2.70	11.44	2.74	11.91	2.79
							29	9.41	2.62	9.86	2.67	10.32	2.71	10.55	2.74	10.78	2.76	11.25	2.81	11.72	2.85
							31	9.22	2.68	9.67	2.73	10.13	2.78	10.36	2.80	10.59	2.83	11.06	2.87	11.54	2.92
							33	9.03	2.75	9.48	2.80	9.94	2.85	10.17	2.87	10.40	2.89	10.87	2.94	11.35	2.99
							35	8.84	2.82	9.29	2.87	9.75	2.91	10.00	2.93	10.22	2.96	10.69	3.01	11.17	3.06
							37	8.65	2.89	9.10	2.93	9.56	2.98	9.79	3.00	10.03	3.03	10.50	3.08	10.98	3.12
							39	8.46	2.95	8.92	3.00	9.38	3.05	9.61	3.07	9.84	3.10	10.32	3.15	10.80	3.19
							42	8.18	3.06	8.63	3.11	9.10	3.16	9.33	3.18	9.56	3.21	10.04	3.25	10.52	3.30
							44	7.99	3.13	8.45	3.18	8.91	3.23	9.14	3.25	9.38	3.28	9.86	3.33	10.34	3.37
							46	7.80	3.20	8.26	3.25	8.73	3.30	8.96	3.33	9.20	3.35	9.67	3.40	10.16	3.45
2500	2500	2500	3500	3500	14500	145%	10	11.24	1.96	11.69	2.01	12.13	2.05	12.36	2.07	12.59	2.09	13.05	2.13	13.52	2.17
							12	11.05	2.02	11.49	2.06	11.94	2.10	12.17	2.12	12.40	2.14	12.86	2.19	13.33	2.23
							14	10.85	2.07	11.30	2.11	11.75	2.16	11.97	2.18	12.20	2.20	12.67	2.24	13.14	2.28
							16	10.66	2.13	11.10	2.17	11.55	2.21	11.78	2.23	12.01	2.25	12.48	2.30	12.95	2.34
							18	10.47	2.18	10.91	2.22	11.36	2.27	11.59	2.29	11.82	2.31	12.29	2.35	12.76	2.40
							20	10.27	2.24	10.72	2.28	11.17	2.32	11.40	2.35	11.63	2.37	12.10	2.41	12.57	2.45
							21	10.18	2.27	10.62	2.31	11.08	2.35	11.30	2.37	11.54	2.40	12.00	2.44	12.47	2.48
							23	9.98	2.32	10.43	2.37	10.88	2.41	11.11	2.43	11.35	2.46	11.81	2.50	12.29	2.54
							25	9.79	2.38	10.24	2.43	10.69	2.47	10.92	2.49	11.16	2.51	11.62	2.56	12.10	2.60
							27	9.60	2.44	10.05	2.49	10.50	2.53	10.73	2.55	10.97	2.58	11.44	2.62	11.91	2.66
							29	9.41	2.50	9.86	2.55	10.32	2.59	10.55	2.62	10.78	2.64	11.25	2.68	11.72	2.73
							31	9.22	2.57	9.67	2.61	10.13	2.66	10.36	2.68	10.59	2.70	11.06	2.75	11.54	2.79
							33	9.03	2.63	9.48	2.67	9.94	2.72	10.17	2.74	10.40	2.76	10.87	2.81	11.35	2.85
							35	8.84	2.69	9.29	2.74	9.75	2.78	10.00	2.80	10.22	2.83	10.69	2.87	11.17	2.92
							37	8.65	2.76	9.10	2.80	9.56	2.85	9.79	2.87	10.03	2.89	10.50	2.94	10.98	2.99
							39	8.46	2.82	8.92	2.87	9.38	2.92	9.61	2.94	9.84	2.96	10.32	3.01	10.80	3.05
							42	8.18	2.92	8.63	2.97	9.10	3.02	9.33	3.04	9.56	3.06	10.04	3.11	10.52	3.16
							44	7.99	2.99	8.45	3.04	8.91	3.09	9.14	3.11	9.38	3.13	9.86	3.18	10.34	3.23
							46	7.80	3.06	8.26	3.11	8.73	3.16	8.96	3.18	9.20	3.20	9.67	3.25	10.16	3.30

12. Capacity Table

12-5. AJ100TXJ5KH/EA

COOLING

Combination (Capacity Index)					Combination (Total)	Combination (%)	Outdoor Temperature (°C,DB)	Indoor Temperature (°C, WB)													
								14		16		18		19		20		22		24	
								TC(kW)	PI(kW)	TC(kW)	PI(kW)	TC(kW)	PI(kW)	TC(kW)	PI(kW)	TC(kW)	PI(kW)	TC(kW)	PI(kW)	TC(kW)	PI(kW)
2500	2500	2500	3500	5000	16000	160%	10	11.24	2.01	11.69	2.05	12.13	2.09	12.36	2.11	12.59	2.14	13.05	2.18	13.52	2.22
							12	11.05	2.06	11.49	2.10	11.94	2.15	12.17	2.17	12.40	2.19	12.86	2.23	13.33	2.28
							14	10.85	2.12	11.30	2.16	11.75	2.20	11.97	2.22	12.20	2.25	12.67	2.29	13.14	2.33
							16	10.66	2.17	11.10	2.21	11.55	2.26	11.78	2.28	12.01	2.30	12.48	2.35	12.95	2.39
							18	10.47	2.23	10.91	2.27	11.36	2.32	11.59	2.34	11.82	2.36	12.29	2.40	12.76	2.45
							20	10.27	2.29	10.72	2.33	11.17	2.37	11.40	2.40	11.63	2.42	12.10	2.46	12.57	2.51
							21	10.18	2.31	10.62	2.36	11.08	2.40	11.30	2.43	11.54	2.45	12.00	2.49	12.47	2.54
							23	9.98	2.37	10.43	2.42	10.88	2.46	11.11	2.49	11.35	2.51	11.81	2.55	12.29	2.60
							25	9.79	2.43	10.24	2.48	10.69	2.52	10.92	2.55	11.16	2.57	11.62	2.61	12.10	2.66
							27	9.60	2.50	10.05	2.54	10.50	2.59	10.73	2.61	10.97	2.63	11.44	2.68	11.91	2.72
							29	9.41	2.56	9.86	2.60	10.32	2.65	10.55	2.67	10.78	2.69	11.25	2.74	11.72	2.79
							31	9.22	2.62	9.67	2.67	10.13	2.71	10.36	2.74	10.59	2.76	11.06	2.80	11.54	2.85
							33	9.03	2.69	9.48	2.73	9.94	2.78	10.17	2.80	10.40	2.82	10.87	2.87	11.35	2.92
							35	8.84	2.75	9.29	2.80	9.75	2.84	10.00	2.86	10.22	2.89	10.69	2.94	11.17	2.98
							37	8.65	2.82	9.10	2.86	9.56	2.91	9.79	2.93	10.03	2.96	10.50	3.00	10.98	3.05
							39	8.46	2.88	8.92	2.93	9.38	2.98	9.61	3.00	9.84	3.02	10.32	3.07	10.80	3.12
							42	8.18	2.99	8.63	3.03	9.10	3.08	9.33	3.10	9.56	3.13	10.04	3.18	10.52	3.22
							44	7.99	3.06	8.45	3.10	8.91	3.15	9.14	3.18	9.38	3.20	9.86	3.25	10.34	3.29
							46	7.80	3.13	8.26	3.17	8.73	3.22	8.96	3.25	9.20	3.27	9.67	3.32	10.16	3.37
2500	2500	3500	3500	3500	15500	155%	10	11.24	2.00	11.69	2.04	12.13	2.08	12.36	2.11	12.59	2.13	13.05	2.17	13.52	2.21
							12	11.05	2.05	11.49	2.10	11.94	2.14	12.17	2.16	12.40	2.18	12.86	2.22	13.33	2.27
							14	10.85	2.11	11.30	2.15	11.75	2.19	11.97	2.22	12.20	2.24	12.67	2.28	13.14	2.32
							16	10.66	2.16	11.10	2.21	11.55	2.25	11.78	2.27	12.01	2.29	12.48	2.34	12.95	2.38
							18	10.47	2.22	10.91	2.26	11.36	2.31	11.59	2.33	11.82	2.35	12.29	2.39	12.76	2.44
							20	10.27	2.28	10.72	2.32	11.17	2.37	11.40	2.39	11.63	2.41	12.10	2.45	12.57	2.50
							21	10.18	2.31	10.62	2.35	11.08	2.39	11.30	2.42	11.54	2.44	12.00	2.48	12.47	2.53
							23	9.98	2.37	10.43	2.41	10.88	2.45	11.11	2.48	11.35	2.50	11.81	2.54	12.29	2.59
							25	9.79	2.43	10.24	2.47	10.69	2.52	10.92	2.54	11.16	2.56	11.62	2.60	12.10	2.65
							27	9.60	2.49	10.05	2.53	10.50	2.58	10.73	2.60	10.97	2.62	11.44	2.67	11.91	2.71
							29	9.41	2.55	9.86	2.59	10.32	2.64	10.55	2.66	10.78	2.68	11.25	2.73	11.72	2.78
							31	9.22	2.61	9.67	2.66	10.13	2.70	10.36	2.73	10.59	2.75	11.06	2.79	11.54	2.84
							33	9.03	2.68	9.48	2.72	9.94	2.77	10.17	2.79	10.40	2.81	10.87	2.86	11.35	2.91
							35	8.84	2.74	9.29	2.79	9.75	2.83	10.00	2.85	10.22	2.88	10.69	2.93	11.17	2.97
							37	8.65	2.81	9.10	2.85	9.56	2.90	9.79	2.92	10.03	2.95	10.50	2.99	10.98	3.04
							39	8.46	2.87	8.92	2.92	9.38	2.97	9.61	2.99	9.84	3.01	10.32	3.06	10.80	3.11
							42	8.18	2.98	8.63	3.02	9.10	3.07	9.33	3.09	9.56	3.12	10.04	3.16	10.52	3.21
							44	7.99	3.05	8.45	3.09	8.91	3.14	9.14	3.16	9.38	3.19	9.86	3.24	10.34	3.28
							46	7.80	3.12	8.26	3.16	8.73	3.21	8.96	3.24	9.20	3.26	9.67	3.31	10.16	3.35

12. Capacity Table

12-5. AJ100TXJ5KH/EA

COOLING

Combination (Capacity Index)					Combination (Total)	Combination (%)	Outdoor Temperature (°C,DB)	Indoor Temperature (°C, WB)													
								14		16		18		19		20		22		24	
								TC(kW)	PI(kW)	TC(kW)	PI(kW)	TC(kW)	PI(kW)	TC(kW)	PI(kW)	TC(kW)	PI(kW)	TC(kW)	PI(kW)	TC(kW)	PI(kW)
2500	2500	3500	3500	5000	17000	170%	10	11.24	2.05	11.69	2.09	12.13	2.14	12.36	2.16	12.59	2.18	13.05	2.22	13.52	2.27
							12	11.05	2.10	11.49	2.15	11.94	2.19	12.17	2.21	12.40	2.24	12.86	2.28	13.33	2.32
							14	10.85	2.16	11.30	2.20	11.75	2.25	11.97	2.27	12.20	2.29	12.67	2.34	13.14	2.38
							16	10.66	2.22	11.10	2.26	11.55	2.31	11.78	2.33	12.01	2.35	12.48	2.39	12.95	2.44
							18	10.47	2.27	10.91	2.32	11.36	2.36	11.59	2.39	11.82	2.41	12.29	2.45	12.76	2.50
							20	10.27	2.33	10.72	2.38	11.17	2.42	11.40	2.45	11.63	2.47	12.10	2.51	12.57	2.56
							21	10.18	2.36	10.62	2.41	11.08	2.45	11.30	2.48	11.54	2.50	12.00	2.54	12.47	2.59
							23	9.98	2.42	10.43	2.47	10.88	2.51	11.11	2.54	11.35	2.56	11.81	2.61	12.29	2.65
							25	9.79	2.49	10.24	2.53	10.69	2.58	10.92	2.60	11.16	2.62	11.62	2.67	12.10	2.71
							27	9.60	2.55	10.05	2.59	10.50	2.64	10.73	2.66	10.97	2.69	11.44	2.73	11.91	2.78
							29	9.41	2.61	9.86	2.66	10.32	2.70	10.55	2.73	10.78	2.75	11.25	2.80	11.72	2.84
							31	9.22	2.68	9.67	2.72	10.13	2.77	10.36	2.79	10.59	2.82	11.06	2.86	11.54	2.91
							33	9.03	2.74	9.48	2.79	9.94	2.84	10.17	2.86	10.40	2.88	10.87	2.93	11.35	2.98
							35	8.84	2.81	9.29	2.86	9.75	2.90	10.00	2.92	10.22	2.95	10.69	3.00	11.17	3.04
							37	8.65	2.88	9.10	2.92	9.56	2.97	9.79	2.99	10.03	3.02	10.50	3.07	10.98	3.11
							39	8.46	2.94	8.92	2.99	9.38	3.04	9.61	3.06	9.84	3.09	10.32	3.14	10.80	3.18
							42	8.18	3.05	8.63	3.10	9.10	3.15	9.33	3.17	9.56	3.19	10.04	3.24	10.52	3.29
							44	7.99	3.12	8.45	3.17	8.91	3.22	9.14	3.24	9.38	3.27	9.86	3.31	10.34	3.36
							46	7.80	3.19	8.26	3.24	8.73	3.29	8.96	3.31	9.20	3.34	9.67	3.39	10.16	3.44
2500	3500	3500	3500	3500	16500	165%	10	11.24	2.04	11.69	2.09	12.13	2.13	12.36	2.15	12.59	2.17	13.05	2.22	13.52	2.26
							12	11.05	2.10	11.49	2.14	11.94	2.18	12.17	2.21	12.40	2.23	12.86	2.27	13.33	2.32
							14	10.85	2.15	11.30	2.20	11.75	2.24	11.97	2.26	12.20	2.28	12.67	2.33	13.14	2.37
							16	10.66	2.21	11.10	2.25	11.55	2.30	11.78	2.32	12.01	2.34	12.48	2.39	12.95	2.43
							18	10.47	2.27	10.91	2.31	11.36	2.36	11.59	2.38	11.82	2.40	12.29	2.45	12.76	2.49
							20	10.27	2.33	10.72	2.37	11.17	2.42	11.40	2.44	11.63	2.46	12.10	2.51	12.57	2.55
							21	10.18	2.36	10.62	2.40	11.08	2.45	11.30	2.47	11.54	2.49	12.00	2.54	12.47	2.58
							23	9.98	2.42	10.43	2.46	10.88	2.51	11.11	2.53	11.35	2.55	11.81	2.60	12.29	2.64
							25	9.79	2.48	10.24	2.52	10.69	2.57	10.92	2.59	11.16	2.61	11.62	2.66	12.10	2.71
							27	9.60	2.54	10.05	2.58	10.50	2.63	10.73	2.65	10.97	2.68	11.44	2.72	11.91	2.77
							29	9.41	2.60	9.86	2.65	10.32	2.69	10.55	2.72	10.78	2.74	11.25	2.79	11.72	2.83
							31	9.22	2.67	9.67	2.71	10.13	2.76	10.36	2.78	10.59	2.81	11.06	2.85	11.54	2.90
							33	9.03	2.73	9.48	2.78	9.94	2.83	10.17	2.85	10.40	2.87	10.87	2.92	11.35	2.97
							35	8.84	2.80	9.29	2.85	9.75	2.89	10.00	2.91	10.22	2.94	10.69	2.99	11.17	3.03
							37	8.65	2.87	9.10	2.91	9.56	2.96	9.79	2.98	10.03	3.01	10.50	3.06	10.98	3.10
							39	8.46	2.93	8.92	2.98	9.38	3.03	9.61	3.05	9.84	3.08	10.32	3.13	10.80	3.17
							42	8.18	3.04	8.63	3.09	9.10	3.14	9.33	3.16	9.56	3.18	10.04	3.23	10.52	3.28
							44	7.99	3.11	8.45	3.16	8.91	3.21	9.14	3.23	9.38	3.26	9.86	3.30	10.34	3.35
							46	7.80	3.18	8.26	3.23	8.73	3.28	8.96	3.30	9.20	3.33	9.67	3.38	10.16	3.43

NOTE

1. Cooling capacity is based on 27°CDB / 19°CWB (indoor temperature), 35°CDB (outdoor temperature).
2. Heating capacity is based on 20°CDB (indoor temperature), 7°CDB/6°CWB (outdoor temperature).
3. The above is the value for connecting with the following indoor units.
   - AJ***TNAPKH : Premium Wind Free
4. Capacities are based on the following conditions:
   - Corresponding refrigerant piping length : 5m / - Level difference : 0m
5. The total ability of connected a indoor unit is up to 17.3kW
6. It is impossible to connect the indoor unit for one room only.
7. This data is reference data for temperature capacity trend.

12. Capacity Table

12-5. AJ100TXJ5KH/EA

HEATING

Combination (Capacity Index)					Combination (Total)	Combination (%)	Outdoor Temperature (°C,DB)	Indoor Temperature (°C, DB)													
								14		16		18		20		21		22		24	
								TC(kW)	PI(kW)	TC(kW)	PI(kW)	TC(kW)	PI(kW)	TC(kW)	PI(kW)	TC(kW)	PI(kW)	TC(kW)	PI(kW)	TC(kW)	PI(kW)
2000					2000	20%	-15	1.26	1.34	1.22	1.36	1.18	1.38	1.17	1.39	1.15	1.40	1.13	1.41	1.11	1.42
							-10	1.51	1.41	1.47	1.43	1.43	1.45	1.41	1.46	1.40	1.47	1.37	1.49	1.34	1.50
							-5	1.76	1.48	1.71	1.51	1.67	1.53	1.66	1.53	1.64	1.54	1.61	1.56	1.58	1.57
							0	2.01	1.55	1.96	1.58	1.92	1.60	1.90	1.61	1.88	1.62	1.85	1.63	1.82	1.65
							2	2.11	1.58	2.06	1.60	2.02	1.63	2.00	1.64	1.98	1.64	1.95	1.66	1.92	1.68
							7	2.31	1.64	2.26	1.66	2.21	1.68	2.20	1.69	2.17	1.70	2.14	1.72	2.11	1.74
							10	2.51	1.69	2.46	1.72	2.41	1.74	2.39	1.75	2.37	1.76	2.33	1.78	2.30	1.80
							15	2.76	1.76	2.71	1.78	2.66	1.81	2.64	1.82	2.61	1.83	2.57	1.85	2.54	1.87
2500					2500	25%	-15	1.83	1.49	1.77	1.52	1.72	1.54	1.70	1.55	1.68	1.55	1.64	1.57	1.61	1.58
							-10	2.19	1.57	2.13	1.60	2.08	1.62	2.05	1.63	2.03	1.64	1.99	1.65	1.95	1.67
							-5	2.56	1.65	2.49	1.67	2.44	1.70	2.41	1.71	2.38	1.72	2.34	1.73	2.30	1.75
							0	2.92	1.73	2.85	1.75	2.79	1.78	2.76	1.79	2.74	1.80	2.69	1.82	2.65	1.83
							2	3.07	1.76	3.00	1.78	2.94	1.81	2.91	1.82	2.88	1.83	2.83	1.85	2.79	1.87
							7	3.36	1.82	3.29	1.85	3.22	1.87	3.20	1.88	3.16	1.89	3.11	1.91	3.07	1.93
							10	3.65	1.88	3.58	1.91	3.51	1.93	3.48	1.95	3.45	1.96	3.39	1.98	3.34	2.00
							15	4.02	1.96	3.94	1.98	3.87	2.01	3.83	2.02	3.80	2.04	3.74	2.06	3.69	2.08
3500					3500	35%	-15	2.29	1.73	2.22	1.76	2.15	1.78	2.13	1.79	2.10	1.80	2.05	1.82	2.01	1.83
							-10	2.74	1.82	2.67	1.85	2.60	1.88	2.57	1.89	2.54	1.90	2.49	1.92	2.44	1.93
							-5	3.20	1.91	3.12	1.94	3.04	1.97	3.01	1.98	2.98	1.99	2.92	2.01	2.88	2.03
							0	3.65	2.00	3.57	2.03	3.49	2.06	3.46	2.07	3.42	2.08	3.36	2.11	3.31	2.12
							2	3.83	2.04	3.75	2.07	3.67	2.10	3.63	2.11	3.60	2.12	3.54	2.14	3.48	2.16
							7	4.20	2.11	4.11	2.14	4.03	2.17	4.00	2.18	3.95	2.20	3.89	2.22	3.83	2.24
							10	4.56	2.18	4.47	2.21	4.38	2.24	4.35	2.26	4.31	2.27	4.24	2.29	4.18	2.32
							15	5.02	2.27	4.92	2.30	4.83	2.33	4.79	2.35	4.75	2.36	4.68	2.39	4.62	2.41
5000					5000	50%	-15	3.43	2.24	3.33	2.28	3.23	2.30	3.19	2.32	3.15	2.33	3.08	2.35	3.02	2.37
							-10	4.11	2.36	4.00	2.39	3.90	2.43	3.85	2.44	3.81	2.45	3.73	2.48	3.67	2.50
							-5	4.80	2.48	4.67	2.51	4.57	2.55	4.52	2.56	4.47	2.58	4.39	2.60	4.31	2.62
							0	5.48	2.59	5.35	2.63	5.24	2.66	5.18	2.68	5.13	2.70	5.04	2.72	4.97	2.75
							2	5.75	2.64	5.62	2.68	5.50	2.71	5.45	2.73	5.40	2.74	5.31	2.77	5.23	2.80
							7	6.30	2.73	6.16	2.77	6.04	2.81	6.00	2.82	5.93	2.84	5.83	2.87	5.75	2.90
							10	6.84	2.82	6.70	2.86	6.58	2.90	6.52	2.92	6.46	2.94	6.36	2.97	6.27	3.00
							15	7.53	2.93	7.38	2.98	7.25	3.02	7.19	3.04	7.13	3.05	7.02	3.09	6.92	3.12
6800					6800	68%	-15	4.58	2.58	4.44	2.62	4.31	2.66	4.25	2.67	4.20	2.69	4.10	2.71	4.02	2.73
							-10	5.49	2.72	5.33	2.76	5.20	2.80	5.14	2.81	5.08	2.83	4.97	2.86	4.89	2.88
							-5	6.39	2.85	6.23	2.90	6.09	2.93	6.02	2.95	5.96	2.97	5.85	3.00	5.75	3.02
							0	7.30	2.99	7.13	3.03	6.98	3.07	6.91	3.09	6.84	3.11	6.72	3.14	6.62	3.17
							2	7.67	3.04	7.49	3.08	7.34	3.13	7.27	3.15	7.20	3.16	7.07	3.20	6.97	3.23
							7	8.40	3.14	8.22	3.19	8.05	3.23	8.00	3.25	7.91	3.27	7.78	3.31	7.66	3.34
							10	9.12	3.25	8.94	3.30	8.77	3.34	8.69	3.36	8.62	3.38	8.48	3.42	8.36	3.45
							15	10.04	3.38	9.84	3.43	9.67	3.48	9.58	3.50	9.51	3.52	9.36	3.56	9.23	3.59

12. Capacity Table

12-5. AJ100TXJ5KH/EA

HEATING

Combination (Capacity Index)					Combination (Total)	Combination (%)	Outdoor Temperature (°C,DB)	Indoor Temperature (°C, DB)													
								14		16		18		20		21		22		24	
								TC(kW)	PI(kW)	TC(kW)	PI(kW)	TC(kW)	PI(kW)	TC(kW)	PI(kW)	TC(kW)	PI(kW)	TC(kW)	PI(kW)	TC(kW)	PI(kW)
2000	2000				4000	40%	-15	2.52	0.99	2.44	1.01	2.37	1.02	2.34	1.03	2.31	1.03	2.26	1.04	2.21	1.05
							-10	3.02	1.05	2.93	1.06	2.86	1.08	2.82	1.08	2.79	1.09	2.74	1.10	2.69	1.11
							-5	3.52	1.10	3.43	1.11	3.35	1.13	3.31	1.14	3.28	1.14	3.22	1.15	3.16	1.16
							0	4.02	1.15	3.92	1.17	3.84	1.18	3.80	1.19	3.76	1.20	3.70	1.21	3.64	1.22
							2	4.22	1.17	4.12	1.19	4.04	1.20	4.00	1.21	3.96	1.22	3.89	1.23	3.83	1.24
							7	4.62	1.21	4.52	1.23	4.43	1.24	4.40	1.25	4.35	1.26	4.28	1.27	4.21	1.28
							10	5.02	1.25	4.92	1.27	4.82	1.29	4.78	1.29	4.74	1.30	4.66	1.32	4.60	1.33
							15	5.52	1.30	5.41	1.32	5.32	1.34	5.27	1.35	5.23	1.35	5.15	1.37	5.08	1.38
2000	2500				4500	45%	-15	3.15	1.21	3.05	1.23	2.96	1.24	2.92	1.25	2.89	1.26	2.82	1.27	2.77	1.28
							-10	3.77	1.27	3.67	1.29	3.57	1.31	3.53	1.32	3.49	1.32	3.42	1.34	3.36	1.35
							-5	4.40	1.33	4.29	1.35	4.19	1.37	4.14	1.38	4.10	1.39	4.02	1.40	3.96	1.41
							0	5.02	1.40	4.90	1.42	4.80	1.44	4.75	1.45	4.71	1.45	4.62	1.47	4.55	1.48
							2	5.27	1.42	5.15	1.44	5.05	1.46	5.00	1.47	4.95	1.48	4.86	1.49	4.79	1.51
							7	5.77	1.47	5.65	1.49	5.54	1.51	5.50	1.52	5.44	1.53	5.35	1.55	5.27	1.56
							10	6.27	1.52	6.15	1.54	6.03	1.56	5.98	1.57	5.92	1.58	5.83	1.60	5.75	1.61
							15	6.90	1.58	6.77	1.60	6.65	1.63	6.59	1.64	6.53	1.65	6.44	1.66	6.35	1.68
2000	3500				5500	55%	-15	3.55	1.35	3.44	1.37	3.34	1.39	3.29	1.40	3.25	1.41	3.18	1.42	3.12	1.43
							-10	4.25	1.42	4.13	1.44	4.03	1.46	3.98	1.47	3.94	1.48	3.86	1.49	3.79	1.51
							-5	4.95	1.49	4.83	1.51	4.72	1.53	4.67	1.54	4.62	1.55	4.53	1.57	4.46	1.58
							0	5.66	1.56	5.53	1.59	5.41	1.61	5.36	1.62	5.30	1.63	5.21	1.64	5.13	1.66
							2	5.94	1.59	5.81	1.61	5.69	1.64	5.63	1.65	5.58	1.65	5.48	1.67	5.40	1.69
							7	6.51	1.65	6.37	1.67	6.24	1.69	6.20	1.70	6.13	1.71	6.03	1.73	5.94	1.75
							10	7.07	1.70	6.93	1.73	6.80	1.75	6.74	1.76	6.68	1.77	6.57	1.79	6.48	1.81
							15	7.78	1.77	7.63	1.79	7.49	1.82	7.43	1.83	7.37	1.84	7.25	1.86	7.15	1.88
2000	5000				7000	70%	-15	4.69	1.78	4.55	1.81	4.42	1.83	4.36	1.84	4.30	1.85	4.20	1.87	4.12	1.88
							-10	5.62	1.87	5.47	1.90	5.33	1.93	5.26	1.94	5.21	1.95	5.10	1.97	5.01	1.98
							-5	6.55	1.97	6.39	2.00	6.24	2.02	6.17	2.03	6.11	2.05	5.99	2.07	5.90	2.08
							0	7.48	2.06	7.31	2.09	7.16	2.12	7.08	2.13	7.02	2.14	6.89	2.16	6.79	2.18
							2	7.86	2.09	7.68	2.13	7.52	2.15	7.45	2.17	7.38	2.18	7.25	2.20	7.14	2.22
							7	8.61	2.17	8.42	2.20	8.25	2.23	8.20	2.24	8.10	2.26	7.97	2.28	7.85	2.30
							10	9.35	2.24	9.16	2.27	8.99	2.30	8.91	2.32	8.83	2.33	8.69	2.36	8.57	2.38
							15	10.29	2.33	10.09	2.36	9.91	2.40	9.82	2.41	9.74	2.43	9.59	2.45	9.46	2.48
2000	6800				8800	88%	-15	5.72	2.22	5.55	2.25	5.39	2.28	5.31	2.29	5.25	2.31	5.13	2.33	5.03	2.35
							-10	6.86	2.33	6.67	2.37	6.50	2.40	6.42	2.41	6.35	2.43	6.22	2.45	6.11	2.47
							-5	7.99	2.45	7.79	2.49	7.61	2.52	7.53	2.53	7.45	2.55	7.31	2.57	7.19	2.60
							0	9.13	2.56	8.92	2.60	8.73	2.64	8.64	2.65	8.56	2.67	8.41	2.70	8.28	2.72
							2	9.58	2.61	9.37	2.65	9.17	2.68	9.08	2.70	9.00	2.72	8.84	2.74	8.71	2.77
							7	10.49	2.70	10.27	2.74	10.07	2.78	10.00	2.79	9.88	2.81	9.72	2.84	9.58	2.87
							10	11.41	2.79	11.17	2.83	10.96	2.87	10.86	2.89	10.77	2.90	10.60	2.94	10.45	2.96
							15	12.55	2.90	12.31	2.95	12.08	2.99	11.98	3.00	11.88	3.02	11.70	3.05	11.54	3.08
2500	2500				5000	50%	-15	3.78	1.45	3.66	1.47	3.55	1.49	3.51	1.50	3.46	1.50	3.38	1.52	3.32	1.53
							-10	4.53	1.52	4.40	1.55	4.29	1.57	4.24	1.57	4.19	1.58	4.10	1.60	4.03	1.61
							-5	5.27	1.60	5.14	1.62	5.02	1.64	4.97	1.65	4.92	1.66	4.83	1.68	4.75	1.69
							0	6.02	1.67	5.89	1.70	5.76	1.72	5.70	1.73	5.65	1.74	5.55	1.76	5.46	1.77
							2	6.32	1.70	6.18	1.73	6.05	1.75	5.99	1.76	5.94	1.77	5.84	1.79	5.75	1.81
							7	6.93	1.76	6.78	1.79	6.64	1.81	6.60	1.82	6.52	1.83	6.42	1.85	6.32	1.87
							10	7.53	1.82	7.37	1.85	7.24	1.87	7.17	1.88	7.11	1.89	7.00	1.92	6.90	1.93
							15	8.28	1.89	8.12	1.92	7.98	1.95	7.91	1.96	7.84	1.97	7.72	1.99	7.62	2.01

12. Capacity Table

12-5. AJ100TXJ5KH/EA

HEATING

Combination (Capacity Index)					Combination (Total)	Combination (%)	Outdoor Temperature (°C,DB)	Indoor Temperature (°C, DB)													
								14		16		18		20		21		22		24	
								TC(kW)	PI(kW)	TC(kW)	PI(kW)	TC(kW)	PI(kW)	TC(kW)	PI(kW)	TC(kW)	PI(kW)	TC(kW)	PI(kW)	TC(kW)	PI(kW)
2500	3500				6000	60%	-15	4.18	1.60	4.05	1.62	3.93	1.64	3.88	1.65	3.83	1.66	3.74	1.68	3.67	1.69
							-10	5.01	1.68	4.87	1.71	4.74	1.73	4.69	1.74	4.63	1.75	4.54	1.77	4.46	1.78
							-5	5.83	1.76	5.69	1.79	5.56	1.81	5.50	1.83	5.44	1.84	5.34	1.85	5.25	1.87
							0	6.66	1.85	6.51	1.87	6.37	1.90	6.31	1.91	6.25	1.92	6.14	1.94	6.04	1.96
							2	7.00	1.88	6.84	1.91	6.70	1.93	6.63	1.95	6.57	1.96	6.46	1.98	6.36	1.99
							7	7.66	1.94	7.50	1.97	7.35	2.00	7.30	2.01	7.22	2.02	7.10	2.05	6.99	2.07
							10	8.33	2.01	8.16	2.04	8.00	2.07	7.93	2.08	7.86	2.09	7.74	2.12	7.63	2.14
							15	9.16	2.09	8.98	2.12	8.82	2.15	8.75	2.16	8.67	2.18	8.54	2.20	8.42	2.22
2500	5000				7500	75%	-15	5.32	2.06	5.16	2.09	5.01	2.12	4.94	2.13	4.88	2.14	4.77	2.16	4.68	2.18
							-10	6.38	2.17	6.20	2.20	6.04	2.23	5.97	2.24	5.90	2.25	5.78	2.28	5.68	2.29
							-5	7.43	2.27	7.25	2.31	7.08	2.34	7.00	2.35	6.93	2.37	6.80	2.39	6.69	2.41
							0	8.49	2.38	8.29	2.42	8.12	2.45	8.03	2.46	7.96	2.48	7.82	2.50	7.70	2.52
							2	8.91	2.42	8.71	2.46	8.53	2.49	8.45	2.51	8.37	2.52	8.22	2.55	8.10	2.57
							7	9.76	2.51	9.55	2.54	9.36	2.58	9.30	2.59	9.19	2.61	9.04	2.64	8.91	2.66
							10	10.61	2.59	10.39	2.63	10.20	2.66	10.10	2.68	10.02	2.70	9.86	2.73	9.72	2.75
							15	11.67	2.69	11.44	2.73	11.24	2.77	11.14	2.79	11.05	2.81	10.88	2.84	10.73	2.86
2500	6800				9300	93%	-15	6.07	2.32	5.88	2.36	5.71	2.39	5.63	2.40	5.56	2.41	5.44	2.44	5.33	2.46
							-10	7.27	2.44	7.07	2.48	6.89	2.51	6.81	2.53	6.73	2.54	6.59	2.57	6.48	2.59
							-5	8.47	2.56	8.26	2.60	8.07	2.64	7.98	2.65	7.90	2.67	7.75	2.69	7.62	2.72
							0	9.68	2.68	9.45	2.72	9.25	2.76	9.16	2.78	9.07	2.79	8.91	2.82	8.77	2.85
							2	10.16	2.73	9.93	2.77	9.72	2.81	9.63	2.83	9.54	2.84	9.37	2.87	9.23	2.90
							7	11.12	2.83	10.89	2.87	10.67	2.91	10.60	2.92	10.48	2.94	10.30	2.97	10.15	3.00
							10	12.09	2.92	11.84	2.96	11.62	3.00	11.52	3.02	11.42	3.04	11.24	3.07	11.08	3.10
							15	13.30	3.04	13.04	3.08	12.81	3.12	12.70	3.14	12.59	3.16	12.40	3.20	12.23	3.23
3500	3500				7000	70%	-15	4.58	1.74	4.44	1.77	4.31	1.79	4.25	1.80	4.20	1.81	4.10	1.83	4.02	1.84
							-10	5.49	1.83	5.33	1.86	5.20	1.88	5.14	1.89	5.08	1.91	4.97	1.92	4.89	1.94
							-5	6.39	1.92	6.23	1.95	6.09	1.98	6.02	1.99	5.96	2.00	5.85	2.02	5.75	2.04
							0	7.30	2.01	7.13	2.04	6.98	2.07	6.91	2.08	6.84	2.09	6.72	2.12	6.62	2.13
							2	7.67	2.05	7.49	2.08	7.34	2.11	7.27	2.12	7.20	2.13	7.07	2.15	6.97	2.17
							7	8.40	2.12	8.22	2.15	8.05	2.18	8.00	2.19	7.91	2.21	7.78	2.23	7.66	2.25
							10	9.12	2.19	8.94	2.22	8.77	2.25	8.69	2.27	8.62	2.28	8.48	2.30	8.36	2.33
							15	10.04	2.28	9.84	2.31	9.67	2.34	9.58	2.36	9.51	2.37	9.36	2.40	9.23	2.42
3500	5000				8500	85%	-15	5.72	2.17	5.55	2.20	5.39	2.23	5.31	2.24	5.25	2.26	5.13	2.28	5.03	2.30
							-10	6.86	2.28	6.67	2.32	6.50	2.35	6.42	2.36	6.35	2.38	6.22	2.40	6.11	2.42
							-5	7.99	2.40	7.79	2.43	7.61	2.46	7.53	2.48	7.45	2.49	7.31	2.52	7.19	2.54
							0	9.13	2.51	8.92	2.55	8.73	2.58	8.64	2.60	8.56	2.61	8.41	2.64	8.28	2.66
							2	9.58	2.55	9.37	2.59	9.17	2.63	9.08	2.64	9.00	2.66	8.84	2.68	8.71	2.71
							7	10.49	2.64	10.27	2.68	10.07	2.72	10.00	2.73	9.88	2.75	9.72	2.78	9.58	2.80
							10	11.41	2.73	11.17	2.77	10.96	2.81	10.86	2.83	10.77	2.84	10.60	2.87	10.45	2.90
							15	12.55	2.84	12.31	2.88	12.08	2.92	11.98	2.94	11.88	2.96	11.70	2.99	11.54	3.02
3500	6800				10300	103%	-15	6.07	2.33	5.88	2.36	5.71	2.39	5.63	2.41	5.56	2.42	5.44	2.45	5.33	2.46
							-10	7.27	2.45	7.07	2.49	6.89	2.52	6.81	2.54	6.73	2.55	6.59	2.57	6.48	2.60
							-5	8.47	2.57	8.26	2.61	8.07	2.65	7.98	2.66	7.90	2.68	7.75	2.70	7.62	2.73
							0	9.68	2.69	9.45	2.73	9.25	2.77	9.16	2.79	9.07	2.80	8.91	2.83	8.77	2.86
							2	10.16	2.74	9.93	2.78	9.72	2.82	9.63	2.84	9.54	2.85	9.37	2.88	9.23	2.91
							7	11.12	2.84	10.89	2.88	10.67	2.92	10.60	2.93	10.48	2.95	10.30	2.98	10.15	3.01
							10	12.09	2.93	11.84	2.97	11.62	3.01	11.52	3.03	11.42	3.05	11.24	3.08	11.08	3.11
							15	13.30	3.05	13.04	3.09	12.81	3.13	12.70	3.15	12.59	3.17	12.40	3.21	12.23	3.24

12. Capacity Table

12-5. AJ100TXJ5KH/EA

HEATING

Combination (Capacity Index)					Combination (Total)	Combination (%)	Outdoor Temperature (°C,DB)	Indoor Temperature (°C, DB)													
								14		16		18		20		21		22		24	
								TC(kW)	PI(kW)	TC(kW)	PI(kW)	TC(kW)	PI(kW)	TC(kW)	PI(kW)	TC(kW)	PI(kW)	TC(kW)	PI(kW)	TC(kW)	PI(kW)
5000	5000				10000	100%	-15	6.07	2.32	5.88	2.36	5.71	2.39	5.63	2.40	5.56	2.41	5.44	2.44	5.33	2.46
							-10	7.27	2.44	7.07	2.48	6.89	2.51	6.81	2.53	6.73	2.54	6.59	2.57	6.48	2.59
							-5	8.47	2.56	8.26	2.60	8.07	2.64	7.98	2.65	7.90	2.67	7.75	2.69	7.62	2.72
							0	9.68	2.68	9.45	2.72	9.25	2.76	9.16	2.78	9.07	2.79	8.91	2.82	8.77	2.85
							2	10.16	2.73	9.93	2.77	9.72	2.81	9.63	2.83	9.54	2.84	9.37	2.87	9.23	2.90
							7	11.12	2.83	10.89	2.87	10.67	2.91	10.60	2.92	10.48	2.94	10.30	2.97	10.15	3.00
							10	12.09	2.92	11.84	2.96	11.62	3.00	11.52	3.02	11.42	3.04	11.24	3.07	11.08	3.10
							15	13.30	3.04	13.04	3.08	12.81	3.12	12.70	3.14	12.59	3.16	12.40	3.20	12.23	3.23
5000	6800				11800	118%	-15	6.07	2.34	5.88	2.37	5.71	2.40	5.63	2.42	5.56	2.43	5.44	2.45	5.33	2.47
							-10	7.27	2.46	7.07	2.50	6.89	2.53	6.81	2.54	6.73	2.56	6.59	2.58	6.48	2.61
							-5	8.47	2.58	8.26	2.62	8.07	2.65	7.98	2.67	7.90	2.69	7.75	2.71	7.62	2.74
							0	9.68	2.70	9.45	2.74	9.25	2.78	9.16	2.80	9.07	2.81	8.91	2.84	8.77	2.87
							2	10.16	2.75	9.93	2.79	9.72	2.83	9.63	2.85	9.54	2.86	9.37	2.89	9.23	2.92
							7	11.12	2.84	10.89	2.89	10.67	2.93	10.60	2.94	10.48	2.96	10.30	2.99	10.15	3.02
							10	12.09	2.94	11.84	2.98	11.62	3.02	11.52	3.04	11.42	3.06	11.24	3.09	11.08	3.12
							15	13.30	3.06	13.04	3.10	12.81	3.15	12.70	3.17	12.59	3.18	12.40	3.22	12.23	3.25
6800	6800				13600	136%	-15	6.07	2.32	5.88	2.36	5.71	2.39	5.63	2.40	5.56	2.41	5.44	2.44	5.33	2.46
							-10	7.27	2.44	7.07	2.48	6.89	2.51	6.81	2.53	6.73	2.54	6.59	2.57	6.48	2.59
							-5	8.47	2.56	8.26	2.60	8.07	2.64	7.98	2.65	7.90	2.67	7.75	2.69	7.62	2.72
							0	9.68	2.68	9.45	2.72	9.25	2.76	9.16	2.78	9.07	2.79	8.91	2.82	8.77	2.85
							2	10.16	2.73	9.93	2.77	9.72	2.81	9.63	2.83	9.54	2.84	9.37	2.87	9.23	2.90
							7	11.12	2.83	10.89	2.87	10.67	2.91	10.60	2.92	10.48	2.94	10.30	2.97	10.15	3.00
							10	12.09	2.92	11.84	2.96	11.62	3.00	11.52	3.02	11.42	3.04	11.24	3.07	11.08	3.10
							15	13.30	3.04	13.04	3.08	12.81	3.12	12.70	3.14	12.59	3.16	12.40	3.20	12.23	3.23
2000	2000	2000			6000	60%	-15	3.78	1.37	3.66	1.39	3.55	1.41	3.51	1.41	3.46	1.42	3.38	1.44	3.32	1.45
							-10	4.53	1.44	4.40	1.46	4.29	1.48	4.24	1.49	4.19	1.50	4.10	1.51	4.03	1.52
							-5	5.27	1.51	5.14	1.53	5.02	1.55	4.97	1.56	4.92	1.57	4.83	1.59	4.75	1.60
							0	6.02	1.58	5.89	1.60	5.76	1.63	5.70	1.64	5.65	1.64	5.55	1.66	5.46	1.68
							2	6.32	1.61	6.18	1.63	6.05	1.65	5.99	1.66	5.94	1.67	5.84	1.69	5.75	1.71
							7	6.93	1.66	6.78	1.69	6.64	1.71	6.60	1.72	6.52	1.73	6.42	1.75	6.32	1.77
							10	7.53	1.72	7.37	1.75	7.24	1.77	7.17	1.78	7.11	1.79	7.00	1.81	6.90	1.83
							15	8.28	1.79	8.12	1.82	7.98	1.84	7.91	1.85	7.84	1.86	7.72	1.88	7.62	1.90
2000	2000	2500			6500	65%	-15	4.41	1.61	4.27	1.64	4.15	1.66	4.09	1.67	4.04	1.68	3.95	1.69	3.87	1.71
							-10	5.28	1.70	5.13	1.72	5.00	1.75	4.94	1.76	4.89	1.77	4.79	1.78	4.70	1.80
							-5	6.15	1.78	6.00	1.81	5.86	1.83	5.80	1.84	5.74	1.85	5.63	1.87	5.54	1.89
							0	7.03	1.87	6.87	1.89	6.72	1.92	6.65	1.93	6.59	1.94	6.47	1.96	6.37	1.98
							2	7.38	1.90	7.21	1.93	7.06	1.95	6.99	1.96	6.93	1.98	6.81	2.00	6.71	2.01
							7	8.08	1.96	7.91	1.99	7.75	2.02	7.70	2.03	7.61	2.04	7.49	2.07	7.38	2.09
							10	8.78	2.03	8.60	2.06	8.44	2.09	8.37	2.10	8.29	2.11	8.16	2.14	8.05	2.16
							15	9.66	2.11	9.48	2.14	9.30	2.17	9.22	2.19	9.15	2.20	9.01	2.22	8.88	2.24
2000	2000	3500			7500	75%	-15	4.81	1.76	4.66	1.78	4.52	1.81	4.46	1.82	4.41	1.83	4.31	1.84	4.22	1.86
							-10	5.76	1.85	5.60	1.88	5.46	1.90	5.39	1.91	5.33	1.92	5.22	1.94	5.13	1.96
							-5	6.71	1.94	6.54	1.97	6.39	2.00	6.32	2.01	6.26	2.02	6.14	2.04	6.04	2.06
							0	7.67	2.03	7.49	2.06	7.33	2.09	7.26	2.10	7.19	2.11	7.06	2.14	6.95	2.15
							2	8.05	2.07	7.87	2.10	7.71	2.13	7.63	2.14	7.56	2.15	7.43	2.17	7.32	2.19
							7	8.81	2.14	8.63	2.17	8.46	2.20	8.40	2.21	8.30	2.23	8.17	2.25	8.05	2.27
							10	9.58	2.21	9.39	2.24	9.21	2.27	9.13	2.29	9.05	2.30	8.90	2.33	8.78	2.35
							15	10.54	2.30	10.34	2.33	10.15	2.36	10.06	2.38	9.98	2.39	9.83	2.42	9.69	2.44

12. Capacity Table

12-5. AJ100TXJ5KH/EA

HEATING

Combination (Capacity Index)					Combination (Total)	Combination (%)	Outdoor Temperature (°C,DB)	Indoor Temperature (°C, DB)													
								14		16		18		20		21		22		24	
								TC(kW)	PI(kW)	TC(kW)	PI(kW)	TC(kW)	PI(kW)	TC(kW)	PI(kW)	TC(kW)	PI(kW)	TC(kW)	PI(kW)	TC(kW)	PI(kW)
2000	2000	5000			9000	90%	-15	5.55	2.15	5.37	2.19	5.22	2.21	5.15	2.23	5.08	2.24	4.97	2.26	4.87	2.28
							-10	6.64	2.27	6.46	2.30	6.30	2.33	6.22	2.34	6.15	2.36	6.03	2.38	5.92	2.40
							-5	7.74	2.38	7.55	2.41	7.37	2.45	7.29	2.46	7.22	2.48	7.08	2.50	6.97	2.52
							0	8.85	2.49	8.64	2.53	8.46	2.56	8.37	2.58	8.29	2.59	8.14	2.62	8.02	2.64
							2	9.29	2.53	9.08	2.57	8.89	2.61	8.80	2.62	8.72	2.64	8.57	2.67	8.44	2.69
							7	10.17	2.62	9.95	2.66	9.75	2.70	9.69	2.71	9.58	2.73	9.42	2.76	9.28	2.78
							10	11.05	2.71	10.83	2.75	10.62	2.79	10.53	2.80	10.44	2.82	10.27	2.85	10.13	2.88
							15	12.16	2.82	11.92	2.86	11.71	2.90	11.61	2.92	11.51	2.94	11.34	2.97	11.18	3.00
2000	2000	6800			10800	108%	-15	5.64	2.17	5.47	2.20	5.31	2.23	5.24	2.24	5.17	2.26	5.06	2.28	4.96	2.30
							-10	6.76	2.28	6.57	2.32	6.41	2.35	6.33	2.36	6.26	2.38	6.13	2.40	6.02	2.42
							-5	7.88	2.40	7.68	2.43	7.50	2.46	7.42	2.48	7.35	2.49	7.21	2.52	7.09	2.54
							0	9.00	2.51	8.79	2.55	8.60	2.58	8.52	2.60	8.44	2.61	8.29	2.64	8.16	2.66
							2	9.45	2.55	9.24	2.59	9.04	2.63	8.96	2.64	8.87	2.66	8.72	2.68	8.59	2.71
							7	10.35	2.64	10.13	2.68	9.93	2.72	9.86	2.73	9.75	2.75	9.59	2.78	9.44	2.80
							10	11.25	2.73	11.02	2.77	10.81	2.81	10.71	2.83	10.62	2.84	10.45	2.87	10.30	2.90
							15	12.37	2.84	12.13	2.88	11.91	2.92	11.81	2.94	11.72	2.96	11.54	2.99	11.38	3.02
2000	2500	2500			7000	70%	-15	5.04	1.89	4.88	1.92	4.74	1.95	4.68	1.96	4.62	1.97	4.51	1.99	4.43	2.00
							-10	6.03	1.99	5.87	2.02	5.72	2.05	5.65	2.06	5.59	2.07	5.47	2.09	5.38	2.11
							-5	7.03	2.09	6.86	2.12	6.70	2.15	6.62	2.16	6.56	2.17	6.43	2.20	6.33	2.21
							0	8.03	2.19	7.85	2.22	7.68	2.25	7.60	2.26	7.53	2.28	7.40	2.30	7.28	2.32
							2	8.43	2.23	8.24	2.26	8.07	2.29	7.99	2.30	7.92	2.32	7.78	2.34	7.66	2.36
							7	9.23	2.30	9.04	2.34	8.86	2.37	8.80	2.38	8.70	2.40	8.55	2.42	8.43	2.45
							10	10.04	2.38	9.83	2.42	9.65	2.45	9.56	2.46	9.48	2.48	9.33	2.50	9.20	2.53
							15	11.04	2.48	10.83	2.51	10.63	2.55	10.54	2.56	10.46	2.58	10.30	2.61	10.15	2.63
2000	2500	3500			8000	80%	-15	5.44	2.00	5.27	2.03	5.12	2.06	5.05	2.07	4.98	2.08	4.87	2.10	4.78	2.12
							-10	6.51	2.11	6.33	2.14	6.17	2.17	6.10	2.18	6.03	2.19	5.91	2.21	5.80	2.23
							-5	7.59	2.21	7.40	2.25	7.23	2.27	7.15	2.29	7.08	2.30	6.95	2.32	6.83	2.35
							0	8.67	2.32	8.47	2.35	8.29	2.38	8.21	2.40	8.13	2.41	7.99	2.43	7.86	2.46
							2	9.10	2.36	8.90	2.39	8.71	2.42	8.63	2.44	8.55	2.45	8.40	2.48	8.27	2.50
							7	9.97	2.44	9.76	2.47	9.56	2.51	9.50	2.52	9.39	2.54	9.24	2.57	9.10	2.59
							10	10.84	2.52	10.62	2.56	10.41	2.59	10.32	2.61	10.23	2.62	10.07	2.65	9.93	2.68
							15	11.92	2.62	11.69	2.66	11.48	2.70	11.38	2.71	11.29	2.73	11.12	2.76	10.96	2.79
2000	2500	5000			9500	95%	-15	5.60	2.12	5.43	2.15	5.27	2.18	5.20	2.19	5.14	2.21	5.02	2.23	4.92	2.25
							-10	6.71	2.23	6.53	2.27	6.36	2.30	6.29	2.31	6.21	2.32	6.09	2.35	5.98	2.37
							-5	7.82	2.34	7.63	2.38	7.45	2.41	7.37	2.42	7.29	2.44	7.16	2.46	7.04	2.48
							0	8.94	2.45	8.73	2.49	8.54	2.52	8.46	2.54	8.38	2.55	8.23	2.58	8.10	2.60
							2	9.38	2.50	9.17	2.53	8.98	2.57	8.89	2.58	8.81	2.60	8.66	2.63	8.53	2.65
							7	10.27	2.58	10.05	2.62	9.86	2.66	9.79	2.67	9.68	2.69	9.52	2.72	9.38	2.74
							10	11.17	2.67	10.94	2.71	10.73	2.75	10.64	2.76	10.54	2.78	10.38	2.81	10.23	2.84
							15	12.28	2.78	12.05	2.82	11.83	2.86	11.73	2.87	11.63	2.89	11.45	2.92	11.30	2.95
2000	2500	6800			11300	113%	-15	5.71	2.17	5.53	2.20	5.37	2.23	5.30	2.24	5.23	2.26	5.11	2.28	5.01	2.30
							-10	6.84	2.28	6.65	2.32	6.48	2.35	6.40	2.36	6.33	2.38	6.20	2.40	6.09	2.42
							-5	7.97	2.40	7.77	2.43	7.59	2.46	7.51	2.48	7.43	2.49	7.29	2.52	7.17	2.54
							0	9.10	2.51	8.89	2.55	8.70	2.58	8.61	2.60	8.53	2.61	8.38	2.64	8.25	2.66
							2	9.55	2.55	9.34	2.59	9.15	2.63	9.06	2.64	8.97	2.66	8.82	2.68	8.68	2.71
							7	10.46	2.64	10.24	2.68	10.04	2.72	9.97	2.73	9.85	2.75	9.69	2.78	9.55	2.80
							10	11.37	2.73	11.14	2.77	10.93	2.81	10.83	2.83	10.74	2.84	10.57	2.87	10.42	2.90
							15	12.51	2.84	12.27	2.88	12.05	2.92	11.94	2.94	11.85	2.96	11.66	2.99	11.50	3.02

12. Capacity Table

12-5. AJ100TXJ5KH/EA

HEATING

Combination (Capacity Index)					Combination (Total)	Combination (%)	Outdoor Temperature (°C,DB)	Indoor Temperature (°C, DB)													
								14		16		18		20		21		22		24	
								TC(kW)	PI(kW)	TC(kW)	PI(kW)	TC(kW)	PI(kW)	TC(kW)	PI(kW)	TC(kW)	PI(kW)	TC(kW)	PI(kW)	TC(kW)	PI(kW)
2000	3500	3500			9000	90%	-15	5.54	2.15	5.36	2.18	5.21	2.21	5.14	2.22	5.07	2.23	4.96	2.25	4.86	2.27
							-10	6.63	2.26	6.45	2.29	6.28	2.32	6.21	2.34	6.14	2.35	6.01	2.37	5.91	2.39
							-5	7.73	2.37	7.53	2.41	7.36	2.44	7.28	2.45	7.20	2.47	7.07	2.49	6.95	2.51
							0	8.83	2.48	8.62	2.52	8.44	2.55	8.35	2.57	8.27	2.58	8.13	2.61	8.00	2.63
							2	9.27	2.53	9.06	2.56	8.87	2.60	8.78	2.61	8.70	2.63	8.55	2.66	8.42	2.68
							7	10.15	2.61	9.93	2.65	9.73	2.69	9.67	2.70	9.56	2.72	9.40	2.75	9.26	2.77
							10	11.03	2.70	10.81	2.74	10.60	2.78	10.51	2.79	10.42	2.81	10.25	2.84	10.10	2.87
							15	12.13	2.81	11.90	2.85	11.68	2.89	11.58	2.91	11.49	2.92	11.31	2.96	11.16	2.98
2000	3500	5000			10500	105%	-15	5.64	2.16	5.47	2.19	5.31	2.22	5.24	2.24	5.17	2.25	5.06	2.27	4.96	2.29
							-10	6.76	2.28	6.57	2.31	6.41	2.34	6.33	2.35	6.26	2.37	6.13	2.39	6.02	2.41
							-5	7.88	2.39	7.68	2.42	7.50	2.46	7.42	2.47	7.35	2.48	7.21	2.51	7.09	2.53
							0	9.00	2.50	8.79	2.54	8.60	2.57	8.52	2.59	8.44	2.60	8.29	2.63	8.16	2.65
							2	9.45	2.54	9.24	2.58	9.04	2.62	8.96	2.63	8.87	2.65	8.72	2.67	8.59	2.70
							7	10.35	2.63	10.13	2.67	9.93	2.71	9.86	2.72	9.75	2.74	9.59	2.77	9.44	2.79
							10	11.25	2.72	11.02	2.76	10.81	2.80	10.71	2.82	10.62	2.83	10.45	2.86	10.30	2.89
							15	12.37	2.83	12.13	2.87	11.91	2.91	11.81	2.93	11.72	2.95	11.54	2.98	11.38	3.01
2000	3500	6800			12300	123%	-15	5.75	2.21	5.57	2.24	5.41	2.27	5.33	2.29	5.27	2.30	5.15	2.32	5.05	2.34
							-10	6.88	2.33	6.69	2.36	6.52	2.39	6.45	2.41	6.37	2.42	6.24	2.44	6.13	2.46
							-5	8.02	2.44	7.82	2.48	7.64	2.51	7.56	2.52	7.48	2.54	7.34	2.56	7.22	2.59
							0	9.16	2.55	8.95	2.59	8.76	2.63	8.67	2.64	8.59	2.66	8.44	2.69	8.31	2.71
							2	9.62	2.60	9.41	2.64	9.21	2.67	9.12	2.69	9.03	2.71	8.88	2.73	8.74	2.76
							7	10.54	2.69	10.31	2.73	10.11	2.77	10.04	2.78	9.92	2.80	9.76	2.83	9.62	2.86
							10	11.45	2.78	11.22	2.82	11.01	2.86	10.91	2.88	10.81	2.89	10.64	2.93	10.49	2.95
							15	12.60	2.89	12.35	2.93	12.13	2.97	12.03	2.99	11.93	3.01	11.75	3.04	11.58	3.07
2000	5000	5000			12000	120%	-15	5.76	2.21	5.58	2.24	5.42	2.27	5.35	2.29	5.28	2.30	5.16	2.32	5.06	2.34
							-10	6.90	2.33	6.71	2.36	6.54	2.39	6.46	2.41	6.39	2.42	6.26	2.44	6.15	2.46
							-5	8.04	2.44	7.84	2.48	7.66	2.51	7.57	2.52	7.50	2.54	7.35	2.56	7.23	2.59
							0	9.18	2.55	8.97	2.59	8.78	2.63	8.69	2.64	8.61	2.66	8.46	2.69	8.33	2.71
							2	9.64	2.60	9.42	2.64	9.23	2.67	9.14	2.69	9.05	2.71	8.90	2.73	8.76	2.76
							7	10.56	2.69	10.33	2.73	10.13	2.77	10.06	2.78	9.94	2.80	9.78	2.83	9.64	2.86
							10	11.47	2.78	11.24	2.82	11.03	2.86	10.93	2.88	10.84	2.89	10.66	2.93	10.51	2.95
							15	12.62	2.89	12.38	2.93	12.16	2.97	12.05	2.99	11.95	3.01	11.77	3.04	11.61	3.07
2000	5000	6800			13800	138%	-15	6.19	2.29	5.99	2.32	5.82	2.35	5.74	2.37	5.67	2.38	5.54	2.40	5.44	2.42
							-10	7.41	2.41	7.21	2.45	7.02	2.48	6.94	2.49	6.86	2.51	6.72	2.53	6.60	2.55
							-5	8.64	2.53	8.42	2.57	8.23	2.60	8.14	2.62	8.05	2.63	7.90	2.66	7.77	2.68
							0	9.87	2.65	9.64	2.69	9.43	2.72	9.34	2.74	9.25	2.75	9.09	2.78	8.95	2.81
							2	10.36	2.69	10.13	2.73	9.92	2.77	9.82	2.79	9.73	2.80	9.56	2.83	9.42	2.86
							7	11.34	2.79	11.10	2.83	10.88	2.87	10.81	2.88	10.68	2.90	10.51	2.93	10.35	2.96
							10	12.33	2.88	12.08	2.92	11.85	2.96	11.74	2.98	11.64	3.00	11.46	3.03	11.30	3.06
							15	13.56	3.00	13.30	3.04	13.06	3.08	12.95	3.10	12.84	3.12	12.65	3.15	12.47	3.18
2000	6800	6800			15600	156%	-15	6.30	2.35	6.10	2.38	5.92	2.41	5.85	2.43	5.77	2.44	5.64	2.46	5.53	2.48
							-10	7.54	2.47	7.33	2.50	7.15	2.54	7.06	2.55	6.98	2.57	6.84	2.59	6.72	2.61
							-5	8.79	2.59	8.57	2.63	8.37	2.66	8.28	2.68	8.20	2.69	8.04	2.72	7.91	2.75
							0	10.04	2.71	9.81	2.75	9.60	2.79	9.50	2.80	9.41	2.82	9.25	2.85	9.10	2.88
							2	10.54	2.76	10.30	2.80	10.09	2.84	9.99	2.85	9.90	2.87	9.73	2.90	9.58	2.93
							7	11.54	2.85	11.30	2.90	11.07	2.94	11.00	2.95	10.87	2.97	10.69	3.00	10.54	3.03
							10	12.55	2.95	12.29	2.99	12.06	3.03	11.95	3.05	11.85	3.07	11.66	3.10	11.49	3.13
							15	13.80	3.07	13.54	3.11	13.29	3.16	13.18	3.18	13.07	3.19	12.87	3.23	12.69	3.26

12. Capacity Table

12-5. AJ100TXJ5KH/EA

HEATING

Combination (Capacity Index)					Combination (Total)	Combination (%)	Outdoor Temperature (°C,DB)	Indoor Temperature (°C, DB)													
								14		16		18		20		21		22		24	
								TC(kW)	PI(kW)	TC(kW)	PI(kW)	TC(kW)	PI(kW)	TC(kW)	PI(kW)	TC(kW)	PI(kW)	TC(kW)	PI(kW)	TC(kW)	PI(kW)
2500	2500	2500			7500	75%	-15	5.51	2.11	5.34	2.14	5.19	2.17	5.12	2.18	5.05	2.19	4.94	2.21	4.84	2.23
							-10	6.60	2.22	6.42	2.25	6.26	2.28	6.18	2.29	6.11	2.31	5.99	2.33	5.88	2.35
							-5	7.70	2.33	7.50	2.36	7.33	2.39	7.25	2.41	7.18	2.42	7.04	2.44	6.93	2.47
							0	8.79	2.44	8.59	2.47	8.40	2.50	8.32	2.52	8.24	2.53	8.09	2.56	7.97	2.58
							2	9.23	2.48	9.02	2.52	8.83	2.55	8.75	2.56	8.67	2.58	8.52	2.61	8.39	2.63
							7	10.11	2.56	9.89	2.60	9.69	2.64	9.63	2.65	9.52	2.67	9.36	2.70	9.22	2.72
							10	10.98	2.65	10.76	2.69	10.56	2.73	10.46	2.74	10.37	2.76	10.21	2.79	10.06	2.81
							15	12.08	2.76	11.85	2.80	11.64	2.84	11.54	2.85	11.44	2.87	11.27	2.90	11.11	2.93
2500	2500	3500			8500	85%	-15	5.55	2.04	5.38	2.07	5.22	2.09	5.15	2.10	5.09	2.12	4.97	2.14	4.88	2.15
							-10	6.65	2.14	6.47	2.17	6.30	2.20	6.23	2.22	6.16	2.23	6.03	2.25	5.93	2.27
							-5	7.75	2.25	7.56	2.28	7.38	2.31	7.30	2.32	7.23	2.34	7.09	2.36	6.98	2.38
							0	8.85	2.35	8.65	2.39	8.46	2.42	8.38	2.43	8.30	2.45	8.15	2.47	8.03	2.50
							2	9.30	2.39	9.09	2.43	8.90	2.46	8.81	2.48	8.73	2.49	8.58	2.52	8.45	2.54
							7	10.18	2.48	9.96	2.51	9.76	2.55	9.70	2.56	9.59	2.58	9.43	2.61	9.29	2.63
							10	11.06	2.56	10.84	2.60	10.63	2.63	10.54	2.65	10.45	2.67	10.28	2.69	10.14	2.72
							15	12.17	2.66	11.94	2.70	11.72	2.74	11.62	2.76	11.53	2.77	11.35	2.80	11.19	2.83
2500	2500	5000			10000	100%	-15	5.66	2.19	5.48	2.23	5.33	2.26	5.26	2.27	5.19	2.28	5.07	2.30	4.97	2.32
							-10	6.78	2.31	6.59	2.34	6.43	2.37	6.35	2.39	6.28	2.40	6.15	2.43	6.04	2.45
							-5	7.90	2.42	7.71	2.46	7.53	2.49	7.45	2.51	7.37	2.52	7.23	2.55	7.11	2.57
							0	9.03	2.54	8.82	2.57	8.63	2.61	8.54	2.62	8.46	2.64	8.31	2.67	8.18	2.69
							2	9.48	2.58	9.26	2.62	9.07	2.65	8.98	2.67	8.90	2.69	8.75	2.71	8.61	2.74
							7	10.38	2.67	10.16	2.71	9.96	2.75	9.89	2.76	9.78	2.78	9.61	2.81	9.47	2.84
							10	11.28	2.76	11.05	2.80	10.84	2.84	10.74	2.86	10.65	2.87	10.48	2.90	10.33	2.93
							15	12.41	2.87	12.17	2.91	11.95	2.95	11.85	2.97	11.75	2.99	11.57	3.02	11.41	3.05
2500	2500	6800			11800	118%	-15	6.10	2.24	5.91	2.28	5.74	2.30	5.66	2.32	5.59	2.33	5.46	2.35	5.36	2.37
							-10	7.30	2.36	7.10	2.39	6.92	2.43	6.84	2.44	6.76	2.45	6.62	2.48	6.51	2.50
							-5	8.51	2.48	8.30	2.51	8.11	2.55	8.02	2.56	7.93	2.58	7.79	2.60	7.66	2.62
							0	9.72	2.59	9.50	2.63	9.29	2.66	9.20	2.68	9.11	2.70	8.95	2.72	8.81	2.75
							2	10.21	2.64	9.98	2.68	9.77	2.71	9.67	2.73	9.58	2.74	9.42	2.77	9.28	2.80
							7	11.18	2.73	10.94	2.77	10.72	2.81	10.65	2.82	10.53	2.84	10.35	2.87	10.20	2.90
							10	12.15	2.82	11.90	2.86	11.68	2.90	11.57	2.92	11.47	2.94	11.29	2.97	11.13	3.00
							15	13.36	2.93	13.11	2.98	12.87	3.02	12.76	3.04	12.65	3.05	12.46	3.09	12.29	3.12
2500	3500	3500			9500	95%	-15	5.59	2.11	5.42	2.15	5.26	2.17	5.19	2.19	5.13	2.20	5.01	2.22	4.91	2.24
							-10	6.70	2.23	6.51	2.26	6.35	2.29	6.27	2.30	6.20	2.31	6.08	2.34	5.97	2.36
							-5	7.81	2.34	7.61	2.37	7.44	2.40	7.36	2.42	7.28	2.43	7.14	2.45	7.03	2.48
							0	8.92	2.44	8.71	2.48	8.53	2.51	8.44	2.53	8.36	2.54	8.21	2.57	8.09	2.59
							2	9.36	2.49	9.15	2.52	8.96	2.56	8.87	2.57	8.79	2.59	8.64	2.62	8.51	2.64
							7	10.25	2.57	10.03	2.61	9.84	2.65	9.77	2.66	9.66	2.68	9.50	2.71	9.36	2.73
							10	11.14	2.66	10.92	2.70	10.71	2.74	10.61	2.75	10.52	2.77	10.36	2.80	10.21	2.83
							15	12.26	2.77	12.02	2.81	11.81	2.85	11.70	2.86	11.61	2.88	11.43	2.91	11.27	2.94
2500	3500	5000			11000	110%	-15	5.71	2.16	5.53	2.19	5.37	2.22	5.30	2.24	5.23	2.25	5.11	2.27	5.01	2.29
							-10	6.84	2.28	6.65	2.31	6.48	2.34	6.40	2.35	6.33	2.37	6.20	2.39	6.09	2.41
							-5	7.97	2.39	7.77	2.42	7.59	2.46	7.51	2.47	7.43	2.48	7.29	2.51	7.17	2.53
							0	9.10	2.50	8.89	2.54	8.70	2.57	8.61	2.59	8.53	2.60	8.38	2.63	8.25	2.65
							2	9.55	2.54	9.34	2.58	9.15	2.62	9.06	2.63	8.97	2.65	8.82	2.67	8.68	2.70
							7	10.46	2.63	10.24	2.67	10.04	2.71	9.97	2.72	9.85	2.74	9.69	2.77	9.55	2.79
							10	11.37	2.72	11.14	2.76	10.93	2.80	10.83	2.82	10.74	2.83	10.57	2.86	10.42	2.89
							15	12.51	2.83	12.27	2.87	12.05	2.91	11.94	2.93	11.85	2.95	11.66	2.98	11.50	3.01

12. Capacity Table

12-5. AJ100TXJ5KH/EA

HEATING

Combination (Capacity Index)					Combination (Total)	Combination (%)	Outdoor Temperature (°C,DB)	Indoor Temperature (°C, DB)													
								14		16		18		20		21		22		24	
								TC(kW)	PI(kW)	TC(kW)	PI(kW)	TC(kW)	PI(kW)	TC(kW)	PI(kW)	TC(kW)	PI(kW)	TC(kW)	PI(kW)	TC(kW)	PI(kW)
2500	3500	6800			12800	128%	-15	6.14	2.25	5.94	2.28	5.77	2.31	5.70	2.33	5.62	2.34	5.50	2.36	5.39	2.38
							-10	7.35	2.37	7.15	2.40	6.97	2.43	6.88	2.45	6.80	2.46	6.67	2.49	6.55	2.51
							-5	8.57	2.48	8.35	2.52	8.16	2.55	8.07	2.57	7.99	2.58	7.84	2.61	7.71	2.63
							0	9.79	2.60	9.56	2.64	9.35	2.67	9.26	2.69	9.17	2.71	9.01	2.73	8.87	2.76
							2	10.27	2.65	10.04	2.69	9.83	2.72	9.74	2.74	9.65	2.75	9.48	2.78	9.34	2.81
							7	11.25	2.74	11.01	2.78	10.79	2.82	10.72	2.83	10.60	2.85	10.42	2.88	10.27	2.91
							10	12.23	2.83	11.98	2.87	11.75	2.91	11.65	2.93	11.55	2.95	11.36	2.98	11.20	3.01
							15	13.45	2.94	13.19	2.99	12.95	3.03	12.84	3.05	12.74	3.07	12.54	3.10	12.37	3.13
2500	5000	5000			12500	125%	-15	6.15	2.24	5.96	2.28	5.78	2.30	5.71	2.32	5.63	2.33	5.51	2.35	5.40	2.37
							-10	7.36	2.36	7.16	2.39	6.98	2.43	6.90	2.44	6.82	2.45	6.68	2.48	6.56	2.50
							-5	8.58	2.48	8.37	2.51	8.17	2.55	8.09	2.56	8.00	2.58	7.85	2.60	7.72	2.62
							0	9.80	2.59	9.58	2.63	9.37	2.66	9.28	2.68	9.19	2.70	9.03	2.72	8.89	2.75
							2	10.29	2.64	10.06	2.68	9.85	2.71	9.76	2.73	9.66	2.74	9.50	2.77	9.35	2.80
							7	11.27	2.73	11.03	2.77	10.81	2.81	10.74	2.82	10.62	2.84	10.44	2.87	10.29	2.90
							10	12.25	2.82	12.00	2.86	11.77	2.90	11.67	2.92	11.57	2.94	11.38	2.97	11.22	3.00
							15	13.48	2.93	13.22	2.98	12.98	3.02	12.87	3.04	12.76	3.05	12.57	3.09	12.39	3.12
2500	5000	6800			14300	143%	-15	6.30	2.33	6.10	2.36	5.92	2.39	5.85	2.41	5.77	2.42	5.64	2.45	5.53	2.46
							-10	7.54	2.45	7.33	2.49	7.15	2.52	7.06	2.54	6.98	2.55	6.84	2.57	6.72	2.60
							-5	8.79	2.57	8.57	2.61	8.37	2.65	8.28	2.66	8.20	2.68	8.04	2.70	7.91	2.73
							0	10.04	2.69	9.81	2.73	9.60	2.77	9.50	2.79	9.41	2.80	9.25	2.83	9.10	2.86
							2	10.54	2.74	10.30	2.78	10.09	2.82	9.99	2.84	9.90	2.85	9.73	2.88	9.58	2.91
							7	11.54	2.84	11.30	2.88	11.07	2.92	11.00	2.93	10.87	2.95	10.69	2.98	10.54	3.01
							10	12.55	2.93	12.29	2.97	12.06	3.01	11.95	3.03	11.85	3.05	11.66	3.08	11.49	3.11
							15	13.80	3.05	13.54	3.09	13.29	3.13	13.18	3.15	13.07	3.17	12.87	3.21	12.69	3.24
2500	6800	6800			16100	161%	-15	6.30	2.38	6.10	2.41	5.92	2.44	5.85	2.46	5.77	2.47	5.64	2.50	5.53	2.52
							-10	7.54	2.50	7.33	2.54	7.15	2.57	7.06	2.59	6.98	2.60	6.84	2.63	6.72	2.65
							-5	8.79	2.62	8.57	2.66	8.37	2.70	8.28	2.72	8.20	2.73	8.04	2.76	7.91	2.78
							0	10.04	2.75	9.81	2.79	9.60	2.83	9.50	2.84	9.41	2.86	9.25	2.89	9.10	2.91
							2	10.54	2.80	10.30	2.84	10.09	2.88	9.99	2.89	9.90	2.91	9.73	2.94	9.58	2.97
							7	11.54	2.89	11.30	2.94	11.07	2.98	11.00	2.99	10.87	3.01	10.69	3.04	10.54	3.07
							10	12.55	2.99	12.29	3.03	12.06	3.08	11.95	3.09	11.85	3.11	11.66	3.15	11.49	3.18
							15	13.80	3.11	13.54	3.16	13.29	3.20	13.18	3.22	13.07	3.24	12.87	3.27	12.69	3.31
3500	3500	3500			10500	105%	-15	5.63	2.15	5.46	2.19	5.30	2.21	5.23	2.23	5.16	2.24	5.05	2.26	4.95	2.28
							-10	6.75	2.27	6.56	2.30	6.39	2.33	6.32	2.34	6.25	2.36	6.12	2.38	6.01	2.40
							-5	7.86	2.38	7.67	2.41	7.49	2.45	7.41	2.46	7.33	2.48	7.19	2.50	7.08	2.52
							0	8.98	2.49	8.77	2.53	8.59	2.56	8.50	2.58	8.42	2.59	8.27	2.62	8.14	2.64
							2	9.43	2.53	9.22	2.57	9.03	2.61	8.94	2.62	8.85	2.64	8.70	2.67	8.57	2.69
							7	10.33	2.62	10.11	2.66	9.91	2.70	9.84	2.71	9.73	2.73	9.57	2.76	9.43	2.78
							10	11.22	2.71	11.00	2.75	10.79	2.79	10.69	2.80	10.60	2.82	10.43	2.85	10.28	2.88
							15	12.35	2.82	12.11	2.86	11.89	2.90	11.79	2.92	11.69	2.94	11.51	2.97	11.35	3.00
3500	3500	5000			12000	120%	-15	5.75	2.20	5.57	2.23	5.41	2.26	5.33	2.28	5.27	2.29	5.15	2.31	5.05	2.33
							-10	6.88	2.32	6.69	2.35	6.52	2.38	6.45	2.40	6.37	2.41	6.24	2.43	6.13	2.45
							-5	8.02	2.43	7.82	2.47	7.64	2.50	7.56	2.52	7.48	2.53	7.34	2.56	7.22	2.58
							0	9.16	2.55	8.95	2.58	8.76	2.62	8.67	2.63	8.59	2.65	8.44	2.68	8.31	2.70
							2	9.62	2.59	9.41	2.63	9.21	2.66	9.12	2.68	9.03	2.70	8.88	2.72	8.74	2.75
							7	10.54	2.68	10.31	2.72	10.11	2.76	10.04	2.77	9.92	2.79	9.76	2.82	9.62	2.85
							10	11.45	2.77	11.22	2.81	11.01	2.85	10.91	2.87	10.81	2.88	10.64	2.91	10.49	2.94
							15	12.60	2.88	12.35	2.92	12.13	2.96	12.03	2.98	11.93	3.00	11.75	3.03	11.58	3.06

12. Capacity Table

12-5. AJ100TXJ5KH/EA

HEATING

Combination (Capacity Index)					Combination (Total)	Combination (%)	Outdoor Temperature (°C,DB)	Indoor Temperature (°C, DB)													
								14		16		18		20		21		22		24	
								TC(kW)	PI(kW)	TC(kW)	PI(kW)	TC(kW)	PI(kW)	TC(kW)	PI(kW)	TC(kW)	PI(kW)	TC(kW)	PI(kW)	TC(kW)	PI(kW)
3500	3500	6800			13800	138%	-15	6.18	2.28	5.98	2.32	5.81	2.35	5.73	2.36	5.66	2.37	5.53	2.40	5.43	2.41
							-10	7.40	2.40	7.19	2.44	7.01	2.47	6.93	2.48	6.85	2.50	6.71	2.52	6.59	2.54
							-5	8.62	2.52	8.41	2.56	8.21	2.59	8.12	2.61	8.04	2.62	7.89	2.65	7.76	2.67
							0	9.85	2.64	9.62	2.68	9.42	2.71	9.32	2.73	9.23	2.74	9.07	2.77	8.93	2.80
							2	10.34	2.68	10.11	2.72	9.90	2.76	9.80	2.78	9.71	2.79	9.54	2.82	9.40	2.85
							7	11.32	2.78	11.08	2.82	10.86	2.86	10.79	2.87	10.66	2.89	10.49	2.92	10.34	2.95
							10	12.31	2.87	12.06	2.91	11.83	2.95	11.72	2.97	11.62	2.99	11.44	3.02	11.27	3.05
							15	13.54	2.98	13.28	3.03	13.04	3.07	12.93	3.09	12.82	3.11	12.62	3.14	12.45	3.17
3500	5000	5000			13500	135%	-15	6.18	2.28	5.99	2.32	5.82	2.35	5.74	2.36	5.67	2.37	5.54	2.40	5.43	2.41
							-10	7.41	2.40	7.20	2.44	7.02	2.47	6.93	2.48	6.86	2.50	6.72	2.52	6.60	2.54
							-5	8.63	2.52	8.41	2.56	8.22	2.59	8.13	2.61	8.05	2.62	7.90	2.65	7.77	2.67
							0	9.86	2.64	9.63	2.68	9.42	2.71	9.33	2.73	9.24	2.74	9.08	2.77	8.94	2.80
							2	10.35	2.68	10.12	2.72	9.91	2.76	9.81	2.78	9.72	2.79	9.55	2.82	9.41	2.85
							7	11.33	2.78	11.09	2.82	10.87	2.86	10.80	2.87	10.67	2.89	10.50	2.92	10.35	2.95
							10	12.32	2.87	12.07	2.91	11.84	2.95	11.73	2.97	11.63	2.99	11.45	3.02	11.29	3.05
							15	13.55	2.98	13.29	3.03	13.05	3.07	12.94	3.09	12.83	3.11	12.64	3.14	12.46	3.17
3500	5000	6800			15300	153%	-15	6.30	2.33	6.10	2.36	5.92	2.39	5.85	2.41	5.77	2.42	5.64	2.45	5.53	2.46
							-10	7.54	2.45	7.33	2.49	7.15	2.52	7.06	2.54	6.98	2.55	6.84	2.57	6.72	2.60
							-5	8.79	2.57	8.57	2.61	8.37	2.65	8.28	2.66	8.20	2.68	8.04	2.70	7.91	2.73
							0	10.04	2.69	9.81	2.73	9.60	2.77	9.50	2.79	9.41	2.80	9.25	2.83	9.10	2.86
							2	10.54	2.74	10.30	2.78	10.09	2.82	9.99	2.84	9.90	2.85	9.73	2.88	9.58	2.91
							7	11.54	2.84	11.30	2.88	11.07	2.92	11.00	2.93	10.87	2.95	10.69	2.98	10.54	3.01
							10	12.55	2.93	12.29	2.97	12.06	3.01	11.95	3.03	11.85	3.05	11.66	3.08	11.49	3.11
							15	13.80	3.05	13.54	3.09	13.29	3.13	13.18	3.15	13.07	3.17	12.87	3.21	12.69	3.24
3500	6800	6800			17100	171%	-15	6.30	2.42	6.10	2.45	5.92	2.48	5.85	2.50	5.77	2.51	5.64	2.54	5.53	2.56
							-10	7.54	2.54	7.33	2.58	7.15	2.61	7.06	2.63	6.98	2.65	6.84	2.67	6.72	2.69
							-5	8.79	2.67	8.57	2.71	8.37	2.74	8.28	2.76	8.20	2.78	8.04	2.80	7.91	2.83
							0	10.04	2.79	9.81	2.84	9.60	2.87	9.50	2.89	9.41	2.91	9.25	2.94	9.10	2.96
							2	10.54	2.84	10.30	2.89	10.09	2.92	9.99	2.94	9.90	2.96	9.73	2.99	9.58	3.02
							7	11.54	2.94	11.30	2.99	11.07	3.03	11.00	3.04	10.87	3.06	10.69	3.09	10.54	3.12
							10	12.55	3.04	12.29	3.09	12.06	3.13	11.95	3.15	11.85	3.16	11.66	3.20	11.49	3.23
							15	13.80	3.16	13.54	3.21	13.29	3.25	13.18	3.27	13.07	3.29	12.87	3.33	12.69	3.36
5000	5000	5000			15000	150%	-15	6.30	2.33	6.10	2.36	5.92	2.39	5.85	2.41	5.77	2.42	5.64	2.45	5.53	2.46
							-10	7.54	2.45	7.33	2.49	7.15	2.52	7.06	2.54	6.98	2.55	6.84	2.57	6.72	2.60
							-5	8.79	2.57	8.57	2.61	8.37	2.65	8.28	2.66	8.20	2.68	8.04	2.70	7.91	2.73
							0	10.04	2.69	9.81	2.73	9.60	2.77	9.50	2.79	9.41	2.80	9.25	2.83	9.10	2.86
							2	10.54	2.74	10.30	2.78	10.09	2.82	9.99	2.84	9.90	2.85	9.73	2.88	9.58	2.91
							7	11.54	2.84	11.30	2.88	11.07	2.92	11.00	2.93	10.87	2.95	10.69	2.98	10.54	3.01
							10	12.55	2.93	12.29	2.97	12.06	3.01	11.95	3.03	11.85	3.05	11.66	3.08	11.49	3.11
							15	13.80	3.05	13.54	3.09	13.29	3.13	13.18	3.15	13.07	3.17	12.87	3.21	12.69	3.24
5000	5000	6800			16800	168%	-15	6.30	2.42	6.10	2.45	5.92	2.48	5.77	2.51	5.70	2.53	5.64	2.54	5.53	2.56
							-10	7.54	2.54	7.33	2.58	7.15	2.61	6.98	2.65	6.91	2.66	6.84	2.67	6.72	2.69
							-5	8.79	2.67	8.57	2.71	8.37	2.74	8.20	2.78	8.12	2.79	8.04	2.80	7.91	2.83
							0	10.04	2.79	9.81	2.84	9.60	2.87	9.41	2.91	9.33	2.92	9.25	2.94	9.10	2.96
							2	10.54	2.84	10.30	2.89	10.09	2.92	9.90	2.96	9.81	2.97	9.73	2.99	9.58	3.02
							7	11.79	2.97	11.55	3.01	11.32	3.05	11.00	3.04	11.02	3.10	10.93	3.12	10.78	3.15
							10	12.55	3.04	12.29	3.09	12.06	3.13	11.85	3.16	11.75	3.18	11.66	3.20	11.49	3.23
							15	13.80	3.16	13.54	3.21	13.29	3.25	13.07	3.29	12.97	3.31	12.87	3.33	12.69	3.36

12. Capacity Table

12-5. AJ100TXJ5KH/EA

HEATING

Combination (Capacity Index)					Combination (Total)	Combination (%)	Outdoor Temperature (°C,DB)	Indoor Temperature (°C, DB)													
								14		16		18		20		21		22		24	
								TC(kW)	PI(kW)	TC(kW)	PI(kW)	TC(kW)	PI(kW)	TC(kW)	PI(kW)	TC(kW)	PI(kW)	TC(kW)	PI(kW)	TC(kW)	PI(kW)
2000	2000	2000	2000		8000	80%	-15	5.04	1.78	4.88	1.81	4.74	1.83	4.68	1.84	4.62	1.85	4.51	1.87	4.43	1.88
							-10	6.03	1.87	5.87	1.90	5.72	1.93	5.65	1.94	5.59	1.95	5.47	1.97	5.38	1.98
							-5	7.03	1.97	6.86	2.00	6.70	2.02	6.62	2.03	6.56	2.05	6.43	2.07	6.33	2.08
							0	8.03	2.06	7.85	2.09	7.68	2.12	7.60	2.13	7.53	2.14	7.40	2.16	7.28	2.18
							2	8.43	2.09	8.24	2.13	8.07	2.15	7.99	2.17	7.92	2.18	7.78	2.20	7.66	2.22
							7	9.23	2.17	9.04	2.20	8.86	2.23	8.80	2.24	8.70	2.26	8.55	2.28	8.43	2.30
							10	10.04	2.24	9.83	2.27	9.65	2.30	9.56	2.32	9.48	2.33	9.33	2.36	9.20	2.38
							15	11.04	2.33	10.83	2.36	10.63	2.40	10.54	2.41	10.46	2.43	10.30	2.45	10.15	2.48
2000	2000	2000	2500		8500	85%	-15	5.51	2.03	5.34	2.06	5.19	2.08	5.12	2.10	5.05	2.11	4.94	2.13	4.84	2.15
							-10	6.60	2.13	6.42	2.17	6.26	2.19	6.18	2.21	6.11	2.22	5.99	2.24	5.88	2.26
							-5	7.70	2.24	7.50	2.27	7.33	2.30	7.25	2.32	7.18	2.33	7.04	2.35	6.93	2.37
							0	8.79	2.34	8.59	2.38	8.40	2.41	8.32	2.42	8.24	2.44	8.09	2.46	7.97	2.49
							2	9.23	2.38	9.02	2.42	8.83	2.45	8.75	2.47	8.67	2.48	8.52	2.51	8.39	2.53
							7	10.11	2.47	9.89	2.50	9.69	2.54	9.63	2.55	9.52	2.57	9.36	2.60	9.22	2.62
							10	10.98	2.55	10.76	2.59	10.56	2.62	10.46	2.64	10.37	2.65	10.21	2.68	10.06	2.71
							15	12.08	2.65	11.85	2.69	11.64	2.73	11.54	2.75	11.44	2.76	11.27	2.79	11.11	2.82
2000	2000	2000	3500		9500	95%	-15	5.55	2.17	5.37	2.20	5.22	2.23	5.15	2.24	5.08	2.26	4.97	2.28	4.87	2.30
							-10	6.64	2.28	6.46	2.32	6.30	2.35	6.22	2.36	6.15	2.38	6.03	2.40	5.92	2.42
							-5	7.74	2.40	7.55	2.43	7.37	2.46	7.29	2.48	7.22	2.49	7.08	2.52	6.97	2.54
							0	8.85	2.51	8.64	2.55	8.46	2.58	8.37	2.60	8.29	2.61	8.14	2.64	8.02	2.66
							2	9.29	2.55	9.08	2.59	8.89	2.63	8.80	2.64	8.72	2.66	8.57	2.68	8.44	2.71
							7	10.17	2.64	9.95	2.68	9.75	2.72	9.69	2.73	9.58	2.75	9.42	2.78	9.28	2.80
							10	11.05	2.73	10.83	2.77	10.62	2.81	10.53	2.83	10.44	2.84	10.27	2.87	10.13	2.90
							15	12.16	2.84	11.92	2.88	11.71	2.92	11.61	2.94	11.51	2.96	11.34	2.99	11.18	3.02
2000	2000	2000	5000		11000	110%	-15	5.67	2.18	5.49	2.21	5.33	2.24	5.26	2.25	5.19	2.26	5.08	2.29	4.98	2.31
							-10	6.79	2.29	6.60	2.33	6.43	2.36	6.36	2.37	6.28	2.38	6.16	2.41	6.05	2.43
							-5	7.91	2.41	7.71	2.44	7.53	2.47	7.45	2.49	7.38	2.50	7.24	2.53	7.12	2.55
							0	9.04	2.52	8.83	2.56	8.64	2.59	8.55	2.61	8.47	2.62	8.32	2.65	8.19	2.67
							2	9.49	2.56	9.27	2.60	9.08	2.64	8.99	2.65	8.91	2.67	8.76	2.69	8.62	2.72
							7	10.39	2.65	10.17	2.69	9.97	2.73	9.90	2.74	9.79	2.76	9.62	2.79	9.48	2.82
							10	11.29	2.74	11.06	2.78	10.85	2.82	10.76	2.84	10.66	2.85	10.49	2.88	10.34	2.91
							15	12.42	2.85	12.18	2.89	11.96	2.93	11.86	2.95	11.76	2.97	11.58	3.00	11.42	3.03
2000	2000	2000	6800		12800	128%	-15	6.10	2.23	5.91	2.27	5.74	2.30	5.66	2.31	5.59	2.32	5.47	2.35	5.36	2.36
							-10	7.31	2.35	7.11	2.39	6.93	2.42	6.84	2.43	6.77	2.44	6.63	2.47	6.51	2.49
							-5	8.52	2.47	8.31	2.50	8.11	2.54	8.03	2.55	7.94	2.57	7.79	2.59	7.67	2.61
							0	9.73	2.58	9.51	2.62	9.30	2.66	9.21	2.67	9.12	2.69	8.96	2.71	8.82	2.74
							2	10.22	2.63	9.99	2.67	9.78	2.70	9.68	2.72	9.59	2.73	9.43	2.76	9.28	2.79
							7	11.19	2.72	10.95	2.76	10.73	2.80	10.66	2.81	10.54	2.83	10.36	2.86	10.21	2.89
							10	12.16	2.81	11.91	2.85	11.69	2.89	11.58	2.91	11.48	2.93	11.30	2.96	11.14	2.98
							15	13.38	2.92	13.12	2.97	12.88	3.01	12.77	3.03	12.67	3.04	12.47	3.08	12.30	3.11
2000	2000	2500	2500		9000	90%	-15	5.58	2.06	5.40	2.09	5.25	2.12	5.18	2.13	5.11	2.14	4.99	2.16	4.90	2.18
							-10	6.68	2.17	6.49	2.20	6.33	2.23	6.25	2.24	6.18	2.25	6.06	2.28	5.95	2.29
							-5	7.78	2.27	7.59	2.31	7.41	2.34	7.33	2.35	7.26	2.37	7.12	2.39	7.00	2.41
							0	8.89	2.38	8.69	2.42	8.50	2.45	8.41	2.46	8.33	2.48	8.19	2.50	8.06	2.52
							2	9.33	2.42	9.12	2.46	8.93	2.49	8.85	2.51	8.76	2.52	8.61	2.55	8.48	2.57
							7	10.22	2.51	10.00	2.54	9.81	2.58	9.74	2.59	9.63	2.61	9.47	2.64	9.33	2.66
							10	11.11	2.59	10.88	2.63	10.68	2.66	10.58	2.68	10.49	2.70	10.32	2.73	10.18	2.75
							15	12.22	2.69	11.99	2.73	11.77	2.77	11.67	2.79	11.57	2.81	11.40	2.84	11.24	2.86

12. Capacity Table

12-5. AJ100TXJ5KH/EA

HEATING

Combination (Capacity Index)					Combination (Total)	Combination (%)	Outdoor Temperature (°C,DB)	Indoor Temperature (°C, DB)													
								14		16		18		20		21		22		24	
								TC(kW)	PI(kW)	TC(kW)	PI(kW)	TC(kW)	PI(kW)	TC(kW)	PI(kW)	TC(kW)	PI(kW)	TC(kW)	PI(kW)	TC(kW)	PI(kW)
2000	2000	2500	3500		10000	100%	-15	5.60	2.13	5.43	2.16	5.27	2.19	5.20	2.20	5.14	2.22	5.02	2.24	4.92	2.25
							-10	6.71	2.24	6.53	2.28	6.36	2.31	6.29	2.32	6.21	2.33	6.09	2.35	5.98	2.37
							-5	7.82	2.35	7.63	2.39	7.45	2.42	7.37	2.43	7.29	2.45	7.16	2.47	7.04	2.49
							0	8.94	2.46	8.73	2.50	8.54	2.53	8.46	2.55	8.38	2.56	8.23	2.59	8.10	2.61
							2	9.38	2.51	9.17	2.54	8.98	2.58	8.89	2.59	8.81	2.61	8.66	2.64	8.53	2.66
							7	10.27	2.59	10.05	2.63	9.86	2.67	9.79	2.68	9.68	2.70	9.52	2.73	9.38	2.75
							10	11.17	2.68	10.94	2.72	10.73	2.76	10.64	2.77	10.54	2.79	10.38	2.82	10.23	2.85
							15	12.28	2.79	12.05	2.83	11.83	2.87	11.73	2.89	11.63	2.90	11.45	2.93	11.30	2.96
2000	2000	2500	5000		11500	115%	-15	5.73	2.18	5.55	2.21	5.39	2.24	5.32	2.25	5.25	2.26	5.13	2.29	5.03	2.31
							-10	6.86	2.29	6.67	2.33	6.50	2.36	6.43	2.37	6.35	2.38	6.22	2.41	6.12	2.43
							-5	8.00	2.41	7.80	2.44	7.62	2.47	7.54	2.49	7.46	2.50	7.32	2.53	7.20	2.55
							0	9.14	2.52	8.93	2.56	8.73	2.59	8.65	2.61	8.56	2.62	8.41	2.65	8.28	2.67
							2	9.59	2.56	9.38	2.60	9.18	2.64	9.09	2.65	9.01	2.67	8.85	2.69	8.72	2.72
							7	10.50	2.65	10.28	2.69	10.08	2.73	10.01	2.74	9.89	2.76	9.73	2.79	9.59	2.82
							10	11.42	2.74	11.19	2.78	10.97	2.82	10.88	2.84	10.78	2.85	10.61	2.88	10.46	2.91
							15	12.56	2.85	12.32	2.89	12.10	2.93	11.99	2.95	11.89	2.97	11.71	3.00	11.55	3.03
2000	2000	2500	6800		13300	133%	-15	6.16	2.27	5.97	2.30	5.80	2.33	5.72	2.34	5.65	2.36	5.52	2.38	5.41	2.40
							-10	7.38	2.38	7.17	2.42	6.99	2.45	6.91	2.47	6.83	2.48	6.69	2.50	6.57	2.53
							-5	8.60	2.50	8.38	2.54	8.19	2.57	8.10	2.59	8.02	2.60	7.87	2.63	7.74	2.65
							0	9.82	2.62	9.59	2.66	9.39	2.69	9.29	2.71	9.21	2.73	9.04	2.75	8.90	2.78
							2	10.31	2.67	10.08	2.71	9.87	2.74	9.77	2.76	9.68	2.77	9.52	2.80	9.37	2.83
							7	11.29	2.76	11.05	2.80	10.83	2.84	10.76	2.85	10.64	2.87	10.46	2.90	10.31	2.93
							10	12.27	2.85	12.02	2.89	11.80	2.93	11.69	2.95	11.59	2.97	11.41	3.00	11.24	3.03
							15	13.50	2.96	13.24	3.01	13.00	3.05	12.89	3.07	12.78	3.09	12.59	3.12	12.42	3.15
2000	2000	3500	3500		11000	110%	-15	5.66	2.17	5.48	2.20	5.32	2.23	5.25	2.24	5.18	2.26	5.07	2.28	4.97	2.30
							-10	6.78	2.28	6.59	2.32	6.42	2.35	6.34	2.36	6.27	2.38	6.14	2.40	6.04	2.42
							-5	7.90	2.40	7.70	2.43	7.52	2.46	7.44	2.48	7.36	2.49	7.22	2.52	7.11	2.54
							0	9.02	2.51	8.81	2.55	8.62	2.58	8.53	2.60	8.45	2.61	8.30	2.64	8.18	2.66
							2	9.47	2.55	9.26	2.59	9.06	2.63	8.97	2.64	8.89	2.66	8.74	2.68	8.61	2.71
							7	10.37	2.64	10.15	2.68	9.95	2.72	9.88	2.73	9.77	2.75	9.60	2.78	9.46	2.80
							10	11.27	2.73	11.04	2.77	10.83	2.81	10.73	2.83	10.64	2.84	10.47	2.87	10.32	2.90
							15	12.40	2.84	12.16	2.88	11.94	2.92	11.84	2.94	11.74	2.96	11.56	2.99	11.40	3.02
2000	2000	3500	5000		12500	125%	-15	6.10	2.22	5.91	2.25	5.74	2.28	5.66	2.29	5.59	2.31	5.47	2.33	5.36	2.35
							-10	7.31	2.33	7.11	2.37	6.93	2.40	6.84	2.41	6.77	2.43	6.63	2.45	6.51	2.47
							-5	8.52	2.45	8.31	2.49	8.11	2.52	8.03	2.53	7.94	2.55	7.79	2.57	7.67	2.60
							0	9.73	2.56	9.51	2.60	9.30	2.64	9.21	2.65	9.12	2.67	8.96	2.70	8.82	2.72
							2	10.22	2.61	9.99	2.65	9.78	2.68	9.68	2.70	9.59	2.72	9.43	2.74	9.28	2.77
							7	11.19	2.70	10.95	2.74	10.73	2.78	10.66	2.79	10.54	2.81	10.36	2.84	10.21	2.87
							10	12.16	2.79	11.91	2.83	11.69	2.87	11.58	2.89	11.48	2.90	11.30	2.94	11.14	2.96
							15	13.38	2.90	13.12	2.95	12.88	2.99	12.77	3.00	12.67	3.02	12.47	3.05	12.30	3.08
2000	2000	3500	6800		14300	143%	-15	6.19	2.31	6.00	2.34	5.83	2.37	5.75	2.38	5.68	2.40	5.55	2.42	5.44	2.44
							-10	7.42	2.43	7.21	2.46	7.03	2.49	6.95	2.51	6.87	2.52	6.73	2.55	6.61	2.57
							-5	8.65	2.55	8.43	2.58	8.23	2.62	8.15	2.63	8.06	2.65	7.91	2.68	7.78	2.70
							0	9.88	2.66	9.65	2.70	9.44	2.74	9.35	2.76	9.26	2.77	9.09	2.80	8.95	2.83
							2	10.37	2.71	10.14	2.75	9.92	2.79	9.83	2.81	9.74	2.82	9.57	2.85	9.42	2.88
							7	11.35	2.81	11.11	2.85	10.89	2.89	10.82	2.90	10.69	2.92	10.52	2.95	10.36	2.98
							10	12.34	2.90	12.09	2.94	11.86	2.98	11.76	3.00	11.65	3.02	11.47	3.05	11.31	3.08
							15	13.58	3.02	13.31	3.06	13.07	3.10	12.96	3.12	12.86	3.14	12.66	3.18	12.48	3.21

12. Capacity Table

12-5. AJ100TXJ5KH/EA

HEATING

Combination (Capacity Index)					Combination (Total)	Combination (%)	Outdoor Temperature (°C,DB)	Indoor Temperature (°C, DB)													
								14		16		18		20		21		22		24	
								TC(kW)	PI(kW)	TC(kW)	PI(kW)	TC(kW)	PI(kW)	TC(kW)	PI(kW)	TC(kW)	PI(kW)	TC(kW)	PI(kW)	TC(kW)	PI(kW)
2000	2000	5000	5000		14000	140%	-15	6.22	2.30	6.02	2.33	5.85	2.36	5.77	2.38	5.70	2.39	5.57	2.41	5.46	2.43
							-10	7.45	2.42	7.24	2.45	7.06	2.49	6.97	2.50	6.89	2.51	6.75	2.54	6.63	2.56
							-5	8.68	2.54	8.46	2.57	8.27	2.61	8.18	2.62	8.09	2.64	7.94	2.67	7.81	2.69
							0	9.91	2.66	9.68	2.70	9.48	2.73	9.38	2.75	9.29	2.76	9.13	2.79	8.99	2.82
							2	10.41	2.70	10.17	2.74	9.96	2.78	9.86	2.80	9.77	2.81	9.60	2.84	9.46	2.87
							7	11.40	2.80	11.15	2.84	10.93	2.88	10.86	2.89	10.73	2.91	10.56	2.94	10.40	2.97
							10	12.39	2.89	12.14	2.93	11.91	2.97	11.80	2.99	11.70	3.01	11.51	3.04	11.35	3.07
							15	13.63	3.01	13.36	3.05	13.12	3.09	13.01	3.11	12.90	3.13	12.71	3.16	12.53	3.19
2000	2000	5000	6800		15800	158%	-15	6.30	2.35	6.10	2.39	5.92	2.42	5.85	2.43	5.77	2.45	5.64	2.47	5.53	2.49
							-10	7.54	2.48	7.33	2.51	7.15	2.55	7.06	2.56	6.98	2.58	6.84	2.60	6.72	2.62
							-5	8.79	2.60	8.57	2.64	8.37	2.67	8.28	2.69	8.20	2.70	8.04	2.73	7.91	2.75
							0	10.04	2.72	9.81	2.76	9.60	2.80	9.50	2.81	9.41	2.83	9.25	2.86	9.10	2.89
							2	10.54	2.77	10.30	2.81	10.09	2.85	9.99	2.86	9.90	2.88	9.73	2.91	9.58	2.94
							7	11.54	2.86	11.30	2.91	11.07	2.95	11.00	2.96	10.87	2.98	10.69	3.01	10.54	3.04
							10	12.55	2.96	12.29	3.00	12.06	3.04	11.95	3.06	11.85	3.08	11.66	3.11	11.49	3.14
							15	13.80	3.08	13.54	3.12	13.29	3.17	13.18	3.19	13.07	3.21	12.87	3.24	12.69	3.27
2000	2500	2500	2500		9500	95%	-15	5.64	2.16	5.47	2.19	5.31	2.22	5.24	2.24	5.17	2.25	5.06	2.27	4.96	2.29
							-10	6.76	2.28	6.57	2.31	6.41	2.34	6.33	2.35	6.26	2.37	6.13	2.39	6.02	2.41
							-5	7.88	2.39	7.68	2.42	7.50	2.46	7.42	2.47	7.35	2.48	7.21	2.51	7.09	2.53
							0	9.00	2.50	8.79	2.54	8.60	2.57	8.52	2.59	8.44	2.60	8.29	2.63	8.16	2.65
							2	9.45	2.54	9.24	2.58	9.04	2.62	8.96	2.63	8.87	2.65	8.72	2.67	8.59	2.70
							7	10.35	2.63	10.13	2.67	9.93	2.71	9.86	2.72	9.75	2.74	9.59	2.77	9.44	2.79
							10	11.25	2.72	11.02	2.76	10.81	2.80	10.71	2.82	10.62	2.83	10.45	2.86	10.30	2.89
							15	12.37	2.83	12.13	2.87	11.91	2.91	11.81	2.93	11.72	2.95	11.54	2.98	11.38	3.01
2000	2500	2500	3500		10500	105%	-15	5.68	2.20	5.51	2.23	5.35	2.26	5.28	2.28	5.21	2.29	5.09	2.31	4.99	2.33
							-10	6.81	2.32	6.62	2.35	6.45	2.38	6.38	2.40	6.30	2.41	6.17	2.43	6.07	2.45
							-5	7.94	2.43	7.74	2.47	7.56	2.50	7.48	2.52	7.40	2.53	7.26	2.56	7.14	2.58
							0	9.06	2.55	8.85	2.58	8.67	2.62	8.58	2.63	8.50	2.65	8.35	2.68	8.22	2.70
							2	9.52	2.59	9.30	2.63	9.11	2.66	9.02	2.68	8.94	2.70	8.78	2.72	8.65	2.75
							7	10.42	2.68	10.20	2.72	10.00	2.76	9.93	2.77	9.81	2.79	9.65	2.82	9.51	2.85
							10	11.33	2.77	11.10	2.81	10.89	2.85	10.79	2.87	10.70	2.88	10.53	2.91	10.38	2.94
							15	12.46	2.88	12.22	2.92	12.00	2.96	11.90	2.98	11.80	3.00	11.62	3.03	11.46	3.06
2000	2500	2500	5000		12000	120%	-15	6.11	2.25	5.92	2.28	5.75	2.31	5.67	2.33	5.60	2.34	5.48	2.36	5.37	2.38
							-10	7.32	2.37	7.12	2.40	6.94	2.43	6.86	2.45	6.78	2.46	6.64	2.49	6.52	2.51
							-5	8.54	2.48	8.32	2.52	8.13	2.55	8.04	2.57	7.96	2.58	7.81	2.61	7.68	2.63
							0	9.75	2.60	9.52	2.64	9.32	2.67	9.23	2.69	9.14	2.71	8.98	2.73	8.84	2.76
							2	10.23	2.65	10.00	2.69	9.80	2.72	9.70	2.74	9.61	2.75	9.45	2.78	9.30	2.81
							7	11.21	2.74	10.97	2.78	10.75	2.82	10.68	2.83	10.56	2.85	10.38	2.88	10.23	2.91
							10	12.18	2.83	11.93	2.87	11.71	2.91	11.60	2.93	11.50	2.95	11.32	2.98	11.16	3.01
							15	13.40	2.94	13.14	2.99	12.91	3.03	12.79	3.05	12.69	3.07	12.50	3.10	12.32	3.13
2000	2500	2500	6800		13800	138%	-15	6.22	2.34	6.02	2.37	5.85	2.40	5.77	2.42	5.70	2.43	5.57	2.45	5.46	2.47
							-10	7.45	2.46	7.24	2.50	7.06	2.53	6.97	2.54	6.89	2.56	6.75	2.58	6.63	2.61
							-5	8.68	2.58	8.46	2.62	8.27	2.65	8.18	2.67	8.09	2.69	7.94	2.71	7.81	2.74
							0	9.91	2.70	9.68	2.74	9.48	2.78	9.38	2.80	9.29	2.81	9.13	2.84	8.99	2.87
							2	10.41	2.75	10.17	2.79	9.96	2.83	9.86	2.85	9.77	2.86	9.60	2.89	9.46	2.92
							7	11.40	2.84	11.15	2.89	10.93	2.93	10.86	2.94	10.73	2.96	10.56	2.99	10.40	3.02
							10	12.39	2.94	12.14	2.98	11.91	3.02	11.80	3.04	11.70	3.06	11.51	3.09	11.35	3.12
							15	13.63	3.06	13.36	3.10	13.12	3.15	13.01	3.17	12.90	3.18	12.71	3.22	12.53	3.25

12. Capacity Table

12-5. AJ100TXJ5KH/EA

HEATING

Combination (Capacity Index)					Combination (Total)	Combination (%)	Outdoor Temperature (°C,DB)	Indoor Temperature (°C, DB)													
								14		16		18		20		21		22		24	
								TC(kW)	PI(kW)	TC(kW)	PI(kW)	TC(kW)	PI(kW)	TC(kW)	PI(kW)	TC(kW)	PI(kW)	TC(kW)	PI(kW)	TC(kW)	PI(kW)
2000	2500	3500	3500		11500	115%	-15	5.72	2.17	5.54	2.20	5.38	2.23	5.31	2.24	5.24	2.26	5.12	2.28	5.02	2.30
							-10	6.85	2.28	6.66	2.32	6.49	2.35	6.41	2.36	6.34	2.38	6.21	2.40	6.10	2.42
							-5	7.98	2.40	7.78	2.43	7.60	2.46	7.52	2.48	7.44	2.49	7.30	2.52	7.18	2.54
							0	9.12	2.51	8.91	2.55	8.72	2.58	8.63	2.60	8.55	2.61	8.40	2.64	8.27	2.66
							2	9.57	2.55	9.36	2.59	9.16	2.63	9.07	2.64	8.99	2.66	8.83	2.68	8.70	2.71
							7	10.48	2.64	10.26	2.68	10.06	2.72	9.99	2.73	9.87	2.75	9.71	2.78	9.57	2.80
							10	11.39	2.73	11.16	2.77	10.95	2.81	10.85	2.83	10.76	2.84	10.59	2.87	10.44	2.90
							15	12.54	2.84	12.29	2.88	12.07	2.92	11.97	2.94	11.87	2.96	11.69	2.99	11.53	3.02
2000	2500	3500	5000		13000	130%	-15	6.17	2.26	5.97	2.29	5.80	2.32	5.72	2.33	5.65	2.35	5.52	2.37	5.42	2.39
							-10	7.39	2.38	7.18	2.41	7.00	2.44	6.91	2.46	6.84	2.47	6.70	2.50	6.58	2.52
							-5	8.61	2.49	8.39	2.53	8.20	2.56	8.11	2.58	8.02	2.59	7.87	2.62	7.75	2.64
							0	9.83	2.61	9.60	2.65	9.40	2.68	9.30	2.70	9.21	2.72	9.05	2.74	8.91	2.77
							2	10.32	2.66	10.09	2.70	9.88	2.73	9.78	2.75	9.69	2.76	9.52	2.79	9.38	2.82
							7	11.30	2.75	11.06	2.79	10.84	2.83	10.77	2.84	10.65	2.86	10.47	2.89	10.32	2.92
							10	12.28	2.84	12.03	2.88	11.81	2.92	11.70	2.94	11.60	2.96	11.42	2.99	11.25	3.02
							15	13.51	2.95	13.25	3.00	13.01	3.04	12.90	3.06	12.80	3.08	12.60	3.11	12.43	3.14
2000	2500	3500	6800		14800	148%	-15	6.30	2.34	6.10	2.37	5.92	2.40	5.85	2.42	5.77	2.43	5.64	2.45	5.53	2.47
							-10	7.54	2.46	7.33	2.50	7.15	2.53	7.06	2.54	6.98	2.56	6.84	2.58	6.72	2.61
							-5	8.79	2.58	8.57	2.62	8.37	2.65	8.28	2.67	8.20	2.69	8.04	2.71	7.91	2.74
							0	10.04	2.70	9.81	2.74	9.60	2.78	9.50	2.80	9.41	2.81	9.25	2.84	9.10	2.87
							2	10.54	2.75	10.30	2.79	10.09	2.83	9.99	2.85	9.90	2.86	9.73	2.89	9.58	2.92
							7	11.54	2.84	11.30	2.89	11.07	2.93	11.00	2.94	10.87	2.96	10.69	2.99	10.54	3.02
							10	12.55	2.94	12.29	2.98	12.06	3.02	11.95	3.04	11.85	3.06	11.66	3.09	11.49	3.12
							15	13.80	3.06	13.54	3.10	13.29	3.15	13.18	3.17	13.07	3.18	12.87	3.22	12.69	3.25
2000	2500	5000	5000		14500	145%	-15	6.30	2.34	6.10	2.37	5.92	2.40	5.85	2.42	5.77	2.43	5.64	2.45	5.53	2.47
							-10	7.54	2.46	7.33	2.50	7.15	2.53	7.06	2.54	6.98	2.56	6.84	2.58	6.72	2.61
							-5	8.79	2.58	8.57	2.62	8.37	2.65	8.28	2.67	8.20	2.69	8.04	2.71	7.91	2.74
							0	10.04	2.70	9.81	2.74	9.60	2.78	9.50	2.80	9.41	2.81	9.25	2.84	9.10	2.87
							2	10.54	2.75	10.30	2.79	10.09	2.83	9.99	2.85	9.90	2.86	9.73	2.89	9.58	2.92
							7	11.54	2.84	11.30	2.89	11.07	2.93	11.00	2.94	10.87	2.96	10.69	2.99	10.54	3.02
							10	12.55	2.94	12.29	2.98	12.06	3.02	11.95	3.04	11.85	3.06	11.66	3.09	11.49	3.12
							15	13.80	3.06	13.54	3.10	13.29	3.15	13.18	3.17	13.07	3.18	12.87	3.22	12.69	3.25
2000	2500	5000	6800		16300	163%	-15	6.30	2.39	6.10	2.42	5.92	2.45	5.85	2.47	5.77	2.48	5.64	2.50	5.53	2.52
							-10	7.54	2.51	7.33	2.55	7.15	2.58	7.06	2.60	6.98	2.61	6.84	2.64	6.72	2.66
							-5	8.79	2.63	8.57	2.67	8.37	2.71	8.28	2.72	8.20	2.74	8.04	2.77	7.91	2.79
							0	10.04	2.76	9.81	2.80	9.60	2.84	9.50	2.85	9.41	2.87	9.25	2.90	9.10	2.92
							2	10.54	2.81	10.30	2.85	10.09	2.89	9.99	2.90	9.90	2.92	9.73	2.95	9.58	2.98
							7	11.54	2.90	11.30	2.95	11.07	2.99	11.00	3.00	10.87	3.02	10.69	3.05	10.54	3.08
							10	12.55	3.00	12.29	3.04	12.06	3.09	11.95	3.10	11.85	3.12	11.66	3.16	11.49	3.19
							15	13.80	3.12	13.54	3.17	13.29	3.21	13.18	3.23	13.07	3.25	12.87	3.28	12.69	3.32
2000	3500	3500	3500		12500	125%	-15	5.75	2.21	5.57	2.24	5.41	2.27	5.34	2.29	5.27	2.30	5.15	2.32	5.05	2.34
							-10	6.89	2.33	6.70	2.36	6.53	2.39	6.45	2.41	6.38	2.42	6.25	2.44	6.14	2.46
							-5	8.03	2.44	7.83	2.48	7.65	2.51	7.57	2.52	7.49	2.54	7.35	2.56	7.23	2.59
							0	9.17	2.55	8.96	2.59	8.77	2.63	8.68	2.64	8.60	2.66	8.45	2.69	8.32	2.71
							2	9.63	2.60	9.41	2.64	9.22	2.67	9.13	2.69	9.04	2.71	8.89	2.73	8.75	2.76
							7	10.55	2.69	10.32	2.73	10.12	2.77	10.05	2.78	9.93	2.80	9.77	2.83	9.63	2.86
							10	11.46	2.78	11.23	2.82	11.02	2.86	10.92	2.88	10.82	2.89	10.65	2.93	10.50	2.95
							15	12.61	2.89	12.37	2.93	12.14	2.97	12.04	2.99	11.94	3.01	11.76	3.04	11.60	3.07

12. Capacity Table

12-5. AJ100TXJ5KH/EA

HEATING

Combination (Capacity Index)					Combination (Total)	Combination (%)	Outdoor Temperature (°C,DB)	Indoor Temperature (°C, DB)													
								14		16		18		20		21		22		24	
								TC(kW)	PI(kW)	TC(kW)	PI(kW)	TC(kW)	PI(kW)	TC(kW)	PI(kW)	TC(kW)	PI(kW)	TC(kW)	PI(kW)	TC(kW)	PI(kW)
2000	3500	3500	5000		14000	140%	-15	6.19	2.29	6.00	2.32	5.83	2.35	5.75	2.37	5.68	2.38	5.55	2.40	5.44	2.42
							-10	7.42	2.41	7.21	2.45	7.03	2.48	6.95	2.49	6.87	2.51	6.73	2.53	6.61	2.55
							-5	8.65	2.53	8.43	2.57	8.23	2.60	8.15	2.62	8.06	2.63	7.91	2.66	7.78	2.68
							0	9.88	2.65	9.65	2.69	9.44	2.72	9.35	2.74	9.26	2.75	9.09	2.78	8.95	2.81
							2	10.37	2.69	10.14	2.73	9.92	2.77	9.83	2.79	9.74	2.80	9.57	2.83	9.42	2.86
							7	11.35	2.79	11.11	2.83	10.89	2.87	10.82	2.88	10.69	2.90	10.52	2.93	10.36	2.96
							10	12.34	2.88	12.09	2.92	11.86	2.96	11.76	2.98	11.65	3.00	11.47	3.03	11.31	3.06
							15	13.58	3.00	13.31	3.04	13.07	3.08	12.96	3.10	12.86	3.12	12.66	3.15	12.48	3.18
2000	3500	3500	6800		15800	158%	-15	6.30	2.35	6.10	2.38	5.92	2.41	5.85	2.43	5.77	2.44	5.64	2.46	5.53	2.48
							-10	7.54	2.47	7.33	2.50	7.15	2.54	7.06	2.55	6.98	2.57	6.84	2.59	6.72	2.61
							-5	8.79	2.59	8.57	2.63	8.37	2.66	8.28	2.68	8.20	2.69	8.04	2.72	7.91	2.75
							0	10.04	2.71	9.81	2.75	9.60	2.79	9.50	2.80	9.41	2.82	9.25	2.85	9.10	2.88
							2	10.54	2.76	10.30	2.80	10.09	2.84	9.99	2.85	9.90	2.87	9.73	2.90	9.58	2.93
							7	11.54	2.85	11.30	2.90	11.07	2.94	11.00	2.95	10.87	2.97	10.69	3.00	10.54	3.03
							10	12.55	2.95	12.29	2.99	12.06	3.03	11.95	3.05	11.85	3.07	11.66	3.10	11.49	3.13
							15	13.80	3.07	13.54	3.11	13.29	3.16	13.18	3.18	13.07	3.19	12.87	3.23	12.69	3.26
2000	3500	5000	5000		15500	155%	-15	6.30	2.34	6.10	2.37	5.92	2.40	5.85	2.42	5.77	2.43	5.64	2.45	5.53	2.47
							-10	7.54	2.46	7.33	2.50	7.15	2.53	7.06	2.54	6.98	2.56	6.84	2.58	6.72	2.61
							-5	8.79	2.58	8.57	2.62	8.37	2.65	8.28	2.67	8.20	2.69	8.04	2.71	7.91	2.74
							0	10.04	2.70	9.81	2.74	9.60	2.78	9.50	2.80	9.41	2.81	9.25	2.84	9.10	2.87
							2	10.54	2.75	10.30	2.79	10.09	2.83	9.99	2.85	9.90	2.86	9.73	2.89	9.58	2.92
							7	11.54	2.84	11.30	2.89	11.07	2.93	11.00	2.94	10.87	2.96	10.69	2.99	10.54	3.02
							10	12.55	2.94	12.29	2.98	12.06	3.02	11.95	3.04	11.85	3.06	11.66	3.09	11.49	3.12
							15	13.80	3.06	13.54	3.10	13.29	3.15	13.18	3.17	13.07	3.18	12.87	3.22	12.69	3.25
2000	3500	5000	6800		17300	173%	-15	6.30	2.42	6.10	2.46	5.92	2.49	5.85	2.51	5.77	2.52	5.64	2.55	5.53	2.57
							-10	7.54	2.55	7.33	2.59	7.15	2.62	7.06	2.64	6.98	2.65	6.84	2.68	6.72	2.70
							-5	8.79	2.68	8.57	2.72	8.37	2.75	8.28	2.77	8.20	2.79	8.04	2.81	7.91	2.84
							0	10.04	2.80	9.81	2.84	9.60	2.88	9.50	2.90	9.41	2.92	9.25	2.95	9.10	2.97
							2	10.54	2.85	10.30	2.89	10.09	2.93	9.99	2.95	9.90	2.97	9.73	3.00	9.58	3.03
							7	11.54	2.95	11.30	3.00	11.07	3.04	11.00	3.05	10.87	3.07	10.69	3.10	10.54	3.13
							10	12.55	3.05	12.29	3.10	12.06	3.14	11.95	3.16	11.85	3.18	11.66	3.21	11.49	3.24
							15	13.80	3.17	13.54	3.22	13.29	3.26	13.18	3.28	13.07	3.30	12.87	3.34	12.69	3.37
2000	5000	5000	5000		17000	170%	-15	6.30	2.42	6.10	2.46	5.92	2.49	5.85	2.51	5.77	2.52	5.64	2.55	5.53	2.57
							-10	7.54	2.55	7.33	2.59	7.15	2.62	7.06	2.64	6.98	2.65	6.84	2.68	6.72	2.70
							-5	8.79	2.68	8.57	2.72	8.37	2.75	8.28	2.77	8.20	2.79	8.04	2.81	7.91	2.84
							0	10.04	2.80	9.81	2.84	9.60	2.88	9.50	2.90	9.41	2.92	9.25	2.95	9.10	2.97
							2	10.54	2.85	10.30	2.89	10.09	2.93	9.99	2.95	9.90	2.97	9.73	3.00	9.58	3.03
							7	11.54	2.95	11.30	3.00	11.07	3.04	11.00	3.05	10.87	3.07	10.69	3.10	10.54	3.13
							10	12.55	3.05	12.29	3.10	12.06	3.14	11.95	3.16	11.85	3.18	11.66	3.21	11.49	3.24
							15	13.80	3.17	13.54	3.22	13.29	3.26	13.18	3.28	13.07	3.30	12.87	3.34	12.69	3.37
2500	2500	2500	2500		10000	100%	-15	5.70	2.23	5.52	2.27	5.36	2.30	5.29	2.31	5.23	2.32	5.11	2.35	5.01	2.36
							-10	6.83	2.35	6.64	2.39	6.47	2.42	6.39	2.43	6.32	2.44	6.19	2.47	6.08	2.49
							-5	7.96	2.47	7.76	2.50	7.58	2.54	7.50	2.55	7.42	2.57	7.28	2.59	7.16	2.61
							0	9.09	2.58	8.88	2.62	8.69	2.66	8.60	2.67	8.52	2.69	8.37	2.71	8.24	2.74
							2	9.54	2.63	9.33	2.67	9.14	2.70	9.05	2.72	8.96	2.73	8.81	2.76	8.67	2.79
							7	10.45	2.72	10.23	2.76	10.03	2.80	9.96	2.81	9.84	2.83	9.68	2.86	9.54	2.89
							10	11.36	2.81	11.13	2.85	10.92	2.89	10.82	2.91	10.73	2.93	10.56	2.96	10.41	2.98
							15	12.50	2.92	12.26	2.97	12.04	3.01	11.93	3.03	11.83	3.04	11.65	3.08	11.49	3.11

12. Capacity Table

12-5. AJ100TXJ5KH/EA

HEATING

Combination (Capacity Index)					Combination (Total)	Combination (%)	Outdoor Temperature (°C,DB)	Indoor Temperature (°C, DB)													
								14		16		18		20		21		22		24	
								TC(kW)	PI(kW)	TC(kW)	PI(kW)	TC(kW)	PI(kW)	TC(kW)	PI(kW)	TC(kW)	PI(kW)	TC(kW)	PI(kW)	TC(kW)	PI(kW)
2500	2500	2500	3500		11000	110%	-15	5.74	2.20	5.56	2.23	5.40	2.26	5.32	2.28	5.26	2.29	5.14	2.31	5.04	2.33
							-10	6.87	2.32	6.68	2.35	6.51	2.38	6.43	2.40	6.36	2.41	6.23	2.43	6.12	2.45
							-5	8.01	2.43	7.81	2.47	7.63	2.50	7.54	2.52	7.47	2.53	7.33	2.56	7.21	2.58
							0	9.15	2.55	8.93	2.58	8.74	2.62	8.66	2.63	8.57	2.65	8.42	2.68	8.29	2.70
							2	9.60	2.59	9.39	2.63	9.19	2.66	9.10	2.68	9.02	2.70	8.86	2.72	8.73	2.75
							7	10.51	2.68	10.29	2.72	10.09	2.76	10.02	2.77	9.90	2.79	9.74	2.82	9.60	2.85
							10	11.43	2.77	11.20	2.81	10.98	2.85	10.89	2.87	10.79	2.88	10.62	2.91	10.47	2.94
							15	12.57	2.88	12.33	2.92	12.11	2.96	12.00	2.98	11.91	3.00	11.72	3.03	11.56	3.06
2500	2500	2500	5000		12500	125%	-15	6.18	2.28	5.99	2.32	5.82	2.35	5.74	2.36	5.67	2.37	5.54	2.40	5.43	2.41
							-10	7.41	2.40	7.20	2.44	7.02	2.47	6.93	2.48	6.86	2.50	6.72	2.52	6.60	2.54
							-5	8.63	2.52	8.41	2.56	8.22	2.59	8.13	2.61	8.05	2.62	7.90	2.65	7.77	2.67
							0	9.86	2.64	9.63	2.68	9.42	2.71	9.33	2.73	9.24	2.74	9.08	2.77	8.94	2.80
							2	10.35	2.68	10.12	2.72	9.91	2.76	9.81	2.78	9.72	2.79	9.55	2.82	9.41	2.85
							7	11.33	2.78	11.09	2.82	10.87	2.86	10.80	2.87	10.67	2.89	10.50	2.92	10.35	2.95
							10	12.32	2.87	12.07	2.91	11.84	2.95	11.73	2.97	11.63	2.99	11.45	3.02	11.29	3.05
							15	13.55	2.98	13.29	3.03	13.05	3.07	12.94	3.09	12.83	3.11	12.64	3.14	12.46	3.17
2500	2500	2500	6800		14300	143%	-15	6.30	2.34	6.10	2.37	5.92	2.40	5.85	2.42	5.77	2.43	5.64	2.45	5.53	2.47
							-10	7.54	2.46	7.33	2.50	7.15	2.53	7.06	2.54	6.98	2.56	6.84	2.58	6.72	2.61
							-5	8.79	2.58	8.57	2.62	8.37	2.65	8.28	2.67	8.20	2.69	8.04	2.71	7.91	2.74
							0	10.04	2.70	9.81	2.74	9.60	2.78	9.50	2.80	9.41	2.81	9.25	2.84	9.10	2.87
							2	10.54	2.75	10.30	2.79	10.09	2.83	9.99	2.85	9.90	2.86	9.73	2.89	9.58	2.92
							7	11.54	2.84	11.30	2.89	11.07	2.93	11.00	2.94	10.87	2.96	10.69	2.99	10.54	3.02
							10	12.55	2.94	12.29	2.98	12.06	3.02	11.95	3.04	11.85	3.06	11.66	3.09	11.49	3.12
							15	13.80	3.06	13.54	3.10	13.29	3.15	13.18	3.17	13.07	3.18	12.87	3.22	12.69	3.25
2500	2500	3500	3500		12000	120%	-15	6.10	2.24	5.91	2.28	5.74	2.30	5.66	2.32	5.59	2.33	5.47	2.35	5.36	2.37
							-10	7.31	2.36	7.11	2.39	6.93	2.43	6.84	2.44	6.77	2.45	6.63	2.48	6.51	2.50
							-5	8.52	2.48	8.31	2.51	8.11	2.55	8.03	2.56	7.94	2.58	7.79	2.60	7.67	2.62
							0	9.73	2.59	9.51	2.63	9.30	2.66	9.21	2.68	9.12	2.70	8.96	2.72	8.82	2.75
							2	10.22	2.64	9.99	2.68	9.78	2.71	9.68	2.73	9.59	2.74	9.43	2.77	9.28	2.80
							7	11.19	2.73	10.95	2.77	10.73	2.81	10.66	2.82	10.54	2.84	10.36	2.87	10.21	2.90
							10	12.16	2.82	11.91	2.86	11.69	2.90	11.58	2.92	11.48	2.94	11.30	2.97	11.14	3.00
							15	13.38	2.93	13.12	2.98	12.88	3.02	12.77	3.04	12.67	3.05	12.47	3.09	12.30	3.12
2500	2500	3500	5000		13500	135%	-15	6.22	2.32	6.03	2.36	5.85	2.39	5.78	2.40	5.70	2.41	5.57	2.44	5.47	2.46
							-10	7.45	2.44	7.25	2.48	7.06	2.51	6.98	2.53	6.90	2.54	6.76	2.57	6.64	2.59
							-5	8.69	2.56	8.47	2.60	8.27	2.64	8.18	2.65	8.10	2.67	7.95	2.69	7.82	2.72
							0	9.92	2.68	9.69	2.72	9.49	2.76	9.39	2.78	9.30	2.79	9.14	2.82	9.00	2.85
							2	10.42	2.73	10.18	2.77	9.97	2.81	9.87	2.83	9.78	2.84	9.61	2.87	9.47	2.90
							7	11.41	2.83	11.16	2.87	10.94	2.91	10.87	2.92	10.74	2.94	10.57	2.97	10.41	3.00
							10	12.40	2.92	12.15	2.96	11.92	3.00	11.81	3.02	11.71	3.04	11.52	3.07	11.36	3.10
							15	13.64	3.04	13.38	3.08	13.13	3.12	13.02	3.14	12.92	3.16	12.72	3.20	12.54	3.23
2500	2500	3500	6800		15300	153%	-15	6.30	2.38	6.10	2.41	5.92	2.44	5.85	2.46	5.77	2.47	5.64	2.50	5.53	2.52
							-10	7.54	2.50	7.33	2.54	7.15	2.57	7.06	2.59	6.98	2.60	6.84	2.63	6.72	2.65
							-5	8.79	2.62	8.57	2.66	8.37	2.70	8.28	2.72	8.20	2.73	8.04	2.76	7.91	2.78
							0	10.04	2.75	9.81	2.79	9.60	2.83	9.50	2.84	9.41	2.86	9.25	2.89	9.10	2.91
							2	10.54	2.80	10.30	2.84	10.09	2.88	9.99	2.89	9.90	2.91	9.73	2.94	9.58	2.97
							7	11.54	2.89	11.30	2.94	11.07	2.98	11.00	2.99	10.87	3.01	10.69	3.04	10.54	3.07
							10	12.55	2.99	12.29	3.03	12.06	3.08	11.95	3.09	11.85	3.11	11.66	3.15	11.49	3.18
							15	13.80	3.11	13.54	3.16	13.29	3.20	13.18	3.22	13.07	3.24	12.87	3.27	12.69	3.31

12. Capacity Table

12-5. AJ100TXJ5KH/EA

HEATING

Combination (Capacity Index)					Combination (Total)	Combination (%)	Outdoor Temperature (°C,DB)	Indoor Temperature (°C, DB)													
								14		16		18		20		21		22		24	
								TC(kW)	PI(kW)	TC(kW)	PI(kW)	TC(kW)	PI(kW)	TC(kW)	PI(kW)	TC(kW)	PI(kW)	TC(kW)	PI(kW)	TC(kW)	PI(kW)
2500	2500	5000	5000		15000	150%	-15	6.30	2.37	6.10	2.40	5.92	2.44	5.85	2.45	5.77	2.46	5.64	2.49	5.53	2.51
							-10	7.54	2.49	7.33	2.53	7.15	2.56	7.06	2.58	6.98	2.59	6.84	2.62	6.72	2.64
							-5	8.79	2.62	8.57	2.66	8.37	2.69	8.28	2.71	8.20	2.72	8.04	2.75	7.91	2.77
							0	10.04	2.74	9.81	2.78	9.60	2.82	9.50	2.83	9.41	2.85	9.25	2.88	9.10	2.90
							2	10.54	2.79	10.30	2.83	10.09	2.87	9.99	2.88	9.90	2.90	9.73	2.93	9.58	2.96
							7	11.54	2.88	11.30	2.93	11.07	2.97	11.00	2.98	10.87	3.00	10.69	3.03	10.54	3.06
							10	12.55	2.98	12.29	3.02	12.06	3.07	11.95	3.08	11.85	3.10	11.66	3.14	11.49	3.17
							15	13.80	3.10	13.54	3.15	13.29	3.19	13.18	3.21	13.07	3.23	12.87	3.26	12.69	3.29
2500	2500	5000	6800		16800	168%	-15	6.30	2.46	6.10	2.49	5.92	2.53	5.85	2.54	5.77	2.55	5.64	2.58	5.53	2.60
							-10	7.54	2.59	7.33	2.62	7.15	2.66	7.06	2.67	6.98	2.69	6.84	2.72	6.72	2.74
							-5	8.79	2.71	8.57	2.75	8.37	2.79	8.28	2.81	8.20	2.82	8.04	2.85	7.91	2.88
							0	10.04	2.84	9.81	2.88	9.60	2.92	9.50	2.94	9.41	2.95	9.25	2.99	9.10	3.01
							2	10.54	2.89	10.30	2.93	10.09	2.97	9.99	2.99	9.90	3.01	9.73	3.04	9.58	3.07
							7	11.54	2.99	11.30	3.03	11.07	3.08	11.00	3.09	10.87	3.11	10.69	3.15	10.54	3.17
							10	12.55	3.09	12.29	3.14	12.06	3.18	11.95	3.20	11.85	3.22	11.66	3.25	11.49	3.28
							15	13.80	3.21	13.54	3.26	13.29	3.31	13.18	3.33	13.07	3.35	12.87	3.38	12.69	3.42
2500	3500	3500	3500		13000	130%	-15	6.15	2.25	5.96	2.28	5.79	2.31	5.71	2.33	5.64	2.34	5.51	2.36	5.41	2.38
							-10	7.37	2.37	7.17	2.40	6.98	2.43	6.90	2.45	6.82	2.46	6.68	2.49	6.57	2.51
							-5	8.59	2.48	8.38	2.52	8.18	2.55	8.09	2.57	8.01	2.58	7.86	2.61	7.73	2.63
							0	9.81	2.60	9.59	2.64	9.38	2.67	9.29	2.69	9.20	2.71	9.04	2.73	8.90	2.76
							2	10.30	2.65	10.07	2.69	9.86	2.72	9.76	2.74	9.67	2.75	9.51	2.78	9.36	2.81
							7	11.28	2.74	11.04	2.78	10.82	2.82	10.75	2.83	10.63	2.85	10.45	2.88	10.30	2.91
							10	12.26	2.83	12.01	2.87	11.78	2.91	11.68	2.93	11.58	2.95	11.39	2.98	11.23	3.01
							15	13.49	2.94	13.23	2.99	12.99	3.03	12.88	3.05	12.77	3.07	12.58	3.10	12.40	3.13
2500	3500	3500	5000		14500	145%	-15	6.30	2.33	6.10	2.36	5.92	2.39	5.85	2.41	5.77	2.42	5.64	2.45	5.53	2.46
							-10	7.54	2.45	7.33	2.49	7.15	2.52	7.06	2.54	6.98	2.55	6.84	2.57	6.72	2.60
							-5	8.79	2.57	8.57	2.61	8.37	2.65	8.28	2.66	8.20	2.68	8.04	2.70	7.91	2.73
							0	10.04	2.69	9.81	2.73	9.60	2.77	9.50	2.79	9.41	2.80	9.25	2.83	9.10	2.86
							2	10.54	2.74	10.30	2.78	10.09	2.82	9.99	2.84	9.90	2.85	9.73	2.88	9.58	2.91
							7	11.54	2.84	11.30	2.88	11.07	2.92	11.00	2.93	10.87	2.95	10.69	2.98	10.54	3.01
							10	12.55	2.93	12.29	2.97	12.06	3.01	11.95	3.03	11.85	3.05	11.66	3.08	11.49	3.11
							15	13.80	3.05	13.54	3.09	13.29	3.13	13.18	3.15	13.07	3.17	12.87	3.21	12.69	3.24
2500	3500	3500	6800		16300	163%	-15	6.30	2.38	6.10	2.41	5.92	2.44	5.85	2.46	5.77	2.47	5.64	2.50	5.53	2.52
							-10	7.54	2.50	7.33	2.54	7.15	2.57	7.06	2.59	6.98	2.60	6.84	2.63	6.72	2.65
							-5	8.79	2.62	8.57	2.66	8.37	2.70	8.28	2.72	8.20	2.73	8.04	2.76	7.91	2.78
							0	10.04	2.75	9.81	2.79	9.60	2.83	9.50	2.84	9.41	2.86	9.25	2.89	9.10	2.91
							2	10.54	2.80	10.30	2.84	10.09	2.88	9.99	2.89	9.90	2.91	9.73	2.94	9.58	2.97
							7	11.54	2.89	11.30	2.94	11.07	2.98	11.00	2.99	10.87	3.01	10.69	3.04	10.54	3.07
							10	12.55	2.99	12.29	3.03	12.06	3.08	11.95	3.09	11.85	3.11	11.66	3.15	11.49	3.18
							15	13.80	3.11	13.54	3.16	13.29	3.20	13.18	3.22	13.07	3.24	12.87	3.27	12.69	3.31
2500	3500	5000	5000		16000	160%	-15	6.30	2.38	6.10	2.41	5.92	2.44	5.85	2.46	5.77	2.47	5.64	2.50	5.53	2.52
							-10	7.54	2.50	7.33	2.54	7.15	2.57	7.06	2.59	6.98	2.60	6.84	2.63	6.72	2.65
							-5	8.79	2.62	8.57	2.66	8.37	2.70	8.28	2.72	8.20	2.73	8.04	2.76	7.91	2.78
							0	10.04	2.75	9.81	2.79	9.60	2.83	9.50	2.84	9.41	2.86	9.25	2.89	9.10	2.91
							2	10.54	2.80	10.30	2.84	10.09	2.88	9.99	2.89	9.90	2.91	9.73	2.94	9.58	2.97
							7	11.54	2.89	11.30	2.94	11.07	2.98	11.00	2.99	10.87	3.01	10.69	3.04	10.54	3.07
							10	12.55	2.99	12.29	3.03	12.06	3.08	11.95	3.09	11.85	3.11	11.66	3.15	11.49	3.18
							15	13.80	3.11	13.54	3.16	13.29	3.20	13.18	3.22	13.07	3.24	12.87	3.27	12.69	3.31

12. Capacity Table

12-5. AJ100TXJ5KH/EA

HEATING

Combination (Capacity Index)					Combination (Total)	Combination (%)	Outdoor Temperature (°C,DB)	Indoor Temperature (°C, DB)													
								14		16		18		20		21		22		24	
								TC(kW)	PI(kW)	TC(kW)	PI(kW)	TC(kW)	PI(kW)	TC(kW)	PI(kW)	TC(kW)	PI(kW)	TC(kW)	PI(kW)	TC(kW)	PI(kW)
3500	3500	3500	3500		14000	140%	-15	6.18	2.28	5.99	2.32	5.82	2.35	5.74	2.36	5.67	2.37	5.54	2.40	5.43	2.41
							-10	7.41	2.40	7.20	2.44	7.02	2.47	6.93	2.48	6.86	2.50	6.72	2.52	6.60	2.54
							-5	8.63	2.52	8.41	2.56	8.22	2.59	8.13	2.61	8.05	2.62	7.90	2.65	7.77	2.67
							0	9.86	2.64	9.63	2.68	9.42	2.71	9.33	2.73	9.24	2.74	9.08	2.77	8.94	2.80
							2	10.35	2.68	10.12	2.72	9.91	2.76	9.81	2.78	9.72	2.79	9.55	2.82	9.41	2.85
							7	11.33	2.78	11.09	2.82	10.87	2.86	10.80	2.87	10.67	2.89	10.50	2.92	10.35	2.95
							10	12.32	2.87	12.07	2.91	11.84	2.95	11.73	2.97	11.63	2.99	11.45	3.02	11.29	3.05
							15	13.55	2.98	13.29	3.03	13.05	3.07	12.94	3.09	12.83	3.11	12.64	3.14	12.46	3.17
3500	3500	3500	5000		15500	155%	-15	6.30	2.33	6.10	2.36	5.92	2.39	5.85	2.41	5.77	2.42	5.64	2.45	5.53	2.46
							-10	7.54	2.45	7.33	2.49	7.15	2.52	7.06	2.54	6.98	2.55	6.84	2.57	6.72	2.60
							-5	8.79	2.57	8.57	2.61	8.37	2.65	8.28	2.66	8.20	2.68	8.04	2.70	7.91	2.73
							0	10.04	2.69	9.81	2.73	9.60	2.77	9.50	2.79	9.41	2.80	9.25	2.83	9.10	2.86
							2	10.54	2.74	10.30	2.78	10.09	2.82	9.99	2.84	9.90	2.85	9.73	2.88	9.58	2.91
							7	11.54	2.84	11.30	2.88	11.07	2.92	11.00	2.93	10.87	2.95	10.69	2.98	10.54	3.01
							10	12.55	2.93	12.29	2.97	12.06	3.01	11.95	3.03	11.85	3.05	11.66	3.08	11.49	3.11
							15	13.80	3.05	13.54	3.09	13.29	3.13	13.18	3.15	13.07	3.17	12.87	3.21	12.69	3.24
3500	3500	3500	6800		17300	173%	-15	6.30	2.42	6.10	2.45	5.92	2.48	5.85	2.50	5.77	2.51	5.64	2.54	5.53	2.56
							-10	7.54	2.54	7.33	2.58	7.15	2.61	7.06	2.63	6.98	2.65	6.84	2.67	6.72	2.69
							-5	8.79	2.67	8.57	2.71	8.37	2.74	8.28	2.76	8.20	2.78	8.04	2.80	7.91	2.83
							0	10.04	2.79	9.81	2.84	9.60	2.87	9.50	2.89	9.41	2.91	9.25	2.94	9.10	2.96
							2	10.54	2.84	10.30	2.89	10.09	2.92	9.99	2.94	9.90	2.96	9.73	2.99	9.58	3.02
							7	11.54	2.94	11.30	2.99	11.07	3.03	11.00	3.04	10.87	3.06	10.69	3.09	10.54	3.12
							10	12.55	3.04	12.29	3.09	12.06	3.13	11.95	3.15	11.85	3.16	11.66	3.20	11.49	3.23
							15	13.80	3.16	13.54	3.21	13.29	3.25	13.18	3.27	13.07	3.29	12.87	3.33	12.69	3.36
3500	3500	5000	5000		17000	170%	-15	6.30	2.42	6.10	2.45	5.92	2.48	5.85	2.50	5.77	2.51	5.64	2.54	5.53	2.56
							-10	7.54	2.54	7.33	2.58	7.15	2.61	7.06	2.63	6.98	2.65	6.84	2.67	6.72	2.69
							-5	8.79	2.67	8.57	2.71	8.37	2.74	8.28	2.76	8.20	2.78	8.04	2.80	7.91	2.83
							0	10.04	2.79	9.81	2.84	9.60	2.87	9.50	2.89	9.41	2.91	9.25	2.94	9.10	2.96
							2	10.54	2.84	10.30	2.89	10.09	2.92	9.99	2.94	9.90	2.96	9.73	2.99	9.58	3.02
							7	11.54	2.94	11.30	2.99	11.07	3.03	11.00	3.04	10.87	3.06	10.69	3.09	10.54	3.12
							10	12.55	3.04	12.29	3.09	12.06	3.13	11.95	3.15	11.85	3.16	11.66	3.20	11.49	3.23
							15	13.80	3.16	13.54	3.21	13.29	3.25	13.18	3.27	13.07	3.29	12.87	3.33	12.69	3.36
2000	2000	2000	2000	2000	10000	100%	-15	6.30	2.36	6.10	2.40	5.92	2.43	5.85	2.44	5.77	2.45	5.64	2.48	5.53	2.50
							-10	7.54	2.48	7.33	2.52	7.15	2.55	7.06	2.57	6.98	2.58	6.84	2.61	6.72	2.63
							-5	8.79	2.61	8.57	2.65	8.37	2.68	8.28	2.70	8.20	2.71	8.04	2.74	7.91	2.76
							0	10.04	2.73	9.81	2.77	9.60	2.81	9.50	2.82	9.41	2.84	9.25	2.87	9.10	2.90
							2	10.54	2.78	10.30	2.82	10.09	2.86	9.99	2.87	9.90	2.89	9.73	2.92	9.58	2.95
							7	11.54	2.87	11.30	2.92	11.07	2.96	11.00	2.97	10.87	2.99	10.69	3.02	10.54	3.05
							10	12.55	2.97	12.29	3.01	12.06	3.05	11.95	3.07	11.85	3.09	11.66	3.13	11.49	3.15
							15	13.80	3.09	13.54	3.14	13.29	3.18	13.18	3.20	13.07	3.22	12.87	3.25	12.69	3.28
2000	2000	2000	2000	2500	10500	105%	-15	6.55	2.33	6.34	2.36	6.16	2.39	6.08	2.41	6.00	2.42	5.87	2.45	5.75	2.46
							-10	7.84	2.45	7.63	2.49	7.43	2.52	7.34	2.54	7.26	2.55	7.11	2.57	6.99	2.60
							-5	9.14	2.57	8.91	2.61	8.71	2.65	8.61	2.66	8.52	2.68	8.36	2.70	8.23	2.73
							0	10.44	2.69	10.20	2.73	9.98	2.77	9.88	2.79	9.79	2.80	9.62	2.83	9.47	2.86
							2	10.96	2.74	10.72	2.78	10.49	2.82	10.39	2.84	10.29	2.85	10.12	2.88	9.96	2.91
							7	12.01	2.84	11.75	2.88	11.52	2.92	11.44	2.93	11.31	2.95	11.12	2.98	10.96	3.01
							10	13.05	2.93	12.78	2.97	12.54	3.01	12.43	3.03	12.32	3.05	12.13	3.08	11.95	3.11
							15	14.35	3.05	14.08	3.09	13.82	3.13	13.71	3.15	13.59	3.17	13.38	3.21	13.20	3.24

12. Capacity Table

12-5. AJ100TXJ5KH/EA

HEATING

Combination (Capacity Index)					Combination (Total)	Combination (%)	Outdoor Temperature (°C,DB)	Indoor Temperature (°C, DB)													
								14		16		18		20		21		22		24	
								TC(kW)	PI(kW)	TC(kW)	PI(kW)	TC(kW)	PI(kW)	TC(kW)	PI(kW)	TC(kW)	PI(kW)	TC(kW)	PI(kW)	TC(kW)	PI(kW)
2000	2000	2000	2000	3500	11500	115%	-15	6.63	2.37	6.42	2.40	6.24	2.44	6.15	2.45	6.08	2.46	5.94	2.49	5.82	2.51
							-10	7.94	2.49	7.72	2.53	7.52	2.56	7.43	2.58	7.35	2.59	7.20	2.62	7.07	2.64
							-5	9.25	2.62	9.02	2.66	8.81	2.69	8.72	2.71	8.63	2.72	8.47	2.75	8.33	2.77
							0	10.57	2.74	10.33	2.78	10.10	2.82	10.00	2.83	9.91	2.85	9.73	2.88	9.58	2.90
							2	11.10	2.79	10.85	2.83	10.62	2.87	10.52	2.88	10.42	2.90	10.24	2.93	10.09	2.96
							7	12.15	2.88	11.89	2.93	11.66	2.97	11.58	2.98	11.45	3.00	11.26	3.03	11.09	3.06
							10	13.21	2.98	12.94	3.02	12.69	3.07	12.58	3.08	12.47	3.10	12.27	3.14	12.10	3.17
							15	14.53	3.10	14.25	3.15	13.99	3.19	13.87	3.21	13.76	3.23	13.55	3.26	13.36	3.29
2000	2000	2000	2000	5000	13000	130%	-15	6.58	2.42	6.38	2.45	6.19	2.48	6.11	2.50	6.03	2.51	5.90	2.54	5.78	2.56
							-10	7.89	2.54	7.67	2.58	7.47	2.61	7.38	2.63	7.30	2.65	7.15	2.67	7.03	2.69
							-5	9.19	2.67	8.96	2.71	8.75	2.74	8.66	2.76	8.57	2.78	8.41	2.80	8.27	2.83
							0	10.50	2.79	10.25	2.84	10.04	2.87	9.93	2.89	9.84	2.91	9.67	2.94	9.52	2.96
							2	11.02	2.84	10.77	2.89	10.55	2.92	10.45	2.94	10.35	2.96	10.17	2.99	10.02	3.02
							7	12.07	2.94	11.81	2.99	11.58	3.03	11.50	3.04	11.37	3.06	11.18	3.09	11.02	3.12
							10	13.12	3.04	12.85	3.09	12.61	3.13	12.49	3.15	12.39	3.16	12.19	3.20	12.02	3.23
							15	14.43	3.16	14.15	3.21	13.90	3.25	13.78	3.27	13.66	3.29	13.46	3.33	13.27	3.36
2000	2000	2000	2000	6800	14800	148%	-15	6.83	2.50	6.62	2.53	6.43	2.57	6.34	2.58	6.26	2.60	6.12	2.62	6.00	2.64
							-10	8.18	2.63	7.95	2.67	7.75	2.70	7.66	2.72	7.57	2.73	7.42	2.76	7.29	2.78
							-5	9.53	2.76	9.29	2.80	9.08	2.83	8.98	2.85	8.89	2.87	8.72	2.90	8.58	2.92
							0	10.89	2.89	10.64	2.93	10.41	2.97	10.31	2.99	10.21	3.00	10.03	3.03	9.87	3.06
							2	11.43	2.94	11.18	2.98	10.94	3.02	10.84	3.04	10.73	3.06	10.55	3.09	10.39	3.12
							7	12.52	3.04	12.25	3.08	12.01	3.13	11.93	3.14	11.79	3.16	11.60	3.20	11.43	3.23
							10	13.61	3.14	13.33	3.19	13.08	3.23	12.96	3.25	12.85	3.27	12.65	3.30	12.47	3.34
							15	14.97	3.27	14.68	3.31	14.42	3.36	14.29	3.38	14.17	3.40	13.96	3.44	13.77	3.47
2000	2000	2000	2500	2500	11000	110%	-15	6.70	2.40	6.49	2.44	6.31	2.47	6.22	2.48	6.14	2.50	6.00	2.52	5.89	2.54
							-10	8.03	2.53	7.81	2.56	7.61	2.60	7.52	2.61	7.43	2.63	7.28	2.65	7.15	2.68
							-5	9.36	2.65	9.12	2.69	8.91	2.73	8.82	2.74	8.72	2.76	8.56	2.79	8.42	2.81
							0	10.69	2.78	10.44	2.82	10.22	2.85	10.12	2.87	10.02	2.89	9.84	2.92	9.69	2.94
							2	11.22	2.82	10.97	2.87	10.74	2.90	10.64	2.92	10.54	2.94	10.36	2.97	10.20	3.00
							7	12.29	2.92	12.03	2.97	11.79	3.01	11.71	3.02	11.57	3.04	11.38	3.07	11.22	3.10
							10	13.36	3.02	13.08	3.06	12.84	3.11	12.72	3.13	12.61	3.14	12.41	3.18	12.24	3.21
							15	14.69	3.14	14.41	3.19	14.15	3.23	14.03	3.25	13.91	3.27	13.70	3.31	13.51	3.34
2000	2000	2000	2500	3500	12000	120%	-15	6.80	2.37	6.59	2.40	6.40	2.44	6.31	2.45	6.23	2.46	6.09	2.49	5.97	2.51
							-10	8.15	2.49	7.92	2.53	7.72	2.56	7.63	2.58	7.54	2.59	7.39	2.62	7.26	2.64
							-5	9.49	2.62	9.26	2.66	9.04	2.69	8.94	2.71	8.85	2.72	8.69	2.75	8.54	2.77
							0	10.84	2.74	10.59	2.78	10.37	2.82	10.26	2.83	10.16	2.85	9.99	2.88	9.83	2.90
							2	11.38	2.79	11.13	2.83	10.90	2.87	10.79	2.88	10.69	2.90	10.51	2.93	10.35	2.96
							7	12.47	2.88	12.20	2.93	11.96	2.97	11.88	2.98	11.74	3.00	11.55	3.03	11.38	3.06
							10	13.55	2.98	13.27	3.02	13.02	3.07	12.91	3.08	12.80	3.10	12.59	3.14	12.41	3.17
							15	14.91	3.10	14.62	3.15	14.36	3.19	14.23	3.21	14.12	3.23	13.90	3.26	13.71	3.29
2000	2000	2000	2500	5000	13500	135%	-15	6.74	2.45	6.53	2.48	6.34	2.52	6.26	2.53	6.18	2.55	6.04	2.57	5.92	2.59
							-10	8.08	2.58	7.85	2.62	7.65	2.65	7.56	2.67	7.48	2.68	7.33	2.71	7.20	2.73
							-5	9.41	2.70	9.18	2.74	8.97	2.78	8.87	2.80	8.78	2.81	8.61	2.84	8.47	2.87
							0	10.75	2.83	10.50	2.87	10.28	2.91	10.18	2.93	10.08	2.95	9.90	2.98	9.75	3.00
							2	11.29	2.88	11.04	2.92	10.81	2.96	10.70	2.98	10.60	3.00	10.42	3.03	10.26	3.06
							7	12.36	2.98	12.10	3.02	11.86	3.07	11.78	3.08	11.64	3.10	11.45	3.14	11.28	3.16
							10	13.44	3.08	13.16	3.13	12.91	3.17	12.80	3.19	12.69	3.21	12.49	3.24	12.31	3.27
							15	14.78	3.20	14.50	3.25	14.23	3.30	14.11	3.32	14.00	3.34	13.78	3.37	13.59	3.40

12. Capacity Table

12-5. AJ100TXJ5KH/EA

HEATING

Combination (Capacity Index)					Combination (Total)	Combination (%)	Outdoor Temperature (°C,DB)	Indoor Temperature (°C, DB)													
								14		16		18		20		21		22		24	
								TC(kW)	PI(kW)	TC(kW)	PI(kW)	TC(kW)	PI(kW)	TC(kW)	PI(kW)	TC(kW)	PI(kW)	TC(kW)	PI(kW)	TC(kW)	PI(kW)
2000	2000	2000	2500	6800	15300	153%	-15	6.87	2.54	6.65	2.57	6.46	2.61	6.38	2.62	6.30	2.64	6.15	2.66	6.04	2.68
							-10	8.23	2.67	8.00	2.71	7.80	2.74	7.70	2.76	7.62	2.78	7.46	2.80	7.33	2.83
							-5	9.59	2.80	9.35	2.84	9.13	2.88	9.03	2.90	8.94	2.91	8.77	2.94	8.63	2.97
							0	10.95	2.93	10.70	2.97	10.47	3.01	10.37	3.03	10.27	3.05	10.09	3.08	9.93	3.11
							2	11.50	2.98	11.24	3.03	11.01	3.07	10.90	3.09	10.80	3.10	10.61	3.14	10.45	3.17
							7	12.59	3.09	12.32	3.13	12.08	3.18	12.00	3.19	11.86	3.21	11.67	3.25	11.49	3.28
							10	13.69	3.19	13.41	3.24	13.15	3.28	13.04	3.30	12.93	3.32	12.72	3.36	12.54	3.39
							15	15.06	3.32	14.77	3.37	14.50	3.41	14.38	3.43	14.26	3.45	14.04	3.49	13.85	3.53
2000	2000	2000	3500	3500	13000	130%	-15	6.57	2.41	6.36	2.44	6.18	2.48	6.09	2.49	6.02	2.50	5.88	2.53	5.77	2.55
							-10	7.87	2.53	7.65	2.57	7.45	2.61	7.36	2.62	7.28	2.64	7.13	2.66	7.01	2.68
							-5	9.17	2.66	8.94	2.70	8.73	2.74	8.63	2.75	8.55	2.77	8.39	2.80	8.25	2.82
							0	10.47	2.78	10.23	2.83	10.01	2.86	9.91	2.88	9.81	2.90	9.64	2.93	9.49	2.95
							2	10.99	2.83	10.74	2.88	10.52	2.91	10.42	2.93	10.32	2.95	10.14	2.98	9.99	3.01
							7	12.04	2.93	11.78	2.98	11.55	3.02	11.47	3.03	11.34	3.05	11.15	3.08	10.99	3.11
							10	13.08	3.03	12.82	3.08	12.57	3.12	12.46	3.14	12.35	3.15	12.16	3.19	11.99	3.22
							15	14.39	3.15	14.11	3.20	13.86	3.24	13.74	3.26	13.63	3.28	13.42	3.32	13.23	3.35
2000	2000	2000	3500	5000	14500	145%	-15	6.84	2.49	6.62	2.53	6.43	2.56	6.34	2.57	6.26	2.59	6.12	2.61	6.00	2.63
							-10	8.19	2.62	7.96	2.66	7.76	2.69	7.67	2.71	7.58	2.72	7.42	2.75	7.29	2.77
							-5	9.54	2.75	9.30	2.79	9.09	2.83	8.99	2.84	8.90	2.86	8.73	2.89	8.59	2.91
							0	10.90	2.88	10.65	2.92	10.42	2.96	10.31	2.98	10.22	2.99	10.04	3.02	9.88	3.05
							2	11.44	2.93	11.19	2.97	10.95	3.01	10.84	3.03	10.74	3.05	10.56	3.08	10.40	3.11
							7	12.53	3.03	12.26	3.07	12.02	3.12	11.94	3.13	11.80	3.15	11.61	3.19	11.44	3.22
							10	13.62	3.13	13.34	3.18	13.09	3.22	12.97	3.24	12.86	3.26	12.66	3.29	12.48	3.32
							15	14.98	3.26	14.69	3.30	14.43	3.35	14.30	3.37	14.19	3.39	13.97	3.43	13.78	3.46
2000	2000	2000	3500	6800	16300	163%	-15	6.87	2.58	6.65	2.61	6.46	2.65	6.38	2.66	6.30	2.68	6.15	2.70	6.04	2.73
							-10	8.23	2.71	8.00	2.75	7.80	2.79	7.70	2.80	7.62	2.82	7.46	2.85	7.33	2.87
							-5	9.59	2.84	9.35	2.89	9.13	2.92	9.03	2.94	8.94	2.96	8.77	2.99	8.63	3.02
							0	10.95	2.98	10.70	3.02	10.47	3.06	10.37	3.08	10.27	3.10	10.09	3.13	9.93	3.16
							2	11.50	3.03	11.24	3.08	11.01	3.12	10.90	3.14	10.80	3.15	10.61	3.19	10.45	3.22
							7	12.59	3.14	12.32	3.18	12.08	3.22	12.00	3.24	11.86	3.26	11.67	3.30	11.49	3.33
							10	13.69	3.24	13.41	3.29	13.15	3.33	13.04	3.35	12.93	3.37	12.72	3.41	12.54	3.44
							15	15.06	3.37	14.77	3.42	14.50	3.47	14.38	3.49	14.26	3.51	14.04	3.55	13.85	3.58
2000	2000	2000	5000	5000	16000	160%	-15	6.87	2.57	6.65	2.61	6.46	2.64	6.38	2.66	6.30	2.67	6.15	2.70	6.04	2.72
							-10	8.23	2.70	8.00	2.74	7.80	2.78	7.70	2.79	7.62	2.81	7.46	2.84	7.33	2.86
							-5	9.59	2.84	9.35	2.88	9.13	2.92	9.03	2.93	8.94	2.95	8.77	2.98	8.63	3.01
							0	10.95	2.97	10.70	3.01	10.47	3.05	10.37	3.07	10.27	3.09	10.09	3.12	9.93	3.15
							2	11.50	3.02	11.24	3.07	11.01	3.11	10.90	3.13	10.80	3.14	10.61	3.18	10.45	3.21
							7	12.59	3.13	12.32	3.17	12.08	3.21	12.00	3.23	11.86	3.25	11.67	3.29	11.49	3.32
							10	13.69	3.23	13.41	3.28	13.15	3.32	13.04	3.34	12.93	3.36	12.72	3.40	12.54	3.43
							15	15.06	3.36	14.77	3.41	14.50	3.46	14.38	3.48	14.26	3.50	14.04	3.54	13.85	3.57
2000	2000	2500	2500	2500	11500	115%	-15	6.85	2.40	6.63	2.44	6.44	2.47	6.36	2.48	6.27	2.50	6.13	2.52	6.01	2.54
							-10	8.20	2.53	7.97	2.56	7.77	2.60	7.68	2.61	7.59	2.63	7.44	2.65	7.31	2.68
							-5	9.56	2.65	9.32	2.69	9.10	2.73	9.00	2.74	8.91	2.76	8.74	2.79	8.60	2.81
							0	10.92	2.78	10.66	2.82	10.44	2.85	10.33	2.87	10.23	2.89	10.05	2.92	9.90	2.94
							2	11.46	2.82	11.20	2.87	10.97	2.90	10.86	2.92	10.76	2.94	10.58	2.97	10.42	3.00
							7	12.55	2.92	12.28	2.97	12.04	3.01	11.96	3.02	11.82	3.04	11.63	3.07	11.46	3.10
							10	13.64	3.02	13.36	3.06	13.11	3.11	12.99	3.13	12.88	3.14	12.68	3.18	12.50	3.21
							15	15.01	3.14	14.72	3.19	14.45	3.23	14.33	3.25	14.21	3.27	13.99	3.31	13.80	3.34

12. Capacity Table

12-5. AJ100TXJ5KH/EA

HEATING

Combination (Capacity Index)					Combination (Total)	Combination (%)	Outdoor Temperature (°C,DB)	Indoor Temperature (°C, DB)													
								14		16		18		20		21		22		24	
								TC(kW)	PI(kW)	TC(kW)	PI(kW)	TC(kW)	PI(kW)	TC(kW)	PI(kW)	TC(kW)	PI(kW)	TC(kW)	PI(kW)	TC(kW)	PI(kW)
2000	2000	2500	2500	3500	12500	125%	-15	6.61	2.44	6.40	2.48	6.22	2.51	6.13	2.52	6.05	2.54	5.92	2.56	5.80	2.58
							-10	7.91	2.57	7.69	2.61	7.50	2.64	7.41	2.66	7.33	2.67	7.18	2.70	7.05	2.72
							-5	9.22	2.70	8.99	2.74	8.78	2.77	8.69	2.79	8.60	2.80	8.44	2.83	8.30	2.86
							0	10.53	2.82	10.29	2.86	10.07	2.90	9.97	2.92	9.87	2.94	9.70	2.97	9.55	2.99
							2	11.06	2.87	10.81	2.91	10.59	2.95	10.48	2.97	10.38	2.99	10.21	3.02	10.05	3.05
							7	12.11	2.97	11.85	3.02	11.62	3.06	11.54	3.07	11.41	3.09	11.22	3.13	11.05	3.15
							10	13.16	3.07	12.89	3.12	12.65	3.16	12.54	3.18	12.43	3.20	12.23	3.23	12.06	3.26
							15	14.48	3.19	14.20	3.24	13.94	3.28	13.82	3.31	13.71	3.32	13.50	3.36	13.32	3.39
2000	2000	2500	2500	5000	14000	140%	-15	6.87	2.52	6.65	2.56	6.46	2.59	6.38	2.61	6.30	2.62	6.15	2.65	6.04	2.67
							-10	8.23	2.65	8.00	2.69	7.80	2.73	7.70	2.74	7.62	2.76	7.46	2.79	7.33	2.81
							-5	9.59	2.78	9.35	2.82	9.13	2.86	9.03	2.88	8.94	2.90	8.77	2.92	8.63	2.95
							0	10.95	2.91	10.70	2.96	10.47	3.00	10.37	3.01	10.27	3.03	10.09	3.06	9.93	3.09
							2	11.50	2.96	11.24	3.01	11.01	3.05	10.90	3.07	10.80	3.09	10.61	3.12	10.45	3.15
							7	12.59	3.07	12.32	3.11	12.08	3.16	12.00	3.17	11.86	3.19	11.67	3.23	11.49	3.26
							10	13.69	3.17	13.41	3.22	13.15	3.26	13.04	3.28	12.93	3.30	12.72	3.34	12.54	3.37
							15	15.06	3.30	14.77	3.35	14.50	3.39	14.38	3.41	14.26	3.43	14.04	3.47	13.85	3.50
2000	2000	2500	2500	6800	15800	158%	-15	6.87	2.61	6.65	2.65	6.46	2.68	6.38	2.70	6.30	2.71	6.15	2.74	6.04	2.76
							-10	8.23	2.74	8.00	2.78	7.80	2.82	7.70	2.84	7.62	2.85	7.46	2.88	7.33	2.91
							-5	9.59	2.88	9.35	2.92	9.13	2.96	9.03	2.98	8.94	3.00	8.77	3.03	8.63	3.05
							0	10.95	3.01	10.70	3.06	10.47	3.10	10.37	3.12	10.27	3.14	10.09	3.17	9.93	3.20
							2	11.50	3.07	11.24	3.11	11.01	3.15	10.90	3.17	10.80	3.19	10.61	3.23	10.45	3.25
							7	12.59	3.17	12.32	3.22	12.08	3.26	12.00	3.28	11.86	3.30	11.67	3.34	11.49	3.37
							10	13.69	3.28	13.41	3.33	13.15	3.37	13.04	3.39	12.93	3.41	12.72	3.45	12.54	3.48
							15	15.06	3.41	14.77	3.46	14.50	3.51	14.38	3.53	14.26	3.55	14.04	3.59	13.85	3.63
2000	2000	2500	3500	3500	13500	135%	-15	6.72	2.44	6.50	2.48	6.32	2.51	6.23	2.52	6.15	2.54	6.01	2.56	5.90	2.58
							-10	8.04	2.57	7.82	2.61	7.62	2.64	7.53	2.66	7.45	2.67	7.29	2.70	7.17	2.72
							-5	9.37	2.70	9.14	2.74	8.93	2.77	8.83	2.79	8.74	2.80	8.58	2.83	8.44	2.86
							0	10.71	2.82	10.46	2.86	10.24	2.90	10.13	2.92	10.04	2.94	9.86	2.97	9.71	2.99
							2	11.24	2.87	10.99	2.91	10.76	2.95	10.65	2.97	10.55	2.99	10.37	3.02	10.22	3.05
							7	12.31	2.97	12.05	3.02	11.81	3.06	11.73	3.07	11.59	3.09	11.40	3.13	11.24	3.15
							10	13.38	3.07	13.11	3.12	12.86	3.16	12.74	3.18	12.63	3.20	12.43	3.23	12.26	3.26
							15	14.72	3.19	14.43	3.24	14.17	3.28	14.05	3.31	13.94	3.32	13.72	3.36	13.53	3.39
2000	2000	2500	3500	5000	15000	150%	-15	6.87	2.52	6.65	2.56	6.46	2.59	6.38	2.61	6.30	2.62	6.15	2.65	6.04	2.67
							-10	8.23	2.65	8.00	2.69	7.80	2.73	7.70	2.74	7.62	2.76	7.46	2.79	7.33	2.81
							-5	9.59	2.78	9.35	2.82	9.13	2.86	9.03	2.88	8.94	2.90	8.77	2.92	8.63	2.95
							0	10.95	2.91	10.70	2.96	10.47	3.00	10.37	3.01	10.27	3.03	10.09	3.06	9.93	3.09
							2	11.50	2.96	11.24	3.01	11.01	3.05	10.90	3.07	10.80	3.09	10.61	3.12	10.45	3.15
							7	12.59	3.07	12.32	3.11	12.08	3.16	12.00	3.17	11.86	3.19	11.67	3.23	11.49	3.26
							10	13.69	3.17	13.41	3.22	13.15	3.26	13.04	3.28	12.93	3.30	12.72	3.34	12.54	3.37
							15	15.06	3.30	14.77	3.35	14.50	3.39	14.38	3.41	14.26	3.43	14.04	3.47	13.85	3.50
2000	2000	2500	3500	6800	16800	168%	-15	6.87	2.61	6.65	2.65	6.46	2.68	6.38	2.70	6.30	2.71	6.15	2.74	6.04	2.76
							-10	8.23	2.74	8.00	2.78	7.80	2.82	7.70	2.84	7.62	2.85	7.46	2.88	7.33	2.91
							-5	9.59	2.88	9.35	2.92	9.13	2.96	9.03	2.98	8.94	3.00	8.77	3.03	8.63	3.05
							0	10.95	3.01	10.70	3.06	10.47	3.10	10.37	3.12	10.27	3.14	10.09	3.17	9.93	3.20
							2	11.50	3.07	11.24	3.11	11.01	3.15	10.90	3.17	10.80	3.19	10.61	3.23	10.45	3.25
							7	12.59	3.17	12.32	3.22	12.08	3.26	12.00	3.28	11.86	3.30	11.67	3.34	11.49	3.37
							10	13.69	3.28	13.41	3.33	13.15	3.37	13.04	3.39	12.93	3.41	12.72	3.45	12.54	3.48
							15	15.06	3.41	14.77	3.46	14.50	3.51	14.38	3.53	14.26	3.55	14.04	3.59	13.85	3.63

12. Capacity Table

12-5. AJ100TXJ5KH/EA

HEATING

Combination (Capacity Index)					Combination (Total)	Combination (%)	Outdoor Temperature (°C,DB)	Indoor Temperature (°C, DB)													
								14		16		18		20		21		22		24	
								TC(kW)	PI(kW)	TC(kW)	PI(kW)	TC(kW)	PI(kW)	TC(kW)	PI(kW)	TC(kW)	PI(kW)	TC(kW)	PI(kW)	TC(kW)	PI(kW)
2000	2000	2500	5000	5000	16500	165%	-15	6.87	2.61	6.65	2.65	6.46	2.68	6.38	2.70	6.30	2.71	6.15	2.74	6.04	2.76
							-10	8.23	2.74	8.00	2.78	7.80	2.82	7.70	2.84	7.62	2.85	7.46	2.88	7.33	2.91
							-5	9.59	2.88	9.35	2.92	9.13	2.96	9.03	2.98	8.94	3.00	8.77	3.03	8.63	3.05
							0	10.95	3.01	10.70	3.06	10.47	3.10	10.37	3.12	10.27	3.14	10.09	3.17	9.93	3.20
							2	11.50	3.07	11.24	3.11	11.01	3.15	10.90	3.17	10.80	3.19	10.61	3.23	10.45	3.25
							7	12.59	3.17	12.32	3.22	12.08	3.26	12.00	3.28	11.86	3.30	11.67	3.34	11.49	3.37
							10	13.69	3.28	13.41	3.33	13.15	3.37	13.04	3.39	12.93	3.41	12.72	3.45	12.54	3.48
							15	15.06	3.41	14.77	3.46	14.50	3.51	14.38	3.53	14.26	3.55	14.04	3.59	13.85	3.63
2000	2000	3500	3500	3500	14500	145%	-15	6.81	2.48	6.60	2.52	6.41	2.55	6.32	2.56	6.24	2.58	6.10	2.60	5.98	2.62
							-10	8.16	2.61	7.93	2.65	7.73	2.68	7.64	2.70	7.55	2.71	7.40	2.74	7.27	2.76
							-5	9.51	2.74	9.27	2.78	9.06	2.82	8.96	2.83	8.87	2.85	8.70	2.88	8.56	2.90
							0	10.86	2.87	10.61	2.91	10.38	2.95	10.28	2.97	10.18	2.98	10.00	3.01	9.85	3.04
							2	11.40	2.92	11.15	2.96	10.92	3.00	10.81	3.02	10.71	3.04	10.52	3.07	10.36	3.10
							7	12.49	3.02	12.22	3.06	11.98	3.11	11.90	3.12	11.76	3.14	11.57	3.18	11.40	3.21
							10	13.57	3.12	13.30	3.17	13.05	3.21	12.93	3.23	12.82	3.25	12.61	3.28	12.43	3.31
							15	14.93	3.24	14.64	3.29	14.38	3.34	14.26	3.36	14.14	3.38	13.92	3.42	13.73	3.45
2000	2000	3500	3500	5000	16000	160%	-15	6.87	2.56	6.65	2.60	6.46	2.63	6.38	2.65	6.30	2.66	6.15	2.69	6.04	2.71
							-10	8.23	2.69	8.00	2.73	7.80	2.77	7.70	2.79	7.62	2.80	7.46	2.83	7.33	2.85
							-5	9.59	2.83	9.35	2.87	9.13	2.91	9.03	2.92	8.94	2.94	8.77	2.97	8.63	3.00
							0	10.95	2.96	10.70	3.00	10.47	3.04	10.37	3.06	10.27	3.08	10.09	3.11	9.93	3.14
							2	11.50	3.01	11.24	3.06	11.01	3.10	10.90	3.12	10.80	3.13	10.61	3.17	10.45	3.20
							7	12.59	3.12	12.32	3.16	12.08	3.20	12.00	3.22	11.86	3.24	11.67	3.28	11.49	3.31
							10	13.69	3.22	13.41	3.27	13.15	3.31	13.04	3.33	12.93	3.35	12.72	3.39	12.54	3.42
							15	15.06	3.35	14.77	3.40	14.50	3.45	14.38	3.47	14.26	3.49	14.04	3.53	13.85	3.56
2000	2500	2500	2500	2500	12000	120%	-15	6.68	2.43	6.47	2.47	6.29	2.50	6.20	2.52	6.12	2.53	5.98	2.55	5.87	2.57
							-10	8.00	2.56	7.78	2.60	7.58	2.63	7.49	2.65	7.41	2.66	7.26	2.69	7.13	2.71
							-5	9.33	2.69	9.09	2.73	8.88	2.76	8.79	2.78	8.69	2.79	8.53	2.82	8.39	2.85
							0	10.65	2.81	10.41	2.85	10.18	2.89	10.08	2.91	9.98	2.93	9.81	2.96	9.66	2.98
							2	11.18	2.86	10.93	2.90	10.70	2.94	10.60	2.96	10.50	2.98	10.32	3.01	10.16	3.04
							7	12.25	2.96	11.99	3.01	11.75	3.05	11.67	3.06	11.53	3.08	11.34	3.11	11.18	3.14
							10	13.31	3.06	13.04	3.11	12.79	3.15	12.68	3.17	12.57	3.19	12.37	3.22	12.19	3.25
							15	14.64	3.18	14.36	3.23	14.10	3.27	13.98	3.29	13.87	3.31	13.65	3.35	13.47	3.38
2000	2500	2500	2500	3500	13000	130%	-15	6.77	2.47	6.55	2.51	6.37	2.54	6.28	2.56	6.20	2.57	6.06	2.60	5.94	2.62
							-10	8.11	2.60	7.88	2.64	7.68	2.68	7.59	2.69	7.50	2.71	7.35	2.73	7.22	2.76
							-5	9.45	2.73	9.21	2.77	9.00	2.81	8.90	2.82	8.81	2.84	8.64	2.87	8.50	2.89
							0	10.79	2.86	10.54	2.90	10.31	2.94	10.21	2.96	10.11	2.97	9.94	3.00	9.78	3.03
							2	11.33	2.91	11.07	2.95	10.84	2.99	10.74	3.01	10.64	3.03	10.45	3.06	10.29	3.09
							7	12.40	3.01	12.14	3.05	11.90	3.10	11.82	3.11	11.68	3.13	11.49	3.17	11.32	3.20
							10	13.48	3.11	13.21	3.16	12.96	3.20	12.84	3.22	12.73	3.24	12.53	3.27	12.35	3.30
							15	14.83	3.23	14.55	3.28	14.28	3.33	14.16	3.35	14.04	3.37	13.83	3.41	13.64	3.44
2000	2500	2500	2500	5000	14500	145%	-15	6.87	2.55	6.65	2.59	6.46	2.62	6.38	2.64	6.30	2.65	6.15	2.68	6.04	2.70
							-10	8.23	2.69	8.00	2.73	7.80	2.76	7.70	2.78	7.62	2.79	7.46	2.82	7.33	2.84
							-5	9.59	2.82	9.35	2.86	9.13	2.90	9.03	2.92	8.94	2.93	8.77	2.96	8.63	2.99
							0	10.95	2.95	10.70	2.99	10.47	3.03	10.37	3.05	10.27	3.07	10.09	3.10	9.93	3.13
							2	11.50	3.00	11.24	3.05	11.01	3.09	10.90	3.11	10.80	3.12	10.61	3.16	10.45	3.19
							7	12.59	3.11	12.32	3.15	12.08	3.19	12.00	3.21	11.86	3.23	11.67	3.27	11.49	3.30
							10	13.69	3.21	13.41	3.26	13.15	3.30	13.04	3.32	12.93	3.34	12.72	3.38	12.54	3.41
							15	15.06	3.34	14.77	3.39	14.50	3.43	14.38	3.46	14.26	3.48	14.04	3.51	13.85	3.55

12. Capacity Table

12-5. AJ100TXJ5KH/EA

HEATING

Combination (Capacity Index)					Combination (Total)	Combination (%)	Outdoor Temperature (°C,DB)	Indoor Temperature (°C, DB)													
								14		16		18		20		21		22		24	
								TC(kW)	PI(kW)	TC(kW)	PI(kW)	TC(kW)	PI(kW)	TC(kW)	PI(kW)	TC(kW)	PI(kW)	TC(kW)	PI(kW)	TC(kW)	PI(kW)
2000	2500	2500	2500	6800	16300	163%	-15	6.87	2.64	6.65	2.68	6.46	2.71	6.38	2.73	6.30	2.74	6.15	2.77	6.04	2.79
							-10	8.23	2.78	8.00	2.82	7.80	2.86	7.70	2.87	7.62	2.89	7.46	2.92	7.33	2.94
							-5	9.59	2.91	9.35	2.96	9.13	3.00	9.03	3.02	8.94	3.03	8.77	3.06	8.63	3.09
							0	10.95	3.05	10.70	3.10	10.47	3.14	10.37	3.16	10.27	3.17	10.09	3.21	9.93	3.24
							2	11.50	3.10	11.24	3.15	11.01	3.19	10.90	3.21	10.80	3.23	10.61	3.27	10.45	3.29
							7	12.59	3.21	12.32	3.26	12.08	3.30	12.00	3.32	11.86	3.34	11.67	3.38	11.49	3.41
							10	13.69	3.32	13.41	3.37	13.15	3.41	13.04	3.44	12.93	3.46	12.72	3.49	12.54	3.53
							15	15.06	3.45	14.77	3.50	14.50	3.55	14.38	3.57	14.26	3.60	14.04	3.64	13.85	3.67
2000	2500	2500	3500	3500	14000	140%	-15	6.87	2.51	6.65	2.55	6.46	2.58	6.38	2.60	6.30	2.61	6.15	2.64	6.04	2.66
							-10	8.23	2.64	8.00	2.68	7.80	2.72	7.70	2.73	7.62	2.75	7.46	2.78	7.33	2.80
							-5	9.59	2.77	9.35	2.82	9.13	2.85	9.03	2.87	8.94	2.89	8.77	2.92	8.63	2.94
							0	10.95	2.90	10.70	2.95	10.47	2.99	10.37	3.00	10.27	3.02	10.09	3.05	9.93	3.08
							2	11.50	2.96	11.24	3.00	11.01	3.04	10.90	3.06	10.80	3.08	10.61	3.11	10.45	3.14
							7	12.59	3.06	12.32	3.10	12.08	3.15	12.00	3.16	11.86	3.18	11.67	3.22	11.49	3.25
							10	13.69	3.16	13.41	3.21	13.15	3.25	13.04	3.27	12.93	3.29	12.72	3.33	12.54	3.36
							15	15.06	3.29	14.77	3.34	14.50	3.38	14.38	3.40	14.26	3.42	14.04	3.46	13.85	3.49
2000	2500	2500	3500	5000	15500	155%	-15	6.87	2.59	6.65	2.63	6.46	2.66	6.38	2.68	6.30	2.69	6.15	2.72	6.04	2.74
							-10	8.23	2.73	8.00	2.77	7.80	2.80	7.70	2.82	7.62	2.84	7.46	2.86	7.33	2.89
							-5	9.59	2.86	9.35	2.90	9.13	2.94	9.03	2.96	8.94	2.98	8.77	3.01	8.63	3.03
							0	10.95	3.00	10.70	3.04	10.47	3.08	10.37	3.10	10.27	3.12	10.09	3.15	9.93	3.18
							2	11.50	3.05	11.24	3.09	11.01	3.14	10.90	3.15	10.80	3.17	10.61	3.21	10.45	3.24
							7	12.59	3.15	12.32	3.20	12.08	3.24	12.00	3.26	11.86	3.28	11.67	3.32	11.49	3.35
							10	13.69	3.26	13.41	3.31	13.15	3.35	13.04	3.37	12.93	3.39	12.72	3.43	12.54	3.46
							15	15.06	3.39	14.77	3.44	14.50	3.49	14.38	3.51	14.26	3.53	14.04	3.57	13.85	3.60
2000	2500	2500	3500	6800	17300	173%	-15	6.87	2.68	6.65	2.72	6.46	2.75	6.38	2.77	6.30	2.79	6.15	2.81	6.04	2.84
							-10	8.23	2.82	8.00	2.86	7.80	2.90	7.70	2.92	7.62	2.93	7.46	2.96	7.33	2.99
							-5	9.59	2.96	9.35	3.00	9.13	3.04	9.03	3.06	8.94	3.08	8.77	3.11	8.63	3.14
							0	10.95	3.10	10.70	3.14	10.47	3.18	10.37	3.20	10.27	3.22	10.09	3.26	9.93	3.28
							2	11.50	3.15	11.24	3.20	11.01	3.24	10.90	3.26	10.80	3.28	10.61	3.31	10.45	3.34
							7	12.59	3.26	12.32	3.31	12.08	3.35	12.00	3.37	11.86	3.39	11.67	3.43	11.49	3.46
							10	13.69	3.37	13.41	3.42	13.15	3.47	13.04	3.49	12.93	3.51	12.72	3.55	12.54	3.58
							15	15.06	3.50	14.77	3.56	14.50	3.61	14.38	3.63	14.26	3.65	14.04	3.69	13.85	3.73
2000	2500	2500	5000	5000	17000	170%	-15	6.87	2.68	6.65	2.72	6.46	2.75	6.38	2.77	6.30	2.79	6.15	2.81	6.04	2.84
							-10	8.23	2.82	8.00	2.86	7.80	2.90	7.70	2.92	7.62	2.93	7.46	2.96	7.33	2.99
							-5	9.59	2.96	9.35	3.00	9.13	3.04	9.03	3.06	8.94	3.08	8.77	3.11	8.63	3.14
							0	10.95	3.10	10.70	3.14	10.47	3.18	10.37	3.20	10.27	3.22	10.09	3.26	9.93	3.28
							2	11.50	3.15	11.24	3.20	11.01	3.24	10.90	3.26	10.80	3.28	10.61	3.31	10.45	3.34
							7	12.59	3.26	12.32	3.31	12.08	3.35	12.00	3.37	11.86	3.39	11.67	3.43	11.49	3.46
							10	13.69	3.37	13.41	3.42	13.15	3.47	13.04	3.49	12.93	3.51	12.72	3.55	12.54	3.58
							15	15.06	3.50	14.77	3.56	14.50	3.61	14.38	3.63	14.26	3.65	14.04	3.69	13.85	3.73
2000	2500	3500	3500	3500	15000	150%	-15	6.87	2.51	6.65	2.55	6.46	2.58	6.38	2.60	6.30	2.61	6.15	2.64	6.04	2.66
							-10	8.23	2.64	8.00	2.68	7.80	2.72	7.70	2.73	7.62	2.75	7.46	2.78	7.33	2.80
							-5	9.59	2.77	9.35	2.82	9.13	2.85	9.03	2.87	8.94	2.89	8.77	2.92	8.63	2.94
							0	10.95	2.90	10.70	2.95	10.47	2.99	10.37	3.00	10.27	3.02	10.09	3.05	9.93	3.08
							2	11.50	2.96	11.24	3.00	11.01	3.04	10.90	3.06	10.80	3.08	10.61	3.11	10.45	3.14
							7	12.59	3.06	12.32	3.10	12.08	3.15	12.00	3.16	11.86	3.18	11.67	3.22	11.49	3.25
							10	13.69	3.16	13.41	3.21	13.15	3.25	13.04	3.27	12.93	3.29	12.72	3.33	12.54	3.36
							15	15.06	3.29	14.77	3.34	14.50	3.38	14.38	3.40	14.26	3.42	14.04	3.46	13.85	3.49

12. Capacity Table

12-5. AJ100TXJ5KH/EA

HEATING

Combination (Capacity Index)					Combination (Total)	Combination (%)	Outdoor Temperature (°C,DB)	Indoor Temperature (°C, DB)													
								14		16		18		20		21		22		24	
								TC(kW)	PI(kW)	TC(kW)	PI(kW)	TC(kW)	PI(kW)	TC(kW)	PI(kW)	TC(kW)	PI(kW)	TC(kW)	PI(kW)	TC(kW)	PI(kW)
2000	2500	3500	3500	5000	16500	165%	-15	6.87	2.60	6.65	2.64	6.46	2.67	6.38	2.69	6.30	2.70	6.15	2.73	6.04	2.75
							-10	8.23	2.74	8.00	2.78	7.80	2.81	7.70	2.83	7.62	2.85	7.46	2.87	7.33	2.90
							-5	9.59	2.87	9.35	2.91	9.13	2.95	9.03	2.97	8.94	2.99	8.77	3.02	8.63	3.04
							0	10.95	3.00	10.70	3.05	10.47	3.09	10.37	3.11	10.27	3.13	10.09	3.16	9.93	3.19
							2	11.50	3.06	11.24	3.10	11.01	3.15	10.90	3.16	10.80	3.18	10.61	3.22	10.45	3.24
							7	12.59	3.16	12.32	3.21	12.08	3.25	12.00	3.27	11.86	3.29	11.67	3.33	11.49	3.36
							10	13.69	3.27	13.41	3.32	13.15	3.36	13.04	3.38	12.93	3.40	12.72	3.44	12.54	3.47
							15	15.06	3.40	14.77	3.45	14.50	3.50	14.38	3.52	14.26	3.54	14.04	3.58	13.85	3.61
2000	3500	3500	3500	3500	16000	160%	-15	6.87	2.55	6.65	2.59	6.46	2.62	6.38	2.64	6.30	2.65	6.15	2.68	6.04	2.70
							-10	8.23	2.69	8.00	2.73	7.80	2.76	7.70	2.78	7.62	2.79	7.46	2.82	7.33	2.84
							-5	9.59	2.82	9.35	2.86	9.13	2.90	9.03	2.92	8.94	2.93	8.77	2.96	8.63	2.99
							0	10.95	2.95	10.70	2.99	10.47	3.03	10.37	3.05	10.27	3.07	10.09	3.10	9.93	3.13
							2	11.50	3.00	11.24	3.05	11.01	3.09	10.90	3.11	10.80	3.12	10.61	3.16	10.45	3.19
							7	12.59	3.11	12.32	3.15	12.08	3.19	12.00	3.21	11.86	3.23	11.67	3.27	11.49	3.30
							10	13.69	3.21	13.41	3.26	13.15	3.30	13.04	3.32	12.93	3.34	12.72	3.38	12.54	3.41
							15	15.06	3.34	14.77	3.39	14.50	3.43	14.38	3.46	14.26	3.48	14.04	3.51	13.85	3.55
2500	2500	2500	2500	2500	12500	125%	-15	6.87	2.33	6.65	2.36	6.46	2.39	6.38	2.41	6.30	2.42	6.15	2.45	6.04	2.46
							-10	8.23	2.45	8.00	2.49	7.80	2.52	7.70	2.54	7.62	2.55	7.46	2.57	7.33	2.60
							-5	9.59	2.57	9.35	2.61	9.13	2.65	9.03	2.66	8.94	2.68	8.77	2.70	8.63	2.73
							0	10.95	2.69	10.70	2.73	10.47	2.77	10.37	2.79	10.27	2.80	10.09	2.83	9.93	2.86
							2	11.50	2.74	11.24	2.78	11.01	2.82	10.90	2.84	10.80	2.85	10.61	2.88	10.45	2.91
							7	12.59	2.84	12.32	2.88	12.08	2.92	12.00	2.93	11.86	2.95	11.67	2.98	11.49	3.01
							10	13.69	2.93	13.41	2.97	13.15	3.01	13.04	3.03	12.93	3.05	12.72	3.08	12.54	3.11
							15	15.06	3.05	14.77	3.09	14.50	3.13	14.38	3.15	14.26	3.17	14.04	3.21	13.85	3.24
2500	2500	2500	2500	3500	13500	135%	-15	6.87	2.50	6.65	2.54	6.46	2.57	6.38	2.59	6.30	2.60	6.15	2.63	6.04	2.65
							-10	8.23	2.64	8.00	2.67	7.80	2.71	7.70	2.73	7.62	2.74	7.46	2.77	7.33	2.79
							-5	9.59	2.77	9.35	2.81	9.13	2.84	9.03	2.86	8.94	2.88	8.77	2.91	8.63	2.93
							0	10.95	2.89	10.70	2.94	10.47	2.98	10.37	2.99	10.27	3.01	10.09	3.04	9.93	3.07
							2	11.50	2.95	11.24	2.99	11.01	3.03	10.90	3.05	10.80	3.07	10.61	3.10	10.45	3.13
							7	12.59	3.05	12.32	3.09	12.08	3.14	12.00	3.15	11.86	3.17	11.67	3.21	11.49	3.24
							10	13.69	3.15	13.41	3.20	13.15	3.24	13.04	3.26	12.93	3.28	12.72	3.31	12.54	3.35
							15	15.06	3.28	14.77	3.33	14.50	3.37	14.38	3.39	14.26	3.41	14.04	3.45	13.85	3.48
2500	2500	2500	2500	5000	15000	150%	-15	6.87	2.59	6.65	2.63	6.46	2.66	6.38	2.68	6.30	2.69	6.15	2.72	6.04	2.74
							-10	8.23	2.73	8.00	2.77	7.80	2.80	7.70	2.82	7.62	2.84	7.46	2.86	7.33	2.89
							-5	9.59	2.86	9.35	2.90	9.13	2.94	9.03	2.96	8.94	2.98	8.77	3.01	8.63	3.03
							0	10.95	3.00	10.70	3.04	10.47	3.08	10.37	3.10	10.27	3.12	10.09	3.15	9.93	3.18
							2	11.50	3.05	11.24	3.09	11.01	3.14	10.90	3.15	10.80	3.17	10.61	3.21	10.45	3.24
							7	12.59	3.15	12.32	3.20	12.08	3.24	12.00	3.26	11.86	3.28	11.67	3.32	11.49	3.35
							10	13.69	3.26	13.41	3.31	13.15	3.35	13.04	3.37	12.93	3.39	12.72	3.43	12.54	3.46
							15	15.06	3.39	14.77	3.44	14.50	3.49	14.38	3.51	14.26	3.53	14.04	3.57	13.85	3.60
2500	2500	2500	2500	6800	16800	168%	-15	6.87	2.68	6.65	2.72	6.46	2.75	6.38	2.77	6.30	2.79	6.15	2.81	6.04	2.84
							-10	8.23	2.82	8.00	2.86	7.80	2.90	7.70	2.92	7.62	2.93	7.46	2.96	7.33	2.99
							-5	9.59	2.96	9.35	3.00	9.13	3.04	9.03	3.06	8.94	3.08	8.77	3.11	8.63	3.14
							0	10.95	3.10	10.70	3.14	10.47	3.18	10.37	3.20	10.27	3.22	10.09	3.26	9.93	3.28
							2	11.50	3.15	11.24	3.20	11.01	3.24	10.90	3.26	10.80	3.28	10.61	3.31	10.45	3.34
							7	12.59	3.26	12.32	3.31	12.08	3.35	12.00	3.37	11.86	3.39	11.67	3.43	11.49	3.46
							10	13.69	3.37	13.41	3.42	13.15	3.47	13.04	3.49	12.93	3.51	12.72	3.55	12.54	3.58
							15	15.06	3.50	14.77	3.56	14.50	3.61	14.38	3.63	14.26	3.65	14.04	3.69	13.85	3.73

12. Capacity Table

12-5. AJ100TXJ5KH/EA

HEATING

Combination (Capacity Index)					Combination (Total)	Combination (%)	Outdoor Temperature (°C,DB)	Indoor Temperature (°C, DB)													
								14		16		18		20		21		22		24	
								TC(kW)	PI(kW)	TC(kW)	PI(kW)	TC(kW)	PI(kW)	TC(kW)	PI(kW)	TC(kW)	PI(kW)	TC(kW)	PI(kW)	TC(kW)	PI(kW)
2500	2500	2500	3500	3500	14500	145%	-15	6.87	2.54	6.65	2.58	6.46	2.62	6.38	2.63	6.30	2.64	6.15	2.67	6.04	2.69
							-10	8.23	2.68	8.00	2.72	7.80	2.75	7.70	2.77	7.62	2.78	7.46	2.81	7.33	2.84
							-5	9.59	2.81	9.35	2.85	9.13	2.89	9.03	2.91	8.94	2.92	8.77	2.95	8.63	2.98
							0	10.95	2.94	10.70	2.98	10.47	3.02	10.37	3.04	10.27	3.06	10.09	3.09	9.93	3.12
							2	11.50	2.99	11.24	3.04	11.01	3.08	10.90	3.10	10.80	3.11	10.61	3.15	10.45	3.18
							7	12.59	3.10	12.32	3.14	12.08	3.19	12.00	3.20	11.86	3.22	11.67	3.26	11.49	3.29
							10	13.69	3.20	13.41	3.25	13.15	3.29	13.04	3.31	12.93	3.33	12.72	3.37	12.54	3.40
							15	15.06	3.33	14.77	3.38	14.50	3.42	14.38	3.45	14.26	3.47	14.04	3.50	13.85	3.54
2500	2500	2500	3500	5000	16000	160%	-15	6.87	2.63	6.65	2.67	6.46	2.71	6.38	2.72	6.30	2.74	6.15	2.76	6.04	2.78
							-10	8.23	2.77	8.00	2.81	7.80	2.85	7.70	2.86	7.62	2.88	7.46	2.91	7.33	2.93
							-5	9.59	2.91	9.35	2.95	9.13	2.99	9.03	3.01	8.94	3.02	8.77	3.05	8.63	3.08
							0	10.95	3.04	10.70	3.09	10.47	3.13	10.37	3.15	10.27	3.16	10.09	3.20	9.93	3.23
							2	11.50	3.10	11.24	3.14	11.01	3.18	10.90	3.20	10.80	3.22	10.61	3.26	10.45	3.28
							7	12.59	3.20	12.32	3.25	12.08	3.29	12.00	3.31	11.86	3.33	11.67	3.37	11.49	3.40
							10	13.69	3.31	13.41	3.36	13.15	3.40	13.04	3.43	12.93	3.45	12.72	3.48	12.54	3.52
							15	15.06	3.44	14.77	3.49	14.50	3.54	14.38	3.56	14.26	3.58	14.04	3.62	13.85	3.66
2500	2500	3500	3500	3500	15500	155%	-15	6.87	2.58	6.65	2.62	6.46	2.66	6.38	2.67	6.30	2.69	6.15	2.71	6.04	2.73
							-10	8.23	2.72	8.00	2.76	7.80	2.80	7.70	2.81	7.62	2.83	7.46	2.86	7.33	2.88
							-5	9.59	2.85	9.35	2.90	9.13	2.93	9.03	2.95	8.94	2.97	8.77	3.00	8.63	3.02
							0	10.95	2.99	10.70	3.03	10.47	3.07	10.37	3.09	10.27	3.11	10.09	3.14	9.93	3.17
							2	11.50	3.04	11.24	3.08	11.01	3.13	10.90	3.15	10.80	3.16	10.61	3.20	10.45	3.23
							7	12.59	3.14	12.32	3.19	12.08	3.23	12.00	3.25	11.86	3.27	11.67	3.31	11.49	3.34
							10	13.69	3.25	13.41	3.30	13.15	3.34	13.04	3.36	12.93	3.38	12.72	3.42	12.54	3.45
							15	15.06	3.38	14.77	3.43	14.50	3.48	14.38	3.50	14.26	3.52	14.04	3.56	13.85	3.59
2500	2500	3500	3500	5000	17000	170%	-15	6.87	2.67	6.65	2.71	6.46	2.75	6.38	2.76	6.30	2.78	6.15	2.80	6.04	2.83
							-10	8.23	2.81	8.00	2.85	7.80	2.89	7.70	2.91	7.62	2.92	7.46	2.95	7.33	2.98
							-5	9.59	2.95	9.35	2.99	9.13	3.03	9.03	3.05	8.94	3.07	8.77	3.10	8.63	3.13
							0	10.95	3.09	10.70	3.13	10.47	3.18	10.37	3.19	10.27	3.21	10.09	3.25	9.93	3.28
							2	11.50	3.14	11.24	3.19	11.01	3.23	10.90	3.25	10.80	3.27	10.61	3.30	10.45	3.33
							7	12.59	3.25	12.32	3.30	12.08	3.34	12.00	3.36	11.86	3.38	11.67	3.42	11.49	3.45
							10	13.69	3.36	13.41	3.41	13.15	3.46	13.04	3.48	12.93	3.50	12.72	3.54	12.54	3.57
							15	15.06	3.49	14.77	3.55	14.50	3.60	14.38	3.62	14.26	3.64	14.04	3.68	13.85	3.71
2500	3500	3500	3500	3500	16500	165%	-15	6.87	2.59	6.65	2.63	6.46	2.66	6.38	2.68	6.30	2.69	6.15	2.72	6.04	2.74
							-10	8.23	2.73	8.00	2.77	7.80	2.80	7.70	2.82	7.62	2.84	7.46	2.86	7.33	2.89
							-5	9.59	2.86	9.35	2.90	9.13	2.94	9.03	2.96	8.94	2.98	8.77	3.01	8.63	3.03
							0	10.95	3.00	10.70	3.04	10.47	3.08	10.37	3.10	10.27	3.12	10.09	3.15	9.93	3.18
							2	11.50	3.05	11.24	3.09	11.01	3.14	10.90	3.15	10.80	3.17	10.61	3.21	10.45	3.24
							7	12.59	3.15	12.32	3.20	12.08	3.24	12.00	3.26	11.86	3.28	11.67	3.32	11.49	3.35
							10	13.69	3.26	13.41	3.31	13.15	3.35	13.04	3.37	12.93	3.39	12.72	3.43	12.54	3.46
							15	15.06	3.39	14.77	3.44	14.50	3.49	14.38	3.51	14.26	3.53	14.04	3.57	13.85	3.60

NOTE

1 Cooling capacity is based on 27°CDB / 19°CWB (indoor temperature), 35°CDB (outdoor temperature).

2 Heating capacity is based on 20°CDB (indoor temperature), 7°CDB/6°CWB (outdoor temperature).

3 The above is the value for connecting with the following indoor units.
- AJ***TNAPKH : Premium Wind Free

4 Capacities are based on the following conditions:
- Corresponding refrigerant piping length : 5m / - Level difference : 0m

5 The total ability of connected a indoor unit is up to 17.3kW

6 It is impossible to connect the indoor unit for one room only.

7 This data is reference data for temperature capacity trend.

12. Capacity Table

12-6. AJ125TXJ5KH/EA

COOLING

Combination (Capacity Index)					Combination (Total)	Combination (%)	Outdoor Temperature (°C,DB)	Indoor Temperature (°F, WB)													
								14		16		18		19		20		22		24	
								TC(kW)	PI(kW)	TC(kW)	PI(kW)	TC(kW)	PI(kW)	TC(kW)	PI(kW)	TC(kW)	PI(kW)	TC(kW)	PI(kW)	TC(kW)	PI(kW)
2000					2000	14%	10	1.60	0.42	2.32	0.47	2.42	0.51	2.46	0.53	2.51	0.54	2.61	0.57	2.71	0.59
							12	1.60	0.44	2.28	0.49	2.38	0.53	2.43	0.54	2.48	0.56	2.57	0.58	2.67	0.60
							14	1.60	0.46	2.24	0.51	2.34	0.54	2.39	0.56	2.44	0.57	2.53	0.60	2.63	0.61
							16	1.60	0.48	2.21	0.52	2.30	0.56	2.35	0.57	2.40	0.59	2.50	0.61	2.59	0.63
							18	1.60	0.50	2.17	0.54	2.27	0.58	2.31	0.59	2.36	0.60	2.46	0.62	2.55	0.64
							20	1.60	0.52	2.13	0.56	2.23	0.59	2.28	0.61	2.32	0.62	2.42	0.64	2.52	0.65
							21	1.60	0.53	2.12	0.57	2.21	0.60	2.26	0.62	2.30	0.63	2.40	0.65	2.50	0.66
							23	1.60	0.55	2.08	0.59	2.17	0.62	2.22	0.63	2.27	0.64	2.36	0.66	2.46	0.67
							25	1.60	0.57	2.04	0.61	2.14	0.64	2.18	0.65	2.23	0.66	2.32	0.67	2.42	0.68
							27	1.60	0.59	2.01	0.63	2.10	0.66	2.15	0.67	2.19	0.68	2.29	0.69	2.38	0.70
							29	1.60	0.62	1.97	0.65	2.06	0.67	2.11	0.68	2.16	0.69	2.25	0.71	2.34	0.71
							31	1.60	0.64	1.94	0.67	2.03	0.69	2.07	0.70	2.12	0.71	2.21	0.72	2.30	0.72
							33	1.60	0.66	1.90	0.69	1.99	0.71	2.04	0.72	2.08	0.73	2.17	0.74	2.27	0.74
							35	1.60	0.68	1.86	0.71	1.95	0.73	2.00	0.73	2.04	0.75	2.14	0.75	2.23	0.75
							37	1.60	0.71	1.83	0.73	1.92	0.75	1.96	0.76	2.01	0.76	2.10	0.77	2.19	0.77
							39	1.60	0.73	1.79	0.75	1.88	0.77	1.93	0.78	1.97	0.78	2.06	0.79	2.15	0.78
							42	1.58	0.76	1.74	0.79	1.83	0.80	1.87	0.81	1.92	0.81	2.01	0.81	2.10	0.81
							44	1.50	0.79	1.71	0.81	1.79	0.82	1.84	0.83	1.88	0.83	1.97	0.83	2.06	0.82
							46	1.46	0.81	1.67	0.83	1.76	0.84	1.80	0.85	1.84	0.85	1.93	0.85	2.02	0.84
2500					2500	18%	10	2.00	0.52	2.90	0.57	3.02	0.62	3.08	0.64	3.14	0.66	3.26	0.70	3.39	0.72
							12	2.00	0.54	2.85	0.59	2.97	0.64	3.03	0.66	3.09	0.68	3.22	0.71	3.34	0.73
							14	2.00	0.56	2.80	0.62	2.93	0.66	2.99	0.68	3.05	0.70	3.17	0.73	3.29	0.75
							16	2.00	0.59	2.76	0.64	2.88	0.68	2.94	0.70	3.00	0.72	3.12	0.74	3.24	0.76
							18	2.00	0.61	2.71	0.66	2.83	0.70	2.89	0.72	2.95	0.74	3.07	0.76	3.19	0.78
							20	2.00	0.64	2.67	0.68	2.79	0.72	2.85	0.74	2.90	0.76	3.02	0.78	3.14	0.79
							21	2.00	0.65	2.64	0.70	2.76	0.73	2.82	0.75	2.88	0.76	3.00	0.79	3.12	0.80
							23	2.00	0.67	2.60	0.72	2.72	0.76	2.78	0.77	2.83	0.78	2.95	0.80	3.07	0.82
							25	2.00	0.70	2.55	0.74	2.67	0.78	2.73	0.79	2.79	0.80	2.91	0.82	3.02	0.83
							27	2.00	0.72	2.51	0.77	2.62	0.80	2.68	0.81	2.74	0.82	2.86	0.84	2.98	0.85
							29	2.00	0.75	2.46	0.79	2.58	0.82	2.64	0.83	2.69	0.85	2.81	0.86	2.93	0.87
							31	2.00	0.78	2.42	0.82	2.53	0.85	2.59	0.86	2.65	0.87	2.76	0.88	2.88	0.88
							33	2.00	0.81	2.37	0.84	2.49	0.87	2.54	0.88	2.60	0.89	2.72	0.90	2.83	0.90
							35	2.00	0.83	2.33	0.87	2.44	0.89	2.50	0.89	2.56	0.91	2.67	0.92	2.78	0.92
							37	2.00	0.86	2.29	0.89	2.40	0.92	2.45	0.93	2.51	0.93	2.62	0.94	2.74	0.94
							39	2.00	0.89	2.24	0.92	2.35	0.94	2.41	0.95	2.46	0.95	2.58	0.96	2.69	0.96
							42	1.98	0.93	2.18	0.96	2.29	0.98	2.34	0.98	2.40	0.99	2.51	0.99	2.62	0.98
							44	1.88	0.96	2.13	0.99	2.24	1.00	2.30	1.01	2.35	1.01	2.46	1.01	2.57	1.00
							46	1.83	0.99	2.09	1.01	2.20	1.03	2.25	1.03	2.30	1.04	2.41	1.03	2.53	1.02

12. Capacity Table

12-6. AJ125TXJ5KH/EA

COOLING

Combination (Capacity Index)					Combination (Total)	Combination (%)	Outdoor Temperature (°C,DB)	Indoor Temperature (°F, WB)													
								14		16		18		19		20		22		24	
								TC(kW)	PI(kW)	TC(kW)	PI(kW)	TC(kW)	PI(kW)	TC(kW)	PI(kW)	TC(kW)	PI(kW)	TC(kW)	PI(kW)	TC(kW)	PI(kW)
							10	2.80	0.67	4.06	0.75	4.23	0.81	4.31	0.84	4.40	0.87	4.57	0.91	4.74	0.94
							12	2.80	0.70	3.99	0.77	4.16	0.84	4.25	0.86	4.33	0.89	4.50	0.93	4.68	0.96
							14	2.80	0.73	3.93	0.80	4.10	0.86	4.18	0.89	4.26	0.91	4.44	0.95	4.61	0.98
							16	2.80	0.76	3.86	0.83	4.03	0.89	4.11	0.91	4.20	0.94	4.37	0.97	4.54	0.99
							18	2.80	0.80	3.80	0.86	3.96	0.92	4.05	0.94	4.13	0.96	4.30	0.99	4.47	1.01
							20	2.80	0.83	3.73	0.89	3.90	0.94	3.98	0.97	4.07	0.98	4.23	1.01	4.40	1.03
							21	2.80	0.84	3.70	0.91	3.87	0.96	3.95	0.98	4.03	1.00	4.20	1.03	4.37	1.04
							23	2.80	0.88	3.64	0.94	3.80	0.99	3.89	1.01	3.97	1.02	4.13	1.05	4.30	1.06
							25	2.80	0.91	3.58	0.97	3.74	1.01	3.82	1.03	3.90	1.05	4.07	1.07	4.23	1.08
3500					3500	25%	27	2.80	0.94	3.51	1.00	3.67	1.04	3.76	1.06	3.84	1.07	4.00	1.10	4.17	1.11
							29	2.80	0.98	3.45	1.03	3.61	1.07	3.69	1.09	3.77	1.10	3.93	1.12	4.10	1.13
							31	2.80	1.01	3.39	1.06	3.55	1.10	3.63	1.12	3.71	1.13	3.87	1.15	4.03	1.15
							33	2.80	1.05	3.32	1.10	3.48	1.13	3.56	1.15	3.64	1.16	3.80	1.17	3.97	1.17
							35	2.80	1.09	3.26	1.13	3.42	1.16	3.50	1.16	3.58	1.19	3.74	1.20	3.90	1.20
							37	2.80	1.12	3.20	1.16	3.36	1.19	3.43	1.21	3.51	1.21	3.67	1.22	3.83	1.22
							39	2.80	1.16	3.14	1.20	3.29	1.23	3.37	1.24	3.45	1.24	3.61	1.25	3.77	1.25
							42	2.77	1.21	3.05	1.25	3.20	1.27	3.28	1.28	3.35	1.29	3.51	1.29	3.67	1.28
							44	2.63	1.25	2.98	1.29	3.14	1.31	3.21	1.31	3.29	1.32	3.45	1.32	3.60	1.31
							46	2.56	1.29	2.92	1.32	3.07	1.34	3.15	1.35	3.23	1.35	3.38	1.35	3.54	1.33
							10	4.00	0.97	5.79	1.08	6.04	1.17	6.16	1.21	6.28	1.25	6.53	1.31	6.78	1.35
							12	4.00	1.01	5.70	1.12	5.94	1.21	6.07	1.24	6.19	1.28	6.43	1.34	6.68	1.38
							14	4.00	1.05	5.61	1.16	5.85	1.24	5.97	1.28	6.09	1.31	6.34	1.37	6.58	1.40
							16	4.00	1.10	5.52	1.20	5.76	1.28	5.88	1.32	6.00	1.35	6.24	1.40	6.48	1.43
							18	4.00	1.15	5.43	1.24	5.66	1.32	5.78	1.35	5.90	1.38	6.14	1.43	6.39	1.46
							20	4.00	1.19	5.34	1.28	5.57	1.36	5.69	1.39	5.81	1.42	6.05	1.46	6.29	1.49
							21	4.00	1.22	5.29	1.30	5.53	1.38	5.64	1.41	5.76	1.44	6.00	1.48	6.24	1.50
							23	4.00	1.26	5.20	1.35	5.43	1.42	5.55	1.45	5.67	1.47	5.91	1.51	6.14	1.53
							25	4.00	1.31	5.11	1.39	5.34	1.46	5.46	1.49	5.57	1.51	5.81	1.54	6.05	1.56
5000					5000	36%	27	4.00	1.36	5.02	1.44	5.25	1.50	5.37	1.53	5.48	1.55	5.72	1.58	5.95	1.59
							29	4.00	1.41	4.93	1.48	5.16	1.54	5.27	1.57	5.39	1.59	5.62	1.61	5.86	1.62
							31	4.00	1.46	4.84	1.53	5.07	1.59	5.18	1.61	5.30	1.63	5.53	1.65	5.76	1.66
							33	4.00	1.51	4.75	1.58	4.98	1.63	5.09	1.65	5.20	1.67	5.43	1.69	5.66	1.69
							35	4.00	1.56	4.66	1.63	4.89	1.67	5.00	1.67	5.11	1.71	5.34	1.72	5.57	1.72
							37	4.00	1.61	4.57	1.68	4.79	1.72	4.91	1.74	5.02	1.75	5.25	1.76	5.47	1.76
							39	4.00	1.67	4.48	1.72	4.70	1.77	4.82	1.78	4.93	1.79	5.15	1.80	5.38	1.79
							42	3.95	1.75	4.35	1.80	4.57	1.84	4.68	1.85	4.79	1.86	5.01	1.86	5.24	1.85
							44	3.75	1.80	4.26	1.85	4.48	1.88	4.59	1.89	4.70	1.90	4.92	1.90	5.14	1.88
							46	3.65	1.86	4.18	1.90	4.39	1.93	4.50	1.94	4.61	1.94	4.83	1.94	5.05	1.92

12. Capacity Table

12-6. AJ125TXJ5KH/EA

COOLING

Combination (Capacity Index)					Combination (Total)	Combination (%)	Outdoor Temperature (°C,DB)	Indoor Temperature (°F, WB)													
								14		16		18		19		20		22		24	
								TC(kW)	PI(kW)	TC(kW)	PI(kW)	TC(kW)	PI(kW)	TC(kW)	PI(kW)	TC(kW)	PI(kW)	TC(kW)	PI(kW)	TC(kW)	PI(kW)
							10	4.96	1.23	7.18	1.37	7.49	1.48	7.64	1.54	7.79	1.58	8.10	1.66	8.40	1.72
							12	4.96	1.28	7.07	1.42	7.37	1.53	7.52	1.58	7.67	1.62	7.98	1.70	8.28	1.75
							14	4.96	1.34	6.96	1.47	7.25	1.58	7.40	1.62	7.55	1.67	7.86	1.73	8.16	1.78
							16	4.96	1.40	6.84	1.52	7.14	1.63	7.29	1.67	7.44	1.71	7.74	1.77	8.04	1.82
							18	4.96	1.45	6.73	1.57	7.02	1.67	7.17	1.72	7.32	1.75	7.62	1.81	7.92	1.85
							20	4.96	1.51	6.62	1.63	6.91	1.72	7.06	1.76	7.20	1.80	7.50	1.85	7.80	1.89
							21	4.96	1.54	6.56	1.66	6.85	1.75	7.00	1.79	7.15	1.82	7.44	1.87	7.74	1.91
							23	4.96	1.60	6.45	1.71	6.74	1.80	6.88	1.84	7.03	1.87	7.32	1.92	7.62	1.94
							25	4.96	1.66	6.33	1.77	6.62	1.85	6.77	1.89	6.91	1.92	7.20	1.96	7.50	1.98
6800					6800	49%	27	4.96	1.73	6.22	1.83	6.51	1.91	6.65	1.94	6.80	1.96	7.09	2.00	7.38	2.02
							29	4.96	1.79	6.11	1.88	6.40	1.96	6.54	1.99	6.68	2.01	6.97	2.05	7.26	2.06
							31	4.96	1.85	6.00	1.94	6.28	2.01	6.42	2.04	6.57	2.06	6.85	2.09	7.14	2.10
							33	4.96	1.92	5.89	2.00	6.17	2.07	6.31	2.09	6.45	2.11	6.74	2.14	7.02	2.14
							35	4.96	1.98	5.78	2.06	6.06	2.13	6.20	2.12	6.34	2.17	6.62	2.19	6.91	2.19
							37	4.96	2.05	5.67	2.13	5.95	2.18	6.08	2.20	6.22	2.22	6.51	2.24	6.79	2.23
							39	4.96	2.12	5.56	2.19	5.83	2.24	5.97	2.26	6.11	2.27	6.39	2.28	6.67	2.28
							42	4.90	2.22	5.39	2.29	5.67	2.33	5.80	2.35	5.94	2.35	6.22	2.36	6.50	2.34
							44	4.65	2.29	5.29	2.35	5.56	2.39	5.69	2.40	5.83	2.41	6.10	2.41	6.38	2.39
							46	4.53	2.36	5.18	2.42	5.45	2.45	5.58	2.46	5.72	2.47	5.99	2.46	6.26	2.44
							10	3.62	0.80	5.11	0.82	5.21	0.84	5.27	0.85	5.33	0.86	5.48	0.88	5.66	0.90
							12	3.62	0.82	4.97	0.84	5.08	0.86	5.14	0.87	5.21	0.88	5.36	0.90	5.54	0.92
							14	3.62	0.84	4.84	0.86	4.95	0.88	5.01	0.89	5.09	0.90	5.25	0.92	5.44	0.94
							16	3.62	0.86	4.71	0.88	4.83	0.90	4.90	0.91	4.97	0.92	5.14	0.94	5.34	0.96
							18	3.62	0.88	4.59	0.90	4.71	0.92	4.79	0.93	4.87	0.94	5.04	0.96	5.25	0.98
							20	3.62	0.91	4.47	0.93	4.60	0.95	4.68	0.96	4.76	0.97	4.95	0.98	5.16	1.00
							21	3.62	0.92	4.42	0.94	4.55	0.96	4.63	0.97	4.71	0.98	4.90	0.99	5.12	1.01
							23	3.62	0.94	4.31	0.96	4.45	0.98	4.53	0.99	4.62	1.00	4.82	1.02	5.04	1.03
							25	3.62	0.97	4.21	0.99	4.36	1.01	4.44	1.01	4.53	1.02	4.73	1.04	4.96	1.06
2000	2000				4000	29%	27	3.62	0.99	4.11	1.01	4.27	1.03	4.36	1.04	4.45	1.05	4.66	1.07	4.90	1.08
							29	3.62	1.02	4.02	1.04	4.18	1.05	4.28	1.06	4.37	1.07	4.59	1.09	4.83	1.11
							31	3.62	1.04	3.94	1.06	4.11	1.08	4.20	1.09	4.30	1.10	4.53	1.12	4.78	1.13
							33	3.62	1.07	3.86	1.09	4.03	1.11	4.13	1.12	4.24	1.12	4.47	1.14	4.73	1.16
							35	3.62	1.10	3.78	1.12	3.97	1.13	4.10	1.14	4.18	1.15	4.42	1.17	4.68	1.19
							37	3.62	1.12	3.71	1.14	3.91	1.16	4.01	1.17	4.13	1.18	4.37	1.20	4.64	1.21
							39	3.62	1.15	3.65	1.17	3.85	1.19	3.96	1.20	4.08	1.21	4.33	1.22	4.61	1.24
							42	3.62	1.20	3.57	1.21	3.78	1.23	3.89	1.24	4.02	1.25	4.28	1.27	4.57	1.28
							44	3.62	1.23	3.52	1.24	3.74	1.26	3.86	1.27	3.98	1.28	4.25	1.30	4.55	1.31
							46	3.62	1.26	3.48	1.27	3.70	1.29	3.83	1.30	3.95	1.31	4.23	1.33	4.53	1.34

12. Capacity Table

12-6. AJ125TXJ5KH/EA

COOLING

Combination (Capacity Index)					Combination (Total)	Combination (%)	Outdoor Temperature (°C,DB)	Indoor Temperature (°F, WB)													
								14		16		18		19		20		22		24	
								TC(kW)	PI(kW)	TC(kW)	PI(kW)	TC(kW)	PI(kW)	TC(kW)	PI(kW)	TC(kW)	PI(kW)	TC(kW)	PI(kW)	TC(kW)	PI(kW)
2000	2500				4500	32%	10	4.14	0.88	5.85	0.90	5.96	0.92	6.02	0.93	6.10	0.94	6.27	0.96	6.47	0.98
							12	4.14	0.90	5.69	0.92	5.81	0.94	5.88	0.95	5.96	0.96	6.13	0.98	6.34	1.00
							14	4.14	0.92	5.54	0.94	5.66	0.97	5.74	0.98	5.82	0.99	6.01	1.01	6.22	1.03
							16	4.14	0.95	5.39	0.97	5.52	0.99	5.60	1.00	5.69	1.01	5.88	1.03	6.11	1.05
							18	4.14	0.97	5.25	0.99	5.39	1.01	5.48	1.02	5.57	1.03	5.77	1.05	6.00	1.07
							20	4.14	1.00	5.12	1.02	5.27	1.04	5.35	1.05	5.45	1.06	5.66	1.08	5.90	1.10
							21	4.14	1.01	5.05	1.03	5.21	1.05	5.30	1.06	5.39	1.07	5.61	1.09	5.85	1.11
							23	4.14	1.03	4.93	1.06	5.09	1.08	5.19	1.09	5.29	1.10	5.51	1.12	5.76	1.13
							25	4.14	1.06	4.81	1.08	4.98	1.10	5.08	1.11	5.19	1.12	5.42	1.14	5.68	1.16
							27	4.14	1.09	4.70	1.11	4.88	1.13	4.98	1.14	5.09	1.15	5.33	1.17	5.60	1.19
							29	4.14	1.11	4.60	1.14	4.79	1.16	4.89	1.17	5.00	1.18	5.25	1.20	5.53	1.21
							31	4.14	1.14	4.50	1.16	4.70	1.18	4.81	1.19	4.92	1.20	5.18	1.22	5.46	1.24
							33	4.14	1.17	4.41	1.19	4.61	1.21	4.73	1.22	4.85	1.23	5.11	1.25	5.41	1.27
							35	4.14	1.20	4.33	1.22	4.54	1.24	4.69	1.25	4.78	1.26	5.05	1.28	5.35	1.30
							37	4.14	1.23	4.25	1.25	4.47	1.27	4.59	1.28	4.72	1.29	5.00	1.31	5.31	1.33
							39	4.14	1.26	4.18	1.28	4.41	1.30	4.53	1.31	4.66	1.32	4.95	1.34	5.27	1.36
							42	4.14	1.31	4.08	1.33	4.32	1.35	4.46	1.36	4.59	1.37	4.89	1.39	5.22	1.41
							44	4.14	1.34	4.03	1.36	4.28	1.38	4.41	1.39	4.56	1.40	4.86	1.42	5.20	1.44
							46	4.14	1.38	3.98	1.40	4.24	1.42	4.38	1.43	4.52	1.44	4.84	1.46	5.19	1.47
2000	3500				5500	39%	10	4.92	1.03	6.94	1.05	7.08	1.08	7.15	1.09	7.24	1.10	7.44	1.12	7.68	1.15
							12	4.92	1.05	6.75	1.08	6.90	1.10	6.98	1.11	7.07	1.13	7.28	1.15	7.53	1.17
							14	4.92	1.08	6.57	1.10	6.72	1.13	6.81	1.14	6.91	1.15	7.13	1.18	7.39	1.20
							16	4.92	1.11	6.40	1.13	6.56	1.16	6.65	1.17	6.76	1.18	6.99	1.20	7.25	1.22
							18	4.92	1.13	6.23	1.16	6.40	1.18	6.50	1.20	6.61	1.21	6.85	1.23	7.13	1.25
							20	4.92	1.16	6.08	1.19	6.26	1.21	6.36	1.22	6.47	1.24	6.72	1.26	7.01	1.28
							21	4.92	1.18	6.00	1.20	6.18	1.23	6.29	1.24	6.40	1.25	6.66	1.27	6.95	1.30
							23	4.92	1.21	5.85	1.23	6.05	1.26	6.16	1.27	6.28	1.28	6.54	1.30	6.84	1.32
							25	4.92	1.24	5.72	1.26	5.92	1.29	6.03	1.30	6.16	1.31	6.43	1.33	6.74	1.36
							27	4.92	1.27	5.58	1.29	5.80	1.32	5.92	1.33	6.05	1.34	6.33	1.36	6.65	1.39
							29	4.92	1.30	5.46	1.33	5.68	1.35	5.81	1.36	5.94	1.37	6.24	1.40	6.57	1.42
							31	4.92	1.33	5.35	1.36	5.58	1.38	5.71	1.40	5.85	1.41	6.15	1.43	6.49	1.45
							33	4.92	1.37	5.24	1.39	5.48	1.42	5.61	1.43	5.76	1.44	6.07	1.46	6.42	1.48
							35	4.92	1.40	5.14	1.43	5.39	1.45	5.57	1.46	5.68	1.47	6.00	1.50	6.36	1.52
							37	4.92	1.44	5.05	1.46	5.31	1.49	5.45	1.50	5.60	1.51	5.94	1.53	6.30	1.55
							39	4.92	1.48	4.96	1.50	5.23	1.52	5.38	1.53	5.54	1.55	5.88	1.57	6.26	1.59
							42	4.92	1.53	4.85	1.56	5.14	1.58	5.29	1.59	5.46	1.60	5.81	1.62	6.20	1.64
							44	4.92	1.57	4.78	1.59	5.08	1.62	5.24	1.63	5.41	1.64	5.78	1.66	6.18	1.68
							46	4.92	1.61	4.73	1.63	5.03	1.66	5.20	1.67	5.37	1.68	5.75	1.70	6.16	1.72

12. Capacity Table

12-6. AJ125TXJ5KH/EA

COOLING

Combination (Capacity Index)					Combination (Total)	Combination (%)	Outdoor Temperature (°C,DB)	Indoor Temperature (°F, WB)													
								14		16		18		19		20		22		24	
								TC(kW)	PI(kW)	TC(kW)	PI(kW)	TC(kW)	PI(kW)	TC(kW)	PI(kW)	TC(kW)	PI(kW)	TC(kW)	PI(kW)	TC(kW)	PI(kW)
2000	5000				7000	50%	10	6.24	1.26	8.80	1.30	8.97	1.33	9.07	1.34	9.18	1.36	9.44	1.39	9.74	1.41
							12	6.24	1.30	8.56	1.33	8.74	1.36	8.85	1.37	8.96	1.39	9.23	1.42	9.55	1.44
							14	6.24	1.33	8.33	1.36	8.52	1.39	8.64	1.41	8.76	1.42	9.04	1.45	9.37	1.48
							16	6.24	1.36	8.11	1.39	8.32	1.42	8.43	1.44	8.56	1.45	8.86	1.48	9.20	1.51
							18	6.24	1.40	7.90	1.43	8.12	1.46	8.24	1.47	8.38	1.49	8.68	1.52	9.03	1.54
							20	6.24	1.43	7.70	1.46	7.93	1.49	8.06	1.51	8.20	1.52	8.52	1.55	8.88	1.58
							21	6.24	1.45	7.61	1.48	7.84	1.51	7.97	1.53	8.12	1.54	8.44	1.57	8.81	1.60
							23	6.24	1.49	7.42	1.52	7.67	1.55	7.81	1.56	7.96	1.58	8.29	1.61	8.67	1.63
							25	6.24	1.53	7.24	1.56	7.50	1.59	7.65	1.60	7.81	1.62	8.15	1.64	8.55	1.67
							27	6.24	1.56	7.08	1.60	7.35	1.63	7.50	1.64	7.66	1.65	8.02	1.68	8.43	1.71
							29	6.24	1.60	6.92	1.64	7.20	1.67	7.36	1.68	7.53	1.69	7.90	1.72	8.32	1.75
							31	6.24	1.65	6.78	1.68	7.07	1.71	7.23	1.72	7.41	1.73	7.79	1.76	8.22	1.79
							33	6.24	1.69	6.64	1.72	6.95	1.75	7.12	1.76	7.30	1.78	7.69	1.80	8.14	1.83
							35	6.24	1.73	6.51	1.76	6.83	1.79	7.06	1.80	7.20	1.82	7.60	1.85	8.06	1.87
							37	6.24	1.77	6.40	1.80	6.73	1.83	6.91	1.85	7.10	1.86	7.52	1.89	7.99	1.91
							39	6.24	1.82	6.29	1.85	6.63	1.88	6.82	1.89	7.02	1.91	7.45	1.93	7.93	1.96
							42	6.24	1.89	6.15	1.92	6.51	1.95	6.71	1.96	6.92	1.97	7.37	2.00	7.86	2.03
							44	6.24	1.93	6.06	1.96	6.44	1.99	6.64	2.01	6.86	2.02	7.32	2.05	7.83	2.07
							46	6.24	1.98	5.99	2.01	6.38	2.04	6.59	2.05	6.81	2.07	7.28	2.10	7.81	2.12
2000	6800				8800	63%	10	7.51	1.91	10.60	1.96	10.80	2.01	10.92	2.03	11.05	2.05	11.36	2.09	11.72	2.14
							12	7.51	1.96	10.31	2.01	10.52	2.05	10.65	2.08	10.79	2.10	11.12	2.14	11.49	2.18
							14	7.51	2.01	10.03	2.06	10.26	2.10	10.40	2.13	10.55	2.15	10.88	2.19	11.28	2.23
							16	7.51	2.06	9.77	2.11	10.01	2.15	10.15	2.18	10.31	2.20	10.66	2.24	11.07	2.28
							18	7.51	2.11	9.51	2.16	9.77	2.21	9.92	2.23	10.09	2.25	10.45	2.29	10.88	2.33
							20	7.51	2.17	9.27	2.21	9.55	2.26	9.70	2.28	9.87	2.30	10.26	2.35	10.69	2.39
							21	7.51	2.19	9.16	2.24	9.44	2.29	9.60	2.31	9.77	2.33	10.16	2.37	10.61	2.41
							23	7.51	2.25	8.93	2.30	9.23	2.34	9.40	2.36	9.58	2.39	9.98	2.43	10.44	2.47
							25	7.51	2.31	8.72	2.35	9.03	2.40	9.21	2.42	9.40	2.44	9.82	2.48	10.29	2.52
							27	7.51	2.36	8.52	2.41	8.85	2.46	9.03	2.48	9.23	2.50	9.66	2.54	10.15	2.58
							29	7.51	2.43	8.33	2.47	8.67	2.52	8.86	2.54	9.07	2.56	9.52	2.60	10.02	2.64
							31	7.51	2.49	8.16	2.53	8.51	2.58	8.71	2.60	8.92	2.62	9.38	2.66	9.90	2.70
							33	7.51	2.55	7.99	2.60	8.36	2.64	8.57	2.66	8.79	2.68	9.26	2.73	9.80	2.76
							35	7.51	2.61	7.84	2.66	8.23	2.71	8.50	2.72	8.66	2.75	9.16	2.79	9.70	2.83
							37	7.51	2.68	7.70	2.73	8.10	2.77	8.32	2.79	8.55	2.81	9.06	2.85	9.62	2.89
							39	7.51	2.75	7.57	2.79	7.99	2.84	8.21	2.86	8.45	2.88	8.97	2.92	9.55	2.96
							42	7.51	2.85	7.40	2.90	7.84	2.94	8.07	2.96	8.33	2.98	8.87	3.02	9.47	3.06
							44	7.51	2.92	7.30	2.97	7.75	3.01	8.00	3.03	8.26	3.05	8.81	3.09	9.43	3.13
							46	7.51	3.00	7.21	3.04	7.68	3.08	7.93	3.11	8.20	3.13	8.77	3.17	9.40	3.20

12. Capacity Table

12-6. AJ125TXJ5KH/EA

COOLING

Combination (Capacity Index)					Combination (Total)	Combination (%)	Outdoor Temperature (°C,DB)	Indoor Temperature (°F, WB)													
								14		16		18		19		20		22		24	
								TC(kW)	PI(kW)	TC(kW)	PI(kW)	TC(kW)	PI(kW)	TC(kW)	PI(kW)	TC(kW)	PI(kW)	TC(kW)	PI(kW)	TC(kW)	PI(kW)
2500	2500				5000	36%	10	4.67	0.95	6.58	0.97	6.71	1.00	6.78	1.01	6.87	1.02	7.06	1.04	7.28	1.06
							12	4.67	0.97	6.40	1.00	6.54	1.02	6.62	1.03	6.70	1.04	6.91	1.06	7.14	1.08
							14	4.67	1.00	6.23	1.02	6.37	1.04	6.46	1.05	6.55	1.07	6.76	1.09	7.00	1.11
							16	4.67	1.02	6.07	1.05	6.22	1.07	6.31	1.08	6.40	1.09	6.62	1.11	6.88	1.13
							18	4.67	1.05	5.91	1.07	6.07	1.09	6.16	1.11	6.27	1.12	6.49	1.14	6.76	1.16
							20	4.67	1.07	5.76	1.10	5.93	1.12	6.03	1.13	6.13	1.14	6.37	1.16	6.64	1.18
							21	4.67	1.09	5.69	1.11	5.86	1.13	5.96	1.15	6.07	1.16	6.31	1.18	6.59	1.20
							23	4.67	1.12	5.55	1.14	5.73	1.16	5.84	1.17	5.95	1.18	6.20	1.20	6.49	1.22
							25	4.67	1.14	5.42	1.17	5.61	1.19	5.72	1.20	5.84	1.21	6.10	1.23	6.39	1.25
							27	4.67	1.17	5.29	1.20	5.50	1.22	5.61	1.23	5.73	1.24	6.00	1.26	6.30	1.28
							29	4.67	1.20	5.18	1.23	5.39	1.25	5.51	1.26	5.63	1.27	5.91	1.29	6.22	1.31
							31	4.67	1.23	5.07	1.26	5.29	1.28	5.41	1.29	5.54	1.30	5.83	1.32	6.15	1.34
							33	4.67	1.27	4.97	1.29	5.20	1.31	5.32	1.32	5.46	1.33	5.75	1.35	6.09	1.37
							35	4.67	1.30	4.87	1.32	5.11	1.34	5.28	1.35	5.38	1.36	5.69	1.38	6.03	1.40
							37	4.67	1.33	4.78	1.35	5.03	1.38	5.17	1.39	5.31	1.40	5.63	1.42	5.98	1.44
							39	4.67	1.36	4.70	1.39	4.96	1.41	5.10	1.42	5.25	1.43	5.57	1.45	5.93	1.47
							42	4.67	1.42	4.60	1.44	4.87	1.46	5.02	1.47	5.17	1.48	5.51	1.50	5.88	1.52
							44	4.67	1.45	4.54	1.47	4.82	1.49	4.97	1.51	5.13	1.52	5.48	1.54	5.86	1.56
							46	4.67	1.49	4.48	1.51	4.77	1.53	4.93	1.54	5.09	1.55	5.45	1.57	5.84	1.59
2500	3500				6000	43%	10	5.44	1.10	7.67	1.12	7.81	1.15	7.90	1.16	8.00	1.18	8.22	1.20	8.48	1.23
							12	5.44	1.12	7.46	1.15	7.61	1.18	7.71	1.19	7.81	1.20	8.04	1.23	8.32	1.25
							14	5.44	1.15	7.26	1.18	7.42	1.21	7.52	1.22	7.63	1.23	7.87	1.26	8.16	1.28
							16	5.44	1.18	7.07	1.21	7.24	1.23	7.35	1.25	7.46	1.26	7.72	1.29	8.01	1.31
							18	5.44	1.21	6.88	1.24	7.07	1.26	7.18	1.28	7.30	1.29	7.56	1.31	7.87	1.34
							20	5.44	1.24	6.71	1.27	6.91	1.30	7.02	1.31	7.14	1.32	7.42	1.35	7.74	1.37
							21	5.44	1.26	6.63	1.28	6.83	1.31	6.95	1.32	7.07	1.34	7.35	1.36	7.67	1.38
							23	5.44	1.29	6.46	1.32	6.68	1.34	6.80	1.36	6.93	1.37	7.22	1.39	7.56	1.42
							25	5.44	1.32	6.31	1.35	6.54	1.38	6.66	1.39	6.80	1.40	7.10	1.42	7.44	1.45
							27	5.44	1.36	6.17	1.38	6.40	1.41	6.53	1.42	6.68	1.43	6.99	1.46	7.34	1.48
							29	5.44	1.39	6.03	1.42	6.28	1.44	6.41	1.46	6.56	1.47	6.89	1.49	7.25	1.52
							31	5.44	1.43	5.90	1.45	6.16	1.48	6.30	1.49	6.46	1.50	6.79	1.53	7.16	1.55
							33	5.44	1.46	5.78	1.49	6.05	1.51	6.20	1.53	6.36	1.54	6.70	1.56	7.09	1.59
							35	5.44	1.50	5.67	1.53	5.95	1.55	6.15	1.56	6.27	1.58	6.62	1.60	7.02	1.62
							37	5.44	1.54	5.57	1.56	5.86	1.59	6.02	1.60	6.19	1.61	6.55	1.64	6.96	1.66
							39	5.44	1.58	5.48	1.60	5.78	1.63	5.94	1.64	6.12	1.65	6.49	1.68	6.91	1.70
							42	5.44	1.64	5.35	1.66	5.67	1.69	5.84	1.70	6.02	1.71	6.42	1.73	6.85	1.76
							44	5.44	1.68	5.28	1.70	5.61	1.73	5.79	1.74	5.97	1.75	6.38	1.77	6.82	1.80
							46	5.44	1.72	5.22	1.74	5.56	1.77	5.74	1.78	5.93	1.79	6.35	1.82	6.80	1.84

12. Capacity Table

12-6. AJ125TXJ5KH/EA

COOLING

Combination (Capacity Index)					Combination (Total)	Combination (%)	Outdoor Temperature (°C,DB)	Indoor Temperature (°F, WB)													
								14		16		18		19		20		22		24	
								TC(kW)	PI(kW)	TC(kW)	PI(kW)	TC(kW)	PI(kW)	TC(kW)	PI(kW)	TC(kW)	PI(kW)	TC(kW)	PI(kW)	TC(kW)	PI(kW)
2500	5000				7500	54%	10	6.76	1.59	9.54	1.63	9.72	1.67	9.83	1.69	9.95	1.70	10.22	1.74	10.55	1.78
							12	6.76	1.63	9.28	1.67	9.47	1.71	9.59	1.73	9.71	1.74	10.00	1.78	10.34	1.81
							14	6.76	1.67	9.03	1.71	9.24	1.75	9.36	1.77	9.49	1.78	9.80	1.82	10.15	1.85
							16	6.76	1.71	8.79	1.75	9.01	1.79	9.14	1.81	9.28	1.83	9.60	1.86	9.96	1.90
							18	6.76	1.75	8.56	1.79	8.80	1.83	8.93	1.85	9.08	1.87	9.41	1.90	9.79	1.94
							20	6.76	1.80	8.35	1.84	8.59	1.88	8.73	1.90	8.89	1.91	9.23	1.95	9.62	1.98
							21	6.76	1.82	8.24	1.86	8.49	1.90	8.64	1.92	8.80	1.94	9.15	1.97	9.55	2.01
							23	6.76	1.87	8.04	1.91	8.31	1.95	8.46	1.96	8.62	1.98	8.99	2.02	9.40	2.05
							25	6.76	1.92	7.85	1.96	8.13	1.99	8.29	2.01	8.46	2.03	8.83	2.06	9.26	2.10
							27	6.76	1.96	7.67	2.00	7.96	2.04	8.13	2.06	8.30	2.08	8.69	2.11	9.13	2.15
							29	6.76	2.01	7.50	2.05	7.81	2.09	7.98	2.11	8.16	2.13	8.57	2.16	9.02	2.20
							31	6.76	2.07	7.34	2.10	7.66	2.14	7.84	2.16	8.03	2.18	8.45	2.21	8.91	2.25
							33	6.76	2.12	7.19	2.16	7.53	2.19	7.71	2.21	7.91	2.23	8.34	2.26	8.82	2.30
							35	6.76	2.17	7.06	2.21	7.40	2.25	7.65	2.26	7.80	2.28	8.24	2.32	8.73	2.35
							37	6.76	2.23	6.93	2.27	7.29	2.30	7.49	2.32	7.70	2.34	8.15	2.37	8.66	2.40
							39	6.76	2.28	6.81	2.32	7.19	2.36	7.39	2.38	7.61	2.39	8.08	2.43	8.60	2.46
							42	6.76	2.37	6.66	2.41	7.05	2.44	7.27	2.46	7.49	2.48	7.98	2.51	8.52	2.54
							44	6.76	2.43	6.57	2.47	6.98	2.50	7.20	2.52	7.43	2.54	7.93	2.57	8.48	2.60
							46	6.76	2.49	6.49	2.53	6.91	2.56	7.14	2.58	7.38	2.60	7.89	2.63	8.46	2.66
2500	6800				9300	66%	10	8.03	2.02	11.33	2.07	11.55	2.12	11.68	2.15	11.82	2.17	12.15	2.22	12.54	2.26
							12	8.03	2.07	11.02	2.13	11.25	2.17	11.39	2.20	11.54	2.22	11.89	2.27	12.29	2.31
							14	8.03	2.13	10.73	2.18	10.97	2.23	11.12	2.25	11.28	2.27	11.64	2.32	12.06	2.36
							16	8.03	2.18	10.44	2.23	10.71	2.28	10.86	2.30	11.03	2.33	11.40	2.37	11.84	2.42
							18	8.03	2.24	10.17	2.29	10.45	2.33	10.61	2.36	10.79	2.38	11.18	2.43	11.63	2.47
							20	8.03	2.29	9.92	2.34	10.21	2.39	10.38	2.41	10.56	2.44	10.97	2.48	11.44	2.53
							21	8.03	2.32	9.79	2.37	10.09	2.42	10.27	2.44	10.45	2.47	10.87	2.51	11.34	2.56
							23	8.03	2.38	9.55	2.43	9.87	2.48	10.05	2.50	10.24	2.53	10.68	2.57	11.17	2.61
							25	8.03	2.44	9.33	2.49	9.66	2.54	9.85	2.56	10.05	2.59	10.50	2.63	11.00	2.67
							27	8.03	2.50	9.11	2.55	9.46	2.60	9.66	2.62	9.87	2.65	10.33	2.69	10.85	2.73
							29	8.03	2.57	8.91	2.62	9.28	2.66	9.48	2.69	9.70	2.71	10.18	2.75	10.71	2.80
							31	8.03	2.63	8.72	2.68	9.10	2.73	9.32	2.75	9.54	2.78	10.04	2.82	10.59	2.86
							33	8.03	2.70	8.55	2.75	8.94	2.80	9.16	2.82	9.40	2.84	9.91	2.89	10.48	2.93
							35	8.03	2.77	8.39	2.82	8.80	2.86	9.09	2.88	9.26	2.91	9.79	2.95	10.38	2.99
							37	8.03	2.84	8.24	2.89	8.66	2.93	8.90	2.96	9.15	2.98	9.69	3.02	10.29	3.06
							39	8.03	2.91	8.10	2.96	8.54	3.00	8.78	3.03	9.04	3.05	9.60	3.09	10.21	3.13
							42	8.03	3.02	7.91	3.07	8.38	3.11	8.63	3.14	8.90	3.16	9.49	3.20	10.12	3.24
							44	8.03	3.10	7.81	3.14	8.29	3.19	8.55	3.21	8.83	3.23	9.43	3.28	10.08	3.32
							46	8.03	3.17	7.72	3.22	8.21	3.27	8.48	3.29	8.77	3.31	9.38	3.35	10.05	3.39

12. Capacity Table

12-6. AJ125TXJ5KH/EA

COOLING

Combination (Capacity Index)					Combination (Total)	Combination (%)	Outdoor Temperature (°C,DB)	Indoor Temperature (°F, WB)													
								14		16		18		19		20		22		24	
								TC(kW)	PI(kW)	TC(kW)	PI(kW)	TC(kW)	PI(kW)	TC(kW)	PI(kW)	TC(kW)	PI(kW)	TC(kW)	PI(kW)	TC(kW)	PI(kW)
3500	3500				7000	50%	10	6.21	1.24	8.76	1.27	8.93	1.31	9.03	1.32	9.14	1.33	9.40	1.36	9.70	1.39
							12	6.21	1.27	8.53	1.31	8.70	1.34	8.81	1.35	8.93	1.37	9.19	1.39	9.51	1.42
							14	6.21	1.31	8.30	1.34	8.49	1.37	8.60	1.38	8.72	1.40	9.00	1.43	9.33	1.45
							16	6.21	1.34	8.08	1.37	8.28	1.40	8.40	1.42	8.53	1.43	8.82	1.46	9.16	1.48
							18	6.21	1.37	7.87	1.40	8.08	1.43	8.21	1.45	8.34	1.46	8.65	1.49	9.00	1.52
							20	6.21	1.41	7.67	1.44	7.90	1.47	8.03	1.48	8.17	1.50	8.48	1.53	8.84	1.55
							21	6.21	1.43	7.57	1.46	7.81	1.49	7.94	1.50	8.08	1.52	8.41	1.54	8.77	1.57
							23	6.21	1.46	7.39	1.49	7.63	1.52	7.77	1.54	7.92	1.55	8.26	1.58	8.64	1.61
							25	6.21	1.50	7.21	1.53	7.47	1.56	7.62	1.58	7.77	1.59	8.12	1.62	8.51	1.64
							27	6.21	1.54	7.05	1.57	7.32	1.60	7.47	1.61	7.63	1.63	7.99	1.65	8.39	1.68
							29	6.21	1.58	6.89	1.61	7.17	1.64	7.33	1.65	7.50	1.67	7.87	1.69	8.29	1.72
							31	6.21	1.62	6.75	1.65	7.04	1.68	7.20	1.69	7.38	1.71	7.76	1.73	8.19	1.76
							33	6.21	1.66	6.61	1.69	6.92	1.72	7.09	1.73	7.27	1.75	7.66	1.77	8.10	1.80
							35	6.21	1.70	6.49	1.73	6.80	1.76	7.03	1.77	7.17	1.79	7.57	1.81	8.02	1.84
							37	6.21	1.74	6.37	1.77	6.70	1.80	6.88	1.82	7.07	1.83	7.49	1.86	7.96	1.88
							39	6.21	1.79	6.26	1.82	6.60	1.85	6.79	1.86	6.99	1.87	7.42	1.90	7.90	1.93
							42	6.21	1.86	6.12	1.89	6.48	1.91	6.68	1.93	6.89	1.94	7.34	1.97	7.83	1.99
							44	6.21	1.90	6.04	1.93	6.41	1.96	6.61	1.97	6.83	1.99	7.29	2.01	7.80	2.04
							46	6.21	1.95	5.97	1.98	6.35	2.01	6.56	2.02	6.78	2.03	7.25	2.06	7.77	2.09
3500	5000				8500	61%	10	7.54	1.80	10.63	1.84	10.83	1.89	10.96	1.91	11.09	1.93	11.40	1.97	11.77	2.01
							12	7.54	1.84	10.34	1.89	10.56	1.93	10.69	1.95	10.83	1.98	11.16	2.02	11.53	2.06
							14	7.54	1.89	10.07	1.94	10.30	1.98	10.43	2.00	10.58	2.02	10.92	2.06	11.32	2.10
							16	7.54	1.94	9.80	1.98	10.05	2.03	10.19	2.05	10.35	2.07	10.70	2.11	11.11	2.15
							18	7.54	1.99	9.55	2.03	9.81	2.08	9.96	2.10	10.12	2.12	10.49	2.16	10.91	2.20
							20	7.54	2.04	9.31	2.08	9.58	2.13	9.74	2.15	9.91	2.17	10.29	2.21	10.73	2.25
							21	7.54	2.06	9.19	2.11	9.47	2.15	9.63	2.17	9.81	2.19	10.20	2.23	10.64	2.27
							23	7.54	2.12	8.96	2.16	9.26	2.20	9.43	2.22	9.61	2.24	10.02	2.28	10.48	2.32
							25	7.54	2.17	8.75	2.21	9.06	2.26	9.24	2.28	9.43	2.30	9.85	2.34	10.33	2.38
							27	7.54	2.23	8.55	2.27	8.88	2.31	9.06	2.33	9.26	2.35	9.69	2.39	10.18	2.43
							29	7.54	2.28	8.36	2.33	8.70	2.37	8.90	2.39	9.10	2.41	9.55	2.45	10.05	2.49
							31	7.54	2.34	8.19	2.38	8.54	2.43	8.74	2.45	8.95	2.47	9.42	2.51	9.94	2.54
							33	7.54	2.40	8.02	2.44	8.39	2.49	8.60	2.51	8.82	2.53	9.30	2.56	9.83	2.60
							35	7.54	2.46	7.87	2.50	8.25	2.55	8.53	2.56	8.69	2.59	9.19	2.62	9.74	2.66
							37	7.54	2.52	7.73	2.57	8.13	2.61	8.35	2.63	8.58	2.65	9.09	2.69	9.65	2.72
							39	7.54	2.59	7.60	2.63	8.01	2.67	8.24	2.69	8.48	2.71	9.01	2.75	9.58	2.79
							42	7.54	2.68	7.43	2.73	7.86	2.77	8.10	2.79	8.36	2.81	8.90	2.85	9.50	2.88
							44	7.54	2.75	7.33	2.79	7.78	2.83	8.03	2.85	8.28	2.87	8.85	2.91	9.46	2.95
							46	7.54	2.82	7.24	2.86	7.71	2.90	7.96	2.92	8.23	2.94	8.80	2.98	9.43	3.02

12. Capacity Table

12-6. AJ125TXJ5KH/EA

COOLING

Combination (Capacity Index)					Combination (Total)	Combination (%)	Outdoor Temperature (°C,DB)	Indoor Temperature (°F, WB)													
								14		16		18		19		20		22		24	
								TC(kW)	PI(kW)	TC(kW)	PI(kW)	TC(kW)	PI(kW)	TC(kW)	PI(kW)	TC(kW)	PI(kW)	TC(kW)	PI(kW)	TC(kW)	PI(kW)
3500	6800				10300	74%	10	8.80	2.40	12.42	2.46	12.65	2.52	12.79	2.55	12.95	2.58	13.31	2.63	13.74	2.69
							12	8.80	2.46	12.08	2.52	12.33	2.58	12.48	2.61	12.65	2.64	13.03	2.69	13.47	2.75
							14	8.80	2.53	11.75	2.59	12.02	2.64	12.18	2.67	12.36	2.70	12.75	2.75	13.21	2.81
							16	8.80	2.59	11.44	2.65	11.73	2.71	11.90	2.74	12.08	2.76	12.49	2.82	12.97	2.87
							18	8.80	2.65	11.15	2.71	11.45	2.77	11.63	2.80	11.82	2.83	12.25	2.88	12.74	2.93
							20	8.80	2.72	10.87	2.78	11.19	2.84	11.37	2.87	11.57	2.90	12.02	2.95	12.53	3.00
							21	8.80	2.76	10.73	2.82	11.06	2.87	11.25	2.90	11.45	2.93	11.91	2.98	12.43	3.03
							23	8.80	2.83	10.47	2.89	10.81	2.94	11.01	2.97	11.22	3.00	11.70	3.05	12.24	3.10
							25	8.80	2.90	10.22	2.96	10.58	3.02	10.79	3.04	11.01	3.07	11.50	3.12	12.06	3.17
							27	8.80	2.97	9.99	3.03	10.37	3.09	10.58	3.12	10.81	3.14	11.32	3.20	11.89	3.25
							29	8.80	3.05	9.77	3.11	10.16	3.16	10.39	3.19	10.63	3.22	11.15	3.27	11.74	3.32
							31	8.80	3.13	9.56	3.19	9.97	3.24	10.21	3.27	10.45	3.30	11.00	3.35	11.60	3.40
							33	8.80	3.21	9.37	3.26	9.80	3.32	10.04	3.35	10.30	3.37	10.86	3.43	11.48	3.48
							35	8.80	3.29	9.19	3.35	9.64	3.40	9.96	3.42	10.15	3.45	10.73	3.51	11.37	3.56
							37	8.80	3.37	9.02	3.43	9.49	3.48	9.75	3.51	10.02	3.54	10.62	3.59	11.27	3.64
							39	8.80	3.46	8.87	3.51	9.36	3.57	9.62	3.60	9.90	3.62	10.52	3.67	11.19	3.72
							42	8.80	3.59	8.67	3.64	9.18	3.70	9.46	3.72	9.76	3.75	10.39	3.80	11.09	3.85
							44	8.80	3.68	8.56	3.73	9.08	3.79	9.37	3.81	9.67	3.84	10.33	3.89	11.05	3.94
							46	8.80	3.77	8.45	3.82	9.00	3.88	9.29	3.90	9.61	3.93	10.28	3.98	11.01	4.03
5000	5000				10000	71%	10	8.86	2.18	12.49	2.23	12.73	2.29	12.87	2.31	13.03	2.34	13.39	2.39	13.82	2.43
							12	8.86	2.23	12.15	2.29	12.41	2.34	12.56	2.37	12.72	2.39	13.10	2.44	13.55	2.49
							14	8.86	2.29	11.83	2.34	12.10	2.40	12.26	2.42	12.43	2.45	12.83	2.50	13.29	2.54
							16	8.86	2.35	11.51	2.40	11.80	2.45	11.97	2.48	12.15	2.50	12.57	2.55	13.05	2.60
							18	8.86	2.41	11.22	2.46	11.52	2.51	11.70	2.54	11.89	2.56	12.32	2.61	12.82	2.66
							20	8.86	2.47	10.93	2.52	11.25	2.57	11.44	2.60	11.64	2.62	12.09	2.67	12.61	2.72
							21	8.86	2.50	10.79	2.55	11.13	2.61	11.32	2.63	11.52	2.66	11.98	2.70	12.50	2.75
							23	8.86	2.56	10.53	2.62	10.88	2.67	11.08	2.69	11.29	2.72	11.77	2.77	12.31	2.81
							25	8.86	2.63	10.28	2.68	10.65	2.73	10.85	2.76	11.08	2.78	11.57	2.83	12.13	2.88
							27	8.86	2.70	10.05	2.75	10.43	2.80	10.65	2.82	10.88	2.85	11.39	2.90	11.96	2.94
							29	8.86	2.76	9.82	2.82	10.23	2.87	10.45	2.89	10.69	2.92	11.22	2.97	11.81	3.01
							31	8.86	2.83	9.62	2.89	10.04	2.94	10.27	2.96	10.52	2.99	11.06	3.03	11.67	3.08
							33	8.86	2.91	9.42	2.96	9.86	3.01	10.10	3.03	10.36	3.06	10.92	3.11	11.55	3.15
							35	8.86	2.98	9.24	3.03	9.70	3.08	10.02	3.10	10.21	3.13	10.79	3.18	11.44	3.22
							37	8.86	3.06	9.08	3.11	9.55	3.16	9.81	3.18	10.08	3.21	10.68	3.25	11.34	3.30
							39	8.86	3.13	8.93	3.18	9.41	3.23	9.68	3.26	9.96	3.28	10.58	3.33	11.26	3.37
							42	8.86	3.25	8.72	3.30	9.24	3.35	9.52	3.38	9.81	3.40	10.46	3.45	11.16	3.49
							44	8.86	3.33	8.61	3.38	9.14	3.43	9.43	3.46	9.73	3.48	10.39	3.53	11.11	3.57
							46	8.86	3.41	8.50	3.47	9.05	3.52	9.35	3.54	9.66	3.56	10.34	3.61	11.08	3.65

12. Capacity Table

12-6. AJ125TXJ5KH/EA

COOLING

Combination (Capacity Index)					Combination (Total)	Combination (%)	Outdoor Temperature (°C,DB)	Indoor Temperature (°F, WB)													
								14		16		18		19		20		22		24	
								TC(kW)	PI(kW)	TC(kW)	PI(kW)	TC(kW)	PI(kW)	TC(kW)	PI(kW)	TC(kW)	PI(kW)	TC(kW)	PI(kW)	TC(kW)	PI(kW)
5000	6800				11800	84%	10	10.13	2.47	14.29	2.54	14.56	2.60	14.72	2.63	14.90	2.65	15.32	2.71	15.81	2.76
							12	10.13	2.53	13.90	2.60	14.19	2.66	14.36	2.69	14.55	2.72	14.99	2.77	15.50	2.83
							14	10.13	2.60	13.52	2.66	13.83	2.72	14.02	2.75	14.22	2.78	14.67	2.83	15.20	2.89
							16	10.13	2.66	13.17	2.73	13.50	2.79	13.69	2.82	13.90	2.84	14.38	2.90	14.93	2.95
							18	10.13	2.73	12.83	2.79	13.18	2.85	13.38	2.88	13.60	2.91	14.09	2.97	14.66	3.02
							20	10.13	2.80	12.50	2.86	12.87	2.92	13.08	2.95	13.31	2.98	13.83	3.03	14.42	3.09
							21	10.13	2.84	12.35	2.90	12.72	2.96	12.94	2.99	13.18	3.02	13.70	3.07	14.30	3.12
							23	10.13	2.91	12.04	2.97	12.44	3.03	12.67	3.06	12.92	3.09	13.46	3.14	14.08	3.19
							25	10.13	2.98	11.76	3.04	12.18	3.10	12.41	3.13	12.67	3.16	13.23	3.21	13.87	3.27
							27	10.13	3.06	11.49	3.12	11.93	3.18	12.18	3.21	12.44	3.24	13.02	3.29	13.68	3.34
							29	10.13	3.14	11.24	3.20	11.69	3.26	11.95	3.29	12.23	3.31	12.83	3.37	13.51	3.42
							31	10.13	3.22	11.00	3.28	11.48	3.34	11.74	3.36	12.03	3.39	12.65	3.45	13.35	3.50
							33	10.13	3.30	10.78	3.36	11.28	3.42	11.55	3.45	11.85	3.47	12.49	3.53	13.21	3.58
							35	10.13	3.38	10.57	3.44	11.09	3.50	11.46	3.52	11.68	3.56	12.34	3.61	13.08	3.66
							37	10.13	3.47	10.38	3.53	10.92	3.59	11.22	3.61	11.53	3.64	12.21	3.69	12.97	3.74
							39	10.13	3.56	10.21	3.62	10.77	3.67	11.07	3.70	11.40	3.73	12.10	3.78	12.88	3.83
							42	10.13	3.69	9.98	3.75	10.57	3.81	10.89	3.83	11.23	3.86	11.96	3.91	12.76	3.96
							44	10.13	3.78	9.84	3.84	10.45	3.90	10.78	3.93	11.13	3.95	11.88	4.00	12.71	4.05
							46	10.13	3.88	9.73	3.94	10.35	3.99	10.69	4.02	11.05	4.05	11.83	4.10	12.67	4.15
6800	6800				13600	97%	10	13.04	2.72	13.56	2.77	14.08	2.83	14.34	2.86	14.60	2.89	15.14	2.95	15.68	3.00
							12	12.82	2.79	13.33	2.85	13.85	2.90	14.11	2.93	14.38	2.96	14.92	3.02	15.46	3.08
							14	12.59	2.86	13.10	2.92	13.63	2.98	13.89	3.01	14.16	3.04	14.69	3.10	15.24	3.16
							16	12.37	2.94	12.88	3.00	13.40	3.06	13.67	3.09	13.93	3.11	14.47	3.17	15.02	3.23
							18	12.14	3.01	12.66	3.07	13.18	3.13	13.45	3.16	13.71	3.19	14.25	3.25	14.80	3.31
							20	11.92	3.09	12.43	3.15	12.96	3.21	13.22	3.24	13.49	3.27	14.03	3.33	14.58	3.39
							21	11.80	3.13	12.32	3.19	12.85	3.25	13.11	3.28	13.38	3.31	13.92	3.37	14.47	3.43
							23	11.58	3.21	12.10	3.27	12.63	3.33	12.89	3.36	13.16	3.39	13.70	3.45	14.25	3.51
							25	11.36	3.29	11.88	3.35	12.41	3.42	12.67	3.45	12.94	3.48	13.48	3.54	14.03	3.60
							27	11.14	3.38	11.66	3.44	12.19	3.50	12.45	3.53	12.72	3.56	13.27	3.62	13.82	3.68
							29	10.91	3.46	11.44	3.52	11.97	3.58	12.23	3.61	12.50	3.65	13.05	3.71	13.60	3.77
							31	10.69	3.55	11.22	3.61	11.75	3.67	12.01	3.70	12.28	3.73	12.83	3.79	13.38	3.86
							33	10.47	3.63	11.00	3.70	11.53	3.76	11.80	3.79	12.07	3.82	12.61	3.88	13.17	3.94
							35	10.25	3.72	10.78	3.78	11.31	3.85	11.60	3.87	11.85	3.91	12.40	3.97	12.95	4.04
							37	10.03	3.81	10.56	3.87	11.09	3.94	11.36	3.97	11.63	4.00	12.18	4.06	12.74	4.13
							39	9.81	3.90	10.34	3.97	10.88	4.03	11.15	4.06	11.42	4.09	11.97	4.16	12.52	4.22
							42	9.49	4.04	10.02	4.11	10.55	4.17	10.82	4.20	11.10	4.23	11.65	4.30	12.21	4.36
							44	9.27	4.14	9.80	4.20	10.34	4.26	10.61	4.30	10.88	4.33	11.43	4.39	11.99	4.46
							46	9.05	4.23	9.58	4.30	10.12	4.36	10.39	4.39	10.67	4.43	11.22	4.49	11.78	4.56

12. Capacity Table

12-6. AJ125TXJ5KH/EA

COOLING

Combination (Capacity Index)					Combination (Total)	Combination (%)	Outdoor Temperature (°C,DB)	Indoor Temperature (°F, WB)													
								14		16		18		19		20		22		24	
								TC(kW)	PI(kW)	TC(kW)	PI(kW)	TC(kW)	PI(kW)	TC(kW)	PI(kW)	TC(kW)	PI(kW)	TC(kW)	PI(kW)	TC(kW)	PI(kW)
2000	2000	2000			6000	43%	10	5.44	1.31	7.67	1.34	7.81	1.37	7.90	1.39	8.00	1.40	8.22	1.43	8.48	1.46
							12	5.44	1.34	7.46	1.37	7.61	1.40	7.71	1.42	7.81	1.43	8.04	1.46	8.32	1.49
							14	5.44	1.37	7.26	1.41	7.42	1.44	7.52	1.45	7.63	1.47	7.87	1.50	8.16	1.53
							16	5.44	1.41	7.07	1.44	7.24	1.47	7.35	1.49	7.46	1.50	7.72	1.53	8.01	1.56
							18	5.44	1.44	6.88	1.48	7.07	1.51	7.18	1.52	7.30	1.54	7.56	1.57	7.87	1.60
							20	5.44	1.48	6.71	1.51	6.91	1.54	7.02	1.56	7.14	1.57	7.42	1.60	7.74	1.63
							21	5.44	1.50	6.63	1.53	6.83	1.56	6.95	1.58	7.07	1.59	7.35	1.62	7.67	1.65
							23	5.44	1.54	6.46	1.57	6.68	1.60	6.80	1.62	6.93	1.63	7.22	1.66	7.56	1.69
							25	5.44	1.58	6.31	1.61	6.54	1.64	6.66	1.66	6.80	1.67	7.10	1.70	7.44	1.73
							27	5.44	1.62	6.17	1.65	6.40	1.68	6.53	1.69	6.68	1.71	6.99	1.74	7.34	1.77
							29	5.44	1.66	6.03	1.69	6.28	1.72	6.41	1.74	6.56	1.75	6.89	1.78	7.25	1.81
							31	5.44	1.70	5.90	1.73	6.16	1.76	6.30	1.78	6.46	1.79	6.79	1.82	7.16	1.85
							33	5.44	1.74	5.78	1.78	6.05	1.81	6.20	1.82	6.36	1.84	6.70	1.86	7.09	1.89
							35	5.44	1.79	5.67	1.82	5.95	1.85	6.15	1.86	6.27	1.88	6.62	1.91	7.02	1.93
							37	5.44	1.83	5.57	1.86	5.86	1.89	6.02	1.91	6.19	1.92	6.55	1.95	6.96	1.98
							39	5.44	1.88	5.48	1.91	5.78	1.94	5.94	1.96	6.12	1.97	6.49	2.00	6.91	2.02
							42	5.44	1.95	5.35	1.98	5.67	2.01	5.84	2.03	6.02	2.04	6.42	2.07	6.85	2.09
							44	5.44	2.00	5.28	2.03	5.61	2.06	5.79	2.07	5.97	2.09	6.38	2.12	6.82	2.14
							46	5.44	2.05	5.22	2.08	5.56	2.11	5.74	2.12	5.93	2.14	6.35	2.17	6.80	2.19
2000	2000	2500			6500	46%	10	5.96	1.41	8.40	1.44	8.56	1.47	8.66	1.49	8.76	1.51	9.01	1.54	9.30	1.57
							12	5.96	1.44	8.17	1.48	8.34	1.51	8.45	1.53	8.56	1.54	8.81	1.57	9.11	1.61
							14	5.96	1.48	7.95	1.51	8.14	1.55	8.24	1.56	8.36	1.58	8.63	1.61	8.94	1.64
							16	5.96	1.51	7.74	1.55	7.94	1.58	8.05	1.60	8.18	1.62	8.46	1.65	8.78	1.68
							18	5.96	1.55	7.54	1.59	7.75	1.62	7.87	1.64	8.00	1.65	8.29	1.69	8.62	1.72
							20	5.96	1.59	7.35	1.63	7.57	1.66	7.69	1.68	7.83	1.69	8.13	1.72	8.48	1.75
							21	5.96	1.61	7.26	1.65	7.48	1.68	7.61	1.70	7.75	1.71	8.06	1.74	8.41	1.77
							23	5.96	1.65	7.08	1.69	7.32	1.72	7.45	1.74	7.60	1.75	7.92	1.78	8.28	1.81
							25	5.96	1.70	6.92	1.73	7.16	1.76	7.30	1.78	7.45	1.80	7.78	1.83	8.16	1.86
							27	5.96	1.74	6.76	1.77	7.02	1.81	7.16	1.82	7.32	1.84	7.66	1.87	8.05	1.90
							29	5.96	1.78	6.61	1.82	6.88	1.85	7.03	1.87	7.19	1.88	7.55	1.91	7.94	1.94
							31	5.96	1.83	6.47	1.86	6.75	1.90	6.91	1.91	7.07	1.93	7.44	1.96	7.85	1.99
							33	5.96	1.87	6.34	1.91	6.63	1.94	6.79	1.96	6.97	1.97	7.35	2.00	7.77	2.03
							35	5.96	1.92	6.22	1.96	6.52	1.99	6.74	2.00	6.87	2.02	7.26	2.05	7.69	2.08
							37	5.96	1.97	6.11	2.00	6.42	2.04	6.60	2.05	6.78	2.07	7.18	2.10	7.63	2.13
							39	5.96	2.02	6.00	2.05	6.33	2.09	6.51	2.10	6.70	2.12	7.12	2.15	7.57	2.18
							42	5.96	2.10	5.87	2.13	6.21	2.16	6.40	2.18	6.60	2.19	7.03	2.22	7.51	2.25
							44	5.96	2.15	5.79	2.18	6.15	2.21	6.34	2.23	6.55	2.25	6.99	2.28	7.48	2.30
							46	5.96	2.20	5.72	2.24	6.09	2.27	6.29	2.28	6.50	2.30	6.95	2.33	7.45	2.36

12. Capacity Table

12-6. AJ125TXJ5KH/EA

COOLING

Combination (Capacity Index)					Combination (Total)	Combination (%)	Outdoor Temperature (°C,DB)	Indoor Temperature (°F, WB)													
								14		16		18		19		20		22		24	
								TC(kW)	PI(kW)	TC(kW)	PI(kW)	TC(kW)	PI(kW)	TC(kW)	PI(kW)	TC(kW)	PI(kW)	TC(kW)	PI(kW)	TC(kW)	PI(kW)
2000	2000	3500			7500	54%	10	6.73	1.56	9.50	1.60	9.68	1.64	9.79	1.66	9.91	1.67	10.18	1.71	10.51	1.74
							12	6.73	1.60	9.24	1.64	9.43	1.68	9.55	1.69	9.68	1.71	9.97	1.75	10.30	1.78
							14	6.73	1.64	8.99	1.68	9.20	1.72	9.32	1.73	9.45	1.75	9.76	1.79	10.11	1.82
							16	6.73	1.68	8.76	1.72	8.97	1.76	9.10	1.78	9.24	1.79	9.56	1.83	9.92	1.86
							18	6.73	1.72	8.53	1.76	8.76	1.80	8.90	1.82	9.04	1.84	9.37	1.87	9.75	1.90
							20	6.73	1.77	8.31	1.81	8.56	1.84	8.70	1.86	8.85	1.88	9.20	1.91	9.59	1.95
							21	6.73	1.79	8.21	1.83	8.46	1.87	8.61	1.88	8.76	1.90	9.11	1.94	9.51	1.97
							23	6.73	1.84	8.01	1.87	8.27	1.91	8.42	1.93	8.59	1.95	8.95	1.98	9.36	2.01
							25	6.73	1.88	7.82	1.92	8.10	1.96	8.25	1.98	8.42	1.99	8.80	2.03	9.22	2.06
							27	6.73	1.93	7.64	1.97	7.93	2.01	8.10	2.02	8.27	2.04	8.66	2.07	9.10	2.11
							29	6.73	1.98	7.47	2.02	7.78	2.05	7.95	2.07	8.13	2.09	8.53	2.12	8.98	2.16
							31	6.73	2.03	7.31	2.07	7.63	2.10	7.81	2.12	8.00	2.14	8.41	2.17	8.88	2.21
							33	6.73	2.08	7.17	2.12	7.50	2.16	7.68	2.17	7.88	2.19	8.31	2.22	8.78	2.26
							35	6.73	2.13	7.03	2.17	7.37	2.21	7.62	2.22	7.77	2.24	8.21	2.28	8.70	2.31
							37	6.73	2.19	6.90	2.23	7.26	2.26	7.46	2.28	7.67	2.30	8.12	2.33	8.62	2.36
							39	6.73	2.24	6.79	2.28	7.16	2.32	7.36	2.33	7.58	2.35	8.05	2.38	8.56	2.42
							42	6.73	2.33	6.63	2.36	7.02	2.40	7.24	2.42	7.46	2.43	7.95	2.47	8.49	2.50
							44	6.73	2.39	6.55	2.42	6.95	2.46	7.17	2.48	7.40	2.49	7.90	2.53	8.45	2.56
							46	6.73	2.45	6.47	2.48	6.88	2.52	7.11	2.53	7.35	2.55	7.86	2.58	8.43	2.62
2000	2000	5000			9000	64%	10	8.29	1.93	11.69	1.98	11.91	2.03	12.05	2.05	12.20	2.07	12.54	2.12	12.94	2.16
							12	8.29	1.98	11.38	2.03	11.61	2.08	11.75	2.10	11.91	2.12	12.27	2.17	12.68	2.21
							14	8.29	2.03	11.07	2.08	11.32	2.13	11.47	2.15	11.64	2.17	12.01	2.21	12.44	2.26
							16	8.29	2.08	10.78	2.13	11.05	2.18	11.21	2.20	11.38	2.22	11.77	2.27	12.22	2.31
							18	8.29	2.13	10.50	2.18	10.78	2.23	10.95	2.25	11.13	2.27	11.54	2.32	12.00	2.36
							20	8.29	2.19	10.23	2.24	10.54	2.28	10.71	2.31	10.90	2.33	11.32	2.37	11.80	2.41
							21	8.29	2.22	10.10	2.26	10.42	2.31	10.59	2.33	10.79	2.36	11.22	2.40	11.71	2.44
							23	8.29	2.27	9.86	2.32	10.18	2.37	10.37	2.39	10.57	2.41	11.02	2.45	11.52	2.50
							25	8.29	2.33	9.62	2.38	9.97	2.42	10.16	2.45	10.37	2.47	10.83	2.51	11.36	2.55
							27	8.29	2.39	9.40	2.44	9.76	2.48	9.97	2.51	10.18	2.53	10.66	2.57	11.20	2.61
							29	8.29	2.45	9.20	2.50	9.57	2.54	9.78	2.57	10.01	2.59	10.50	2.63	11.06	2.67
							31	8.29	2.51	9.00	2.56	9.39	2.61	9.61	2.63	9.85	2.65	10.36	2.69	10.93	2.73
							33	8.29	2.58	8.82	2.62	9.23	2.67	9.46	2.69	9.70	2.71	10.22	2.76	10.81	2.80
							35	8.29	2.64	8.65	2.69	9.08	2.73	9.38	2.75	9.56	2.78	10.10	2.82	10.71	2.86
							37	8.29	2.71	8.50	2.76	8.94	2.80	9.18	2.82	9.44	2.84	10.00	2.89	10.62	2.93
							39	8.29	2.78	8.36	2.82	8.81	2.87	9.06	2.89	9.33	2.91	9.90	2.95	10.54	2.99
							42	8.29	2.88	8.17	2.93	8.65	2.97	8.91	3.00	9.19	3.02	9.79	3.06	10.45	3.10
							44	8.29	2.96	8.06	3.00	8.55	3.05	8.82	3.07	9.11	3.09	9.73	3.13	10.40	3.17
							46	8.29	3.03	7.96	3.07	8.47	3.12	8.75	3.14	9.05	3.16	9.68	3.20	10.37	3.24

12. Capacity Table

12-6. AJ125TXJ5KH/EA

COOLING

Combination (Capacity Index)					Combination (Total)	Combination (%)	Outdoor Temperature (°C,DB)	Indoor Temperature (°F, WB)													
								14		16		18		19		20		22		24	
								TC(kW)	PI(kW)	TC(kW)	PI(kW)	TC(kW)	PI(kW)	TC(kW)	PI(kW)	TC(kW)	PI(kW)	TC(kW)	PI(kW)	TC(kW)	PI(kW)
							10	9.84	2.57	13.89	2.64	14.15	2.70	14.31	2.73	14.48	2.76	14.89	2.82	15.37	2.87
							12	9.84	2.64	13.51	2.70	13.79	2.76	13.96	2.79	14.14	2.82	14.57	2.88	15.06	2.94
							14	9.84	2.70	13.15	2.77	13.45	2.83	13.63	2.86	13.82	2.89	14.26	2.95	14.78	3.00
							16	9.84	2.77	12.80	2.84	13.12	2.90	13.31	2.93	13.51	2.96	13.98	3.01	14.51	3.07
							18	9.84	2.84	12.47	2.91	12.81	2.97	13.01	3.00	13.22	3.03	13.70	3.08	14.25	3.14
							20	9.84	2.91	12.15	2.98	12.51	3.04	12.72	3.07	12.94	3.10	13.44	3.16	14.02	3.21
							21	9.84	2.95	12.00	3.01	12.37	3.08	12.58	3.11	12.81	3.13	13.32	3.19	13.90	3.25
							23	9.84	3.03	11.71	3.09	12.10	3.15	12.32	3.18	12.55	3.21	13.08	3.27	13.69	3.32
							25	9.84	3.10	11.43	3.17	11.84	3.23	12.07	3.26	12.32	3.29	12.87	3.34	13.49	3.40
2000	2000	6800			10800	77%	27	9.84	3.18	11.17	3.24	11.60	3.31	11.84	3.34	12.09	3.36	12.66	3.42	13.30	3.47
							29	9.84	3.26	10.92	3.33	11.37	3.39	11.62	3.42	11.88	3.44	12.47	3.50	13.13	3.55
							31	9.84	3.35	10.69	3.41	11.16	3.47	11.42	3.50	11.69	3.53	12.30	3.58	12.98	3.64
							33	9.84	3.43	10.48	3.49	10.96	3.55	11.23	3.58	11.52	3.61	12.14	3.67	12.84	3.72
							35	9.84	3.52	10.28	3.58	10.78	3.64	11.14	3.66	11.35	3.70	12.00	3.75	12.72	3.81
							37	9.84	3.61	10.09	3.67	10.62	3.73	10.90	3.76	11.21	3.79	11.87	3.84	12.61	3.89
							39	9.84	3.70	9.92	3.76	10.47	3.82	10.76	3.85	11.08	3.88	11.76	3.93	12.52	3.98
							42	9.84	3.84	9.70	3.90	10.27	3.96	10.58	3.99	10.91	4.01	11.62	4.07	12.41	4.12
							44	9.84	3.93	9.57	3.99	10.16	4.05	10.48	4.08	10.82	4.11	11.55	4.16	12.35	4.22
							46	9.84	4.03	9.45	4.09	10.06	4.15	10.39	4.18	10.74	4.21	11.49	4.26	12.32	4.31
							10	6.48	1.49	9.14	1.53	9.31	1.56	9.41	1.58	9.53	1.60	9.80	1.63	10.11	1.67
							12	6.48	1.53	8.89	1.56	9.07	1.60	9.19	1.62	9.31	1.64	9.59	1.67	9.91	1.70
							14	6.48	1.57	8.65	1.60	8.85	1.64	8.97	1.66	9.09	1.67	9.39	1.71	9.72	1.74
							16	6.48	1.60	8.42	1.64	8.63	1.68	8.76	1.70	8.89	1.71	9.20	1.75	9.55	1.78
							18	6.48	1.65	8.20	1.68	8.43	1.72	8.56	1.74	8.70	1.75	9.02	1.79	9.38	1.82
							20	6.48	1.69	8.00	1.72	8.23	1.76	8.37	1.78	8.52	1.79	8.85	1.83	9.22	1.86
							21	6.48	1.71	7.90	1.75	8.14	1.78	8.28	1.80	8.43	1.82	8.76	1.85	9.15	1.88
							23	6.48	1.75	7.70	1.79	7.96	1.82	8.10	1.84	8.26	1.86	8.61	1.89	9.01	1.92
							25	6.48	1.80	7.52	1.83	7.79	1.87	7.94	1.89	8.10	1.90	8.47	1.94	8.87	1.97
2000	2500	2500			7000	50%	27	6.48	1.84	7.35	1.88	7.63	1.91	7.79	1.93	7.96	1.95	8.33	1.98	8.75	2.01
							29	6.48	1.89	7.19	1.93	7.48	1.96	7.64	1.98	7.82	2.00	8.21	2.03	8.64	2.06
							31	6.48	1.94	7.04	1.97	7.34	2.01	7.51	2.03	7.69	2.04	8.09	2.08	8.54	2.11
							33	6.48	1.99	6.89	2.02	7.21	2.06	7.39	2.08	7.58	2.09	7.99	2.12	8.45	2.15
							35	6.48	2.04	6.76	2.07	7.09	2.11	7.33	2.12	7.47	2.14	7.90	2.17	8.37	2.20
							37	6.48	2.09	6.64	2.13	6.98	2.16	7.17	2.18	7.38	2.19	7.81	2.22	8.30	2.26
							39	6.48	2.14	6.53	2.18	6.89	2.21	7.08	2.23	7.29	2.24	7.74	2.28	8.24	2.31
							42	6.48	2.22	6.38	2.26	6.76	2.29	6.96	2.31	7.18	2.33	7.65	2.36	8.16	2.39
							44	6.48	2.28	6.30	2.31	6.68	2.35	6.90	2.36	7.12	2.38	7.60	2.41	8.13	2.44
							46	6.48	2.33	6.22	2.37	6.62	2.40	6.84	2.42	7.07	2.44	7.56	2.47	8.10	2.50

12. Capacity Table

12-6. AJ125TXJ5KH/EA

COOLING

Combination (Capacity Index)					Combination (Total)	Combination (%)	Outdoor Temperature (°C,DB)	Indoor Temperature (°F, WB)													
								14		16		18		19		20		22		24	
								TC(kW)	PI(kW)	TC(kW)	PI(kW)	TC(kW)	PI(kW)	TC(kW)	PI(kW)	TC(kW)	PI(kW)	TC(kW)	PI(kW)	TC(kW)	PI(kW)
2000	2500	3500			8000	57%	10	7.26	1.67	10.23	1.71	10.43	1.75	10.55	1.77	10.67	1.79	10.97	1.83	11.32	1.86
							12	7.26	1.71	9.96	1.75	10.16	1.79	10.29	1.81	10.42	1.83	10.74	1.87	11.10	1.90
							14	7.26	1.75	9.69	1.79	9.91	1.83	10.04	1.85	10.19	1.87	10.51	1.91	10.89	1.94
							16	7.26	1.79	9.43	1.84	9.67	1.88	9.81	1.90	9.96	1.91	10.30	1.95	10.69	1.99
							18	7.26	1.84	9.19	1.88	9.44	1.92	9.58	1.94	9.74	1.96	10.10	2.00	10.51	2.03
							20	7.26	1.89	8.96	1.93	9.22	1.97	9.37	1.99	9.54	2.01	9.91	2.04	10.33	2.08
							21	7.26	1.91	8.84	1.95	9.12	1.99	9.27	2.01	9.44	2.03	9.82	2.07	10.25	2.10
							23	7.26	1.96	8.63	2.00	8.91	2.04	9.08	2.06	9.25	2.08	9.64	2.12	10.09	2.15
							25	7.26	2.01	8.42	2.05	8.72	2.09	8.89	2.11	9.08	2.13	9.48	2.16	9.94	2.20
							27	7.26	2.06	8.23	2.10	8.55	2.14	8.72	2.16	8.91	2.18	9.33	2.22	9.80	2.25
							29	7.26	2.11	8.05	2.15	8.38	2.19	8.56	2.21	8.76	2.23	9.19	2.27	9.68	2.30
							31	7.26	2.17	7.88	2.21	8.22	2.25	8.41	2.27	8.62	2.28	9.06	2.32	9.56	2.35
							33	7.26	2.22	7.72	2.26	8.08	2.30	8.28	2.32	8.49	2.34	8.95	2.37	9.46	2.41
							35	7.26	2.28	7.57	2.32	7.94	2.36	8.21	2.37	8.37	2.39	8.84	2.43	9.37	2.46
							37	7.26	2.34	7.44	2.38	7.82	2.41	8.04	2.43	8.26	2.45	8.75	2.49	9.29	2.52
							39	7.26	2.39	7.31	2.43	7.71	2.47	7.93	2.49	8.16	2.51	8.67	2.55	9.22	2.58
							42	7.26	2.49	7.15	2.52	7.57	2.56	7.80	2.58	8.04	2.60	8.57	2.63	9.14	2.67
							44	7.26	2.55	7.05	2.59	7.49	2.62	7.72	2.64	7.97	2.66	8.51	2.70	9.11	2.73
							46	7.26	2.61	6.97	2.65	7.42	2.69	7.66	2.71	7.92	2.72	8.47	2.76	9.08	2.79
2000	2500	5000			9500	68%	10	8.80	2.03	12.42	2.08	12.65	2.13	12.79	2.16	12.95	2.18	13.31	2.23	13.74	2.27
							12	8.80	2.08	12.08	2.13	12.33	2.18	12.48	2.21	12.65	2.23	13.03	2.28	13.47	2.32
							14	8.80	2.13	11.75	2.18	12.02	2.23	12.18	2.26	12.36	2.28	12.75	2.33	13.21	2.37
							16	8.80	2.19	11.44	2.24	11.73	2.29	11.90	2.31	12.08	2.34	12.49	2.38	12.97	2.42
							18	8.80	2.24	11.15	2.29	11.45	2.34	11.63	2.37	11.82	2.39	12.25	2.44	12.74	2.48
							20	8.80	2.30	10.87	2.35	11.19	2.40	11.37	2.42	11.57	2.45	12.02	2.49	12.53	2.54
							21	8.80	2.33	10.73	2.38	11.06	2.43	11.25	2.45	11.45	2.48	11.91	2.52	12.43	2.56
							23	8.80	2.39	10.47	2.44	10.81	2.49	11.01	2.51	11.22	2.53	11.70	2.58	12.24	2.62
							25	8.80	2.45	10.22	2.50	10.58	2.55	10.79	2.57	11.01	2.59	11.50	2.64	12.06	2.68
							27	8.80	2.51	9.99	2.56	10.37	2.61	10.58	2.63	10.81	2.66	11.32	2.70	11.89	2.74
							29	8.80	2.58	9.77	2.63	10.16	2.67	10.39	2.70	10.63	2.72	11.15	2.76	11.74	2.81
							31	8.80	2.64	9.56	2.69	9.97	2.74	10.21	2.76	10.45	2.78	11.00	2.83	11.60	2.87
							33	8.80	2.71	9.37	2.76	9.80	2.81	10.04	2.83	10.30	2.85	10.86	2.90	11.48	2.94
							35	8.80	2.78	9.19	2.83	9.64	2.87	9.96	2.89	10.15	2.92	10.73	2.96	11.37	3.01
							37	8.80	2.85	9.02	2.90	9.49	2.94	9.75	2.97	10.02	2.99	10.62	3.03	11.27	3.07
							39	8.80	2.92	8.87	2.97	9.36	3.02	9.62	3.04	9.90	3.06	10.52	3.10	11.19	3.15
							42	8.80	3.03	8.67	3.08	9.18	3.13	9.46	3.15	9.76	3.17	10.39	3.21	11.09	3.25
							44	8.80	3.11	8.56	3.15	9.08	3.20	9.37	3.22	9.67	3.24	10.33	3.29	11.05	3.33
							46	8.80	3.18	8.45	3.23	9.00	3.28	9.29	3.30	9.61	3.32	10.28	3.36	11.01	3.40

12. Capacity Table

12-6. AJ125TXJ5KH/EA

COOLING

Combination (Capacity Index)					Combination (Total)	Combination (%)	Outdoor Temperature (°C,DB)	Indoor Temperature (°F, WB)													
								14		16		18		19		20		22		24	
								TC(kW)	PI(kW)	TC(kW)	PI(kW)	TC(kW)	PI(kW)	TC(kW)	PI(kW)	TC(kW)	PI(kW)	TC(kW)	PI(kW)	TC(kW)	PI(kW)
2000	2500	6800			11300	81%	10	10.25	2.63	14.46	2.69	14.73	2.76	14.90	2.79	15.08	2.82	15.50	2.88	16.00	2.94
							12	10.25	2.69	14.07	2.76	14.36	2.82	14.54	2.85	14.73	2.89	15.17	2.94	15.69	3.00
							14	10.25	2.76	13.69	2.83	14.00	2.89	14.19	2.92	14.39	2.95	14.85	3.01	15.39	3.07
							16	10.25	2.83	13.33	2.90	13.66	2.96	13.86	2.99	14.07	3.02	14.55	3.08	15.11	3.14
							18	10.25	2.90	12.98	2.97	13.34	3.03	13.54	3.06	13.77	3.09	14.27	3.15	14.84	3.21
							20	10.25	2.98	12.65	3.04	13.03	3.11	13.24	3.14	13.48	3.17	14.00	3.22	14.59	3.28
							21	10.25	3.01	12.50	3.08	12.88	3.14	13.10	3.17	13.34	3.20	13.87	3.26	14.48	3.32
							23	10.25	3.09	12.19	3.16	12.60	3.22	12.82	3.25	13.07	3.28	13.63	3.34	14.25	3.39
							25	10.25	3.17	11.90	3.24	12.33	3.30	12.57	3.33	12.82	3.36	13.40	3.42	14.04	3.47
							27	10.25	3.25	11.63	3.32	12.07	3.38	12.32	3.41	12.59	3.44	13.18	3.50	13.85	3.55
							29	10.25	3.33	11.37	3.40	11.84	3.46	12.10	3.49	12.38	3.52	12.99	3.58	13.67	3.63
							31	10.25	3.42	11.13	3.48	11.62	3.54	11.89	3.57	12.18	3.60	12.81	3.66	13.51	3.72
							33	10.25	3.51	10.91	3.57	11.41	3.63	11.69	3.66	11.99	3.69	12.64	3.75	13.37	3.80
							35	10.25	3.59	10.70	3.66	11.23	3.72	11.60	3.74	11.82	3.78	12.50	3.83	13.24	3.89
							37	10.25	3.69	10.51	3.75	11.05	3.81	11.35	3.84	11.67	3.87	12.36	3.92	13.13	3.98
							39	10.25	3.78	10.33	3.84	10.90	3.90	11.21	3.93	11.54	3.96	12.25	4.02	13.03	4.07
							42	10.25	3.92	10.10	3.98	10.69	4.04	11.02	4.07	11.36	4.10	12.10	4.16	12.92	4.21
							44	10.25	4.02	9.96	4.08	10.58	4.14	10.91	4.17	11.27	4.20	12.03	4.25	12.87	4.31
							46	10.25	4.12	9.85	4.18	10.48	4.24	10.82	4.27	11.19	4.30	11.97	4.35	12.83	4.41
2000	3500	3500			9000	64%	10	8.03	1.92	11.33	1.97	11.55	2.01	11.68	2.04	11.82	2.06	12.15	2.10	12.54	2.14
							12	8.03	1.97	11.02	2.01	11.25	2.06	11.39	2.08	11.54	2.11	11.89	2.15	12.29	2.19
							14	8.03	2.02	10.73	2.06	10.97	2.11	11.12	2.13	11.28	2.16	11.64	2.20	12.06	2.24
							16	8.03	2.07	10.44	2.11	10.71	2.16	10.86	2.18	11.03	2.21	11.40	2.25	11.84	2.29
							18	8.03	2.12	10.17	2.17	10.45	2.21	10.61	2.24	10.79	2.26	11.18	2.30	11.63	2.34
							20	8.03	2.17	9.92	2.22	10.21	2.27	10.38	2.29	10.56	2.31	10.97	2.35	11.44	2.39
							21	8.03	2.20	9.79	2.25	10.09	2.29	10.27	2.32	10.45	2.34	10.87	2.38	11.34	2.42
							23	8.03	2.26	9.55	2.30	9.87	2.35	10.05	2.37	10.24	2.39	10.68	2.44	11.17	2.48
							25	8.03	2.31	9.33	2.36	9.66	2.41	9.85	2.43	10.05	2.45	10.50	2.49	11.00	2.53
							27	8.03	2.37	9.11	2.42	9.46	2.47	9.66	2.49	9.87	2.51	10.33	2.55	10.85	2.59
							29	8.03	2.43	8.91	2.48	9.28	2.53	9.48	2.55	9.70	2.57	10.18	2.61	10.71	2.65
							31	8.03	2.50	8.72	2.54	9.10	2.59	9.32	2.61	9.54	2.63	10.04	2.67	10.59	2.71
							33	8.03	2.56	8.55	2.61	8.94	2.65	9.16	2.67	9.40	2.69	9.91	2.74	10.48	2.78
							35	8.03	2.62	8.39	2.67	8.80	2.71	9.09	2.73	9.26	2.76	9.79	2.80	10.38	2.84
							37	8.03	2.69	8.24	2.74	8.66	2.78	8.90	2.80	9.15	2.82	9.69	2.86	10.29	2.90
							39	8.03	2.76	8.10	2.80	8.54	2.85	8.78	2.87	9.04	2.89	9.60	2.93	10.21	2.97
							42	8.03	2.86	7.91	2.91	8.38	2.95	8.63	2.97	8.90	2.99	9.49	3.04	10.12	3.07
							44	8.03	2.93	7.81	2.98	8.29	3.02	8.55	3.04	8.83	3.07	9.43	3.11	10.08	3.14
							46	8.03	3.01	7.72	3.05	8.21	3.10	8.48	3.12	8.77	3.14	9.38	3.18	10.05	3.22

12. Capacity Table

12-6. AJ125TXJ5KH/EA

COOLING

Combination (Capacity Index)					Combination (Total)	Combination (%)	Outdoor Temperature (°C,DB)	Indoor Temperature (°F, WB)													
								14		16		18		19		20		22		24	
								TC(kW)	PI(kW)	TC(kW)	PI(kW)	TC(kW)	PI(kW)	TC(kW)	PI(kW)	TC(kW)	PI(kW)	TC(kW)	PI(kW)	TC(kW)	PI(kW)
2000	3500	5000			10500	75%	10	9.58	2.38	13.51	2.44	13.77	2.50	13.92	2.53	14.09	2.56	14.49	2.61	14.95	2.66
							12	9.58	2.44	13.15	2.50	13.42	2.56	13.58	2.59	13.76	2.62	14.18	2.67	14.66	2.72
							14	9.58	2.50	12.79	2.56	13.09	2.62	13.26	2.65	13.45	2.68	13.88	2.73	14.38	2.78
							16	9.58	2.57	12.46	2.63	12.77	2.68	12.95	2.71	13.15	2.74	13.60	2.79	14.12	2.84
							18	9.58	2.63	12.13	2.69	12.46	2.75	12.65	2.78	12.86	2.80	13.33	2.86	13.87	2.91
							20	9.58	2.70	11.83	2.76	12.17	2.81	12.38	2.84	12.59	2.87	13.08	2.92	13.64	2.97
							21	9.58	2.73	11.68	2.79	12.04	2.85	12.24	2.88	12.46	2.90	12.96	2.96	13.53	3.01
							23	9.58	2.80	11.39	2.86	11.77	2.92	11.98	2.95	12.22	2.97	12.73	3.03	13.32	3.08
							25	9.58	2.87	11.12	2.93	11.52	2.99	11.74	3.02	11.98	3.04	12.52	3.10	13.12	3.15
							27	9.58	2.95	10.87	3.01	11.28	3.06	11.52	3.09	11.77	3.12	12.32	3.17	12.94	3.22
							29	9.58	3.02	10.63	3.08	11.06	3.14	11.30	3.16	11.56	3.19	12.14	3.24	12.78	3.29
							31	9.58	3.10	10.40	3.16	10.86	3.21	11.11	3.24	11.38	3.27	11.97	3.32	12.63	3.37
							33	9.58	3.18	10.19	3.24	10.67	3.29	10.93	3.32	11.21	3.34	11.81	3.40	12.49	3.45
							35	9.58	3.26	10.00	3.32	10.49	3.37	10.84	3.39	11.05	3.42	11.68	3.48	12.37	3.53
							37	9.58	3.34	9.82	3.40	10.33	3.45	10.61	3.48	10.91	3.51	11.55	3.56	12.27	3.61
							39	9.58	3.42	9.66	3.48	10.18	3.54	10.47	3.56	10.78	3.59	11.45	3.64	12.18	3.69
							42	9.58	3.55	9.44	3.61	9.99	3.67	10.30	3.69	10.62	3.72	11.31	3.77	12.07	3.82
							44	9.58	3.64	9.31	3.70	9.89	3.75	10.20	3.78	10.53	3.81	11.24	3.86	12.02	3.90
							46	9.58	3.73	9.20	3.79	9.79	3.84	10.11	3.87	10.45	3.90	11.19	3.95	11.99	3.99
2000	3500	6800			12300	88%	10	10.25	2.72	14.46	2.79	14.73	2.85	14.90	2.89	15.08	2.92	15.50	2.98	16.00	3.04
							12	10.25	2.79	14.07	2.86	14.36	2.92	14.54	2.95	14.73	2.99	15.17	3.05	15.69	3.11
							14	10.25	2.86	13.69	2.93	14.00	2.99	14.19	3.02	14.39	3.06	14.85	3.12	15.39	3.18
							16	10.25	2.93	13.33	3.00	13.66	3.06	13.86	3.10	14.07	3.13	14.55	3.19	15.11	3.25
							18	10.25	3.00	12.98	3.07	13.34	3.14	13.54	3.17	13.77	3.20	14.27	3.26	14.84	3.32
							20	10.25	3.08	12.65	3.15	13.03	3.21	13.24	3.25	13.48	3.28	14.00	3.34	14.59	3.40
							21	10.25	3.12	12.50	3.19	12.88	3.25	13.10	3.28	13.34	3.31	13.87	3.38	14.48	3.43
							23	10.25	3.20	12.19	3.27	12.60	3.33	12.82	3.36	13.07	3.39	13.63	3.45	14.25	3.51
							25	10.25	3.28	11.90	3.35	12.33	3.41	12.57	3.44	12.82	3.47	13.40	3.53	14.04	3.59
							27	10.25	3.36	11.63	3.43	12.07	3.50	12.32	3.53	12.59	3.56	13.18	3.62	13.85	3.67
							29	10.25	3.45	11.37	3.52	11.84	3.58	12.10	3.61	12.38	3.64	12.99	3.70	13.67	3.76
							31	10.25	3.54	11.13	3.60	11.62	3.67	11.89	3.70	12.18	3.73	12.81	3.79	13.51	3.85
							33	10.25	3.63	10.91	3.69	11.41	3.76	11.69	3.79	11.99	3.82	12.64	3.88	13.37	3.93
							35	10.25	3.72	10.70	3.79	11.23	3.85	11.60	3.87	11.82	3.91	12.50	3.97	13.24	4.02
							37	10.25	3.81	10.51	3.88	11.05	3.94	11.35	3.97	11.67	4.00	12.36	4.06	13.13	4.12
							39	10.25	3.91	10.33	3.97	10.90	4.04	11.21	4.07	11.54	4.10	12.25	4.16	13.03	4.21
							42	10.25	4.06	10.10	4.12	10.69	4.18	11.02	4.22	11.36	4.24	12.10	4.30	12.92	4.36
							44	10.25	4.16	9.96	4.22	10.58	4.29	10.91	4.32	11.27	4.35	12.03	4.40	12.87	4.46
							46	10.25	4.26	9.85	4.33	10.48	4.39	10.82	4.42	11.19	4.45	11.97	4.50	12.83	4.56

12. Capacity Table

12-6. AJ125TXJ5KH/EA

COOLING

Combination (Capacity Index)					Combination (Total)	Combination (%)	Outdoor Temperature (°C,DB)	Indoor Temperature (°F, WB)													
								14		16		18		19		20		22		24	
								TC(kW)	PI(kW)	TC(kW)	PI(kW)	TC(kW)	PI(kW)	TC(kW)	PI(kW)	TC(kW)	PI(kW)	TC(kW)	PI(kW)	TC(kW)	PI(kW)
2000	5000	5000			12000	86%	10	10.25	2.72	14.46	2.79	14.73	2.85	14.90	2.89	15.08	2.92	15.50	2.98	16.00	3.04
							12	10.25	2.79	14.07	2.86	14.36	2.92	14.54	2.95	14.73	2.99	15.17	3.05	15.69	3.11
							14	10.25	2.86	13.69	2.93	14.00	2.99	14.19	3.02	14.39	3.06	14.85	3.12	15.39	3.18
							16	10.25	2.93	13.33	3.00	13.66	3.06	13.86	3.10	14.07	3.13	14.55	3.19	15.11	3.25
							18	10.25	3.00	12.98	3.07	13.34	3.14	13.54	3.17	13.77	3.20	14.27	3.26	14.84	3.32
							20	10.25	3.08	12.65	3.15	13.03	3.21	13.24	3.25	13.48	3.28	14.00	3.34	14.59	3.40
							21	10.25	3.12	12.50	3.19	12.88	3.25	13.10	3.28	13.34	3.31	13.87	3.38	14.48	3.43
							23	10.25	3.20	12.19	3.27	12.60	3.33	12.82	3.36	13.07	3.39	13.63	3.45	14.25	3.51
							25	10.25	3.28	11.90	3.35	12.33	3.41	12.57	3.44	12.82	3.47	13.40	3.53	14.04	3.59
							27	10.25	3.36	11.63	3.43	12.07	3.50	12.32	3.53	12.59	3.56	13.18	3.62	13.85	3.67
							29	10.25	3.45	11.37	3.52	11.84	3.58	12.10	3.61	12.38	3.64	12.99	3.70	13.67	3.76
							31	10.25	3.54	11.13	3.60	11.62	3.67	11.89	3.70	12.18	3.73	12.81	3.79	13.51	3.85
							33	10.25	3.63	10.91	3.69	11.41	3.76	11.69	3.79	11.99	3.82	12.64	3.88	13.37	3.93
							35	10.25	3.72	10.70	3.79	11.23	3.85	11.60	3.87	11.82	3.91	12.50	3.97	13.24	4.02
							37	10.25	3.81	10.51	3.88	11.05	3.94	11.35	3.97	11.67	4.00	12.36	4.06	13.13	4.12
							39	10.25	3.91	10.33	3.97	10.90	4.04	11.21	4.07	11.54	4.10	12.25	4.16	13.03	4.21
							42	10.25	4.06	10.10	4.12	10.69	4.18	11.02	4.22	11.36	4.24	12.10	4.30	12.92	4.36
							44	10.25	4.16	9.96	4.22	10.58	4.29	10.91	4.32	11.27	4.35	12.03	4.40	12.87	4.46
							46	10.25	4.26	9.85	4.33	10.48	4.39	10.82	4.42	11.19	4.45	11.97	4.50	12.83	4.56
2000	5000	6800			13800	99%	10	13.04	2.72	13.56	2.77	14.08	2.83	14.34	2.86	14.60	2.89	15.14	2.95	15.68	3.00
							12	12.82	2.79	13.33	2.85	13.85	2.90	14.11	2.93	14.38	2.96	14.92	3.02	15.46	3.08
							14	12.59	2.86	13.10	2.92	13.63	2.98	13.89	3.01	14.16	3.04	14.69	3.10	15.24	3.16
							16	12.37	2.94	12.88	3.00	13.40	3.06	13.67	3.09	13.93	3.11	14.47	3.17	15.02	3.23
							18	12.14	3.01	12.66	3.07	13.18	3.13	13.45	3.16	13.71	3.19	14.25	3.25	14.80	3.31
							20	11.92	3.09	12.43	3.15	12.96	3.21	13.22	3.24	13.49	3.27	14.03	3.33	14.58	3.39
							21	11.80	3.13	12.32	3.19	12.85	3.25	13.11	3.28	13.38	3.31	13.92	3.37	14.47	3.43
							23	11.58	3.21	12.10	3.27	12.63	3.33	12.89	3.36	13.16	3.39	13.70	3.45	14.25	3.51
							25	11.36	3.29	11.88	3.35	12.41	3.42	12.67	3.45	12.94	3.48	13.48	3.54	14.03	3.60
							27	11.14	3.38	11.66	3.44	12.19	3.50	12.45	3.53	12.72	3.56	13.27	3.62	13.82	3.68
							29	10.91	3.46	11.44	3.52	11.97	3.58	12.23	3.61	12.50	3.65	13.05	3.71	13.60	3.77
							31	10.69	3.55	11.22	3.61	11.75	3.67	12.01	3.70	12.28	3.73	12.83	3.79	13.38	3.86
							33	10.47	3.63	11.00	3.70	11.53	3.76	11.80	3.79	12.07	3.82	12.61	3.88	13.17	3.94
							35	10.25	3.72	10.78	3.78	11.31	3.85	11.60	3.87	11.85	3.91	12.40	3.97	12.95	4.04
							37	10.03	3.81	10.56	3.87	11.09	3.94	11.36	3.97	11.63	4.00	12.18	4.06	12.74	4.13
							39	9.81	3.90	10.34	3.97	10.88	4.03	11.15	4.06	11.42	4.09	11.97	4.16	12.52	4.22
							42	9.49	4.04	10.02	4.11	10.55	4.17	10.82	4.20	11.10	4.23	11.65	4.30	12.21	4.36
							44	9.27	4.14	9.80	4.20	10.34	4.26	10.61	4.30	10.88	4.33	11.43	4.39	11.99	4.46
							46	9.05	4.23	9.58	4.30	10.12	4.36	10.39	4.39	10.67	4.43	11.22	4.49	11.78	4.56

12. Capacity Table

12-6. AJ125TXJ5KH/EA

COOLING

Combination (Capacity Index)					Combination (Total)	Combination (%)	Outdoor Temperature (°C,DB)	Indoor Temperature (°F, WB)													
								14		16		18		19		20		22		24	
								TC(kW)	PI(kW)	TC(kW)	PI(kW)	TC(kW)	PI(kW)	TC(kW)	PI(kW)	TC(kW)	PI(kW)	TC(kW)	PI(kW)	TC(kW)	PI(kW)
2000	6800	6800			15600	111%	10	13.61	2.74	14.14	2.80	14.68	2.86	14.96	2.89	15.23	2.92	15.79	2.98	16.36	3.04
							12	13.37	2.82	13.90	2.88	14.45	2.93	14.72	2.96	15.00	2.99	15.56	3.05	16.13	3.11
							14	13.13	2.89	13.67	2.95	14.21	3.01	14.49	3.04	14.77	3.07	15.33	3.13	15.90	3.19
							16	12.90	2.97	13.44	3.03	13.98	3.09	14.26	3.12	14.53	3.15	15.10	3.21	15.67	3.27
							18	12.66	3.05	13.20	3.11	13.75	3.17	14.03	3.20	14.30	3.23	14.87	3.29	15.44	3.35
							20	12.43	3.12	12.97	3.18	13.52	3.25	13.79	3.28	14.07	3.31	14.64	3.37	15.21	3.43
							21	12.31	3.16	12.85	3.22	13.40	3.29	13.68	3.32	13.96	3.35	14.52	3.41	15.09	3.47
							23	12.08	3.25	12.62	3.31	13.17	3.37	13.45	3.40	13.73	3.43	14.29	3.49	14.87	3.55
							25	11.85	3.33	12.39	3.39	12.94	3.45	13.22	3.48	13.50	3.51	14.06	3.57	14.64	3.63
							27	11.62	3.41	12.16	3.47	12.71	3.54	12.99	3.57	13.27	3.60	13.84	3.66	14.41	3.72
							29	11.39	3.50	11.93	3.56	12.48	3.62	12.76	3.65	13.04	3.68	13.61	3.75	14.19	3.81
							31	11.15	3.58	11.70	3.65	12.25	3.71	12.53	3.74	12.81	3.77	13.38	3.83	13.96	3.90
							33	10.92	3.67	11.47	3.73	12.02	3.80	12.30	3.83	12.59	3.86	13.16	3.92	13.74	3.99
							35	10.70	3.76	11.24	3.82	11.80	3.89	12.10	3.91	12.36	3.95	12.93	4.01	13.51	4.08
							37	10.47	3.85	11.01	3.91	11.57	3.98	11.85	4.01	12.14	4.04	12.71	4.11	13.29	4.17
							39	10.24	3.94	10.79	4.01	11.34	4.07	11.63	4.10	11.91	4.13	12.48	4.20	13.06	4.26
							42	9.90	4.08	10.45	4.15	11.01	4.21	11.29	4.24	11.57	4.28	12.15	4.34	12.73	4.41
							44	9.67	4.18	10.22	4.24	10.78	4.31	11.06	4.34	11.35	4.37	11.93	4.44	12.51	4.50
							46	9.44	4.27	10.00	4.34	10.56	4.41	10.84	4.44	11.13	4.47	11.70	4.54	12.29	4.60
2500	2500	2500			7500	54%	10	6.99	1.56	9.86	1.60	10.05	1.64	10.16	1.66	10.28	1.67	10.57	1.71	10.91	1.74
							12	6.99	1.60	9.59	1.64	9.79	1.68	9.91	1.69	10.04	1.71	10.34	1.75	10.70	1.78
							14	6.99	1.64	9.34	1.68	9.55	1.72	9.68	1.73	9.81	1.75	10.13	1.79	10.49	1.82
							16	6.99	1.68	9.09	1.72	9.32	1.76	9.45	1.78	9.59	1.79	9.92	1.83	10.30	1.86
							18	6.99	1.72	8.85	1.76	9.09	1.80	9.23	1.82	9.39	1.84	9.73	1.87	10.12	1.90
							20	6.99	1.77	8.63	1.81	8.88	1.84	9.03	1.86	9.19	1.88	9.55	1.91	9.95	1.95
							21	6.99	1.79	8.52	1.83	8.78	1.87	8.93	1.88	9.10	1.90	9.46	1.94	9.87	1.97
							23	6.99	1.84	8.31	1.87	8.59	1.91	8.75	1.93	8.91	1.95	9.29	1.98	9.72	2.01
							25	6.99	1.88	8.12	1.92	8.41	1.96	8.57	1.98	8.74	1.99	9.13	2.03	9.58	2.06
							27	6.99	1.93	7.93	1.97	8.23	2.01	8.40	2.02	8.59	2.04	8.99	2.07	9.44	2.11
							29	6.99	1.98	7.76	2.02	8.07	2.05	8.25	2.07	8.44	2.09	8.86	2.12	9.32	2.16
							31	6.99	2.03	7.59	2.07	7.92	2.10	8.11	2.12	8.30	2.14	8.73	2.17	9.21	2.21
							33	6.99	2.08	7.44	2.12	7.78	2.16	7.97	2.17	8.18	2.19	8.62	2.22	9.12	2.26
							35	6.99	2.13	7.30	2.17	7.65	2.21	7.91	2.22	8.06	2.24	8.52	2.28	9.03	2.31
							37	6.99	2.19	7.17	2.23	7.54	2.26	7.74	2.28	7.96	2.30	8.43	2.33	8.95	2.36
							39	6.99	2.24	7.05	2.28	7.43	2.32	7.64	2.33	7.87	2.35	8.35	2.38	8.89	2.42
							42	6.99	2.33	6.89	2.36	7.29	2.40	7.51	2.42	7.75	2.43	8.25	2.47	8.81	2.50
							44	6.99	2.39	6.79	2.42	7.21	2.46	7.44	2.48	7.68	2.49	8.20	2.53	8.77	2.56
							46	6.99	2.45	6.71	2.48	7.15	2.52	7.38	2.53	7.63	2.55	8.16	2.58	8.75	2.62

12. Capacity Table

12-6. AJ125TXJ5KH/EA

COOLING

Combination (Capacity Index)					Combination (Total)	Combination (%)	Outdoor Temperature (°C,DB)	Indoor Temperature (°F, WB)													
								14		16		18		19		20		22		24	
								TC(kW)	PI(kW)	TC(kW)	PI(kW)	TC(kW)	PI(kW)	TC(kW)	PI(kW)	TC(kW)	PI(kW)	TC(kW)	PI(kW)	TC(kW)	PI(kW)
2500	2500	3500			8500	61%	10	7.77	1.77	10.96	1.82	11.17	1.86	11.29	1.88	11.43	1.90	11.75	1.94	12.12	1.98
							12	7.77	1.81	10.66	1.86	10.88	1.90	11.01	1.92	11.16	1.94	11.50	1.98	11.89	2.02
							14	7.77	1.86	10.37	1.91	10.61	1.95	10.75	1.97	10.91	1.99	11.26	2.03	11.66	2.07
							16	7.77	1.91	10.10	1.95	10.35	1.99	10.50	2.02	10.66	2.04	11.03	2.08	11.45	2.11
							18	7.77	1.96	9.84	2.00	10.11	2.04	10.26	2.06	10.43	2.08	10.81	2.12	11.25	2.16
							20	7.77	2.01	9.59	2.05	9.87	2.09	10.04	2.11	10.21	2.13	10.61	2.17	11.06	2.21
							21	7.77	2.03	9.47	2.08	9.76	2.12	9.93	2.14	10.11	2.16	10.51	2.20	10.97	2.24
							23	7.77	2.08	9.24	2.13	9.54	2.17	9.72	2.19	9.91	2.21	10.32	2.25	10.80	2.29
							25	7.77	2.14	9.02	2.18	9.34	2.22	9.52	2.24	9.72	2.26	10.15	2.30	10.64	2.34
							27	7.77	2.19	8.81	2.23	9.15	2.28	9.34	2.30	9.54	2.32	9.99	2.36	10.49	2.39
							29	7.77	2.25	8.62	2.29	8.97	2.33	9.17	2.35	9.38	2.37	9.84	2.41	10.36	2.45
							31	7.77	2.30	8.44	2.35	8.80	2.39	9.01	2.41	9.23	2.43	9.70	2.47	10.24	2.50
							33	7.77	2.36	8.27	2.41	8.65	2.45	8.86	2.47	9.09	2.49	9.58	2.52	10.13	2.56
							35	7.77	2.42	8.11	2.46	8.51	2.51	8.79	2.52	8.96	2.55	9.47	2.58	10.03	2.62
							37	7.77	2.48	7.96	2.53	8.38	2.57	8.60	2.59	8.84	2.61	9.37	2.64	9.95	2.68
							39	7.77	2.55	7.83	2.59	8.26	2.63	8.49	2.65	8.74	2.67	9.28	2.71	9.88	2.74
							42	7.77	2.64	7.65	2.68	8.10	2.72	8.35	2.74	8.61	2.76	9.17	2.80	9.79	2.84
							44	7.77	2.71	7.55	2.75	8.02	2.79	8.27	2.81	8.54	2.83	9.12	2.87	9.75	2.90
							46	7.77	2.78	7.46	2.82	7.94	2.86	8.20	2.88	8.48	2.90	9.07	2.93	9.72	2.97
2500	2500	5000			10000	71%	10	9.32	2.14	13.15	2.20	13.40	2.25	13.55	2.27	13.72	2.30	14.10	2.35	14.55	2.40
							12	9.32	2.20	12.79	2.25	13.06	2.30	13.22	2.33	13.40	2.35	13.80	2.40	14.27	2.45
							14	9.32	2.25	12.45	2.31	12.74	2.36	12.90	2.38	13.09	2.41	13.51	2.46	14.00	2.50
							16	9.32	2.31	12.12	2.36	12.43	2.41	12.60	2.44	12.80	2.46	13.23	2.51	13.74	2.56
							18	9.32	2.37	11.81	2.42	12.13	2.47	12.32	2.50	12.52	2.52	12.98	2.57	13.50	2.62
							20	9.32	2.43	11.51	2.48	11.85	2.53	12.04	2.56	12.26	2.58	12.73	2.63	13.27	2.68
							21	9.32	2.46	11.37	2.51	11.71	2.56	11.91	2.59	12.13	2.61	12.61	2.66	13.17	2.71
							23	9.32	2.52	11.09	2.57	11.46	2.63	11.66	2.65	11.89	2.67	12.39	2.72	12.96	2.77
							25	9.32	2.59	10.83	2.64	11.21	2.69	11.43	2.71	11.66	2.74	12.18	2.79	12.77	2.83
							27	9.32	2.65	10.58	2.70	10.98	2.75	11.21	2.78	11.45	2.80	11.99	2.85	12.60	2.90
							29	9.32	2.72	10.34	2.77	10.77	2.82	11.00	2.85	11.26	2.87	11.81	2.92	12.44	2.96
							31	9.32	2.79	10.13	2.84	10.57	2.89	10.81	2.92	11.07	2.94	11.65	2.99	12.29	3.03
							33	9.32	2.86	9.92	2.91	10.38	2.96	10.63	2.99	10.91	3.01	11.50	3.06	12.16	3.10
							35	9.32	2.93	9.73	2.98	10.21	3.03	10.55	3.05	10.75	3.08	11.36	3.13	12.04	3.17
							37	9.32	3.01	9.56	3.06	10.05	3.11	10.33	3.13	10.61	3.15	11.24	3.20	11.94	3.24
							39	9.32	3.08	9.40	3.13	9.91	3.18	10.19	3.21	10.49	3.23	11.14	3.28	11.85	3.32
							42	9.32	3.20	9.19	3.25	9.73	3.30	10.02	3.32	10.33	3.35	11.01	3.39	11.75	3.43
							44	9.32	3.28	9.06	3.33	9.62	3.38	9.93	3.40	10.25	3.42	10.94	3.47	11.70	3.51
							46	9.32	3.36	8.95	3.41	9.53	3.46	9.84	3.48	10.17	3.51	10.89	3.55	11.66	3.59

12. Capacity Table

12-6. AJ125TXJ5KH/EA

COOLING

Combination (Capacity Index)					Combination (Total)	Combination (%)	Outdoor Temperature (°C,DB)	Indoor Temperature (°F, WB)													
								14		16		18		19		20		22		24	
								TC(kW)	PI(kW)	TC(kW)	PI(kW)	TC(kW)	PI(kW)	TC(kW)	PI(kW)	TC(kW)	PI(kW)	TC(kW)	PI(kW)	TC(kW)	PI(kW)
2500	2500	6800			11800	84%	10	10.25	2.66	14.46	2.72	14.73	2.79	14.90	2.82	15.08	2.85	15.50	2.91	16.00	2.97
							12	10.25	2.72	14.07	2.79	14.36	2.85	14.54	2.89	14.73	2.92	15.17	2.98	15.69	3.03
							14	10.25	2.79	13.69	2.86	14.00	2.92	14.19	2.95	14.39	2.98	14.85	3.04	15.39	3.10
							16	10.25	2.86	13.33	2.93	13.66	2.99	13.86	3.02	14.07	3.05	14.55	3.11	15.11	3.17
							18	10.25	2.93	12.98	3.00	13.34	3.06	13.54	3.10	13.77	3.13	14.27	3.19	14.84	3.24
							20	10.25	3.01	12.65	3.07	13.03	3.14	13.24	3.17	13.48	3.20	14.00	3.26	14.59	3.32
							21	10.25	3.05	12.50	3.11	12.88	3.18	13.10	3.21	13.34	3.24	13.87	3.30	14.48	3.35
							23	10.25	3.12	12.19	3.19	12.60	3.25	12.82	3.28	13.07	3.31	13.63	3.37	14.25	3.43
							25	10.25	3.20	11.90	3.27	12.33	3.33	12.57	3.36	12.82	3.39	13.40	3.45	14.04	3.51
							27	10.25	3.29	11.63	3.35	12.07	3.41	12.32	3.44	12.59	3.47	13.18	3.53	13.85	3.59
							29	10.25	3.37	11.37	3.43	11.84	3.50	12.10	3.53	12.38	3.56	12.99	3.62	13.67	3.67
							31	10.25	3.46	11.13	3.52	11.62	3.58	11.89	3.61	12.18	3.64	12.81	3.70	13.51	3.76
							33	10.25	3.54	10.91	3.61	11.41	3.67	11.69	3.70	11.99	3.73	12.64	3.79	13.37	3.84
							35	10.25	3.63	10.70	3.70	11.23	3.76	11.60	3.78	11.82	3.82	12.50	3.88	13.24	3.93
							37	10.25	3.73	10.51	3.79	11.05	3.85	11.35	3.88	11.67	3.91	12.36	3.97	13.13	4.02
							39	10.25	3.82	10.33	3.88	10.90	3.94	11.21	3.97	11.54	4.00	12.25	4.06	13.03	4.11
							42	10.25	3.96	10.10	4.03	10.69	4.09	11.02	4.12	11.36	4.15	12.10	4.20	12.92	4.26
							44	10.25	4.06	9.96	4.13	10.58	4.19	10.91	4.22	11.27	4.24	12.03	4.30	12.87	4.35
							46	10.25	4.16	9.85	4.23	10.48	4.29	10.82	4.32	11.19	4.34	11.97	4.40	12.83	4.45
2500	3500	3500			9500	68%	10	8.55	2.02	12.05	2.07	12.28	2.12	12.42	2.14	12.57	2.16	12.92	2.21	13.34	2.25
							12	8.55	2.07	11.73	2.12	11.97	2.17	12.12	2.19	12.28	2.21	12.65	2.26	13.08	2.30
							14	8.55	2.12	11.41	2.17	11.67	2.22	11.83	2.24	12.00	2.27	12.38	2.31	12.83	2.36
							16	8.55	2.17	11.11	2.22	11.39	2.27	11.55	2.30	11.73	2.32	12.13	2.36	12.59	2.41
							18	8.55	2.23	10.82	2.28	11.12	2.33	11.29	2.35	11.48	2.37	11.89	2.42	12.37	2.46
							20	8.55	2.28	10.55	2.33	10.86	2.38	11.04	2.41	11.23	2.43	11.67	2.47	12.17	2.52
							21	8.55	2.31	10.42	2.36	10.74	2.41	10.92	2.44	11.12	2.46	11.56	2.50	12.07	2.55
							23	8.55	2.37	10.16	2.42	10.50	2.47	10.69	2.49	10.90	2.52	11.36	2.56	11.88	2.60
							25	8.55	2.43	9.92	2.48	10.28	2.53	10.48	2.55	10.69	2.58	11.17	2.62	11.71	2.66
							27	8.55	2.50	9.70	2.54	10.07	2.59	10.27	2.62	10.50	2.64	10.99	2.68	11.55	2.72
							29	8.55	2.56	9.48	2.61	9.87	2.66	10.08	2.68	10.32	2.70	10.83	2.75	11.40	2.79
							31	8.55	2.62	9.28	2.67	9.68	2.72	9.91	2.74	10.15	2.77	10.68	2.81	11.27	2.85
							33	8.55	2.69	9.09	2.74	9.51	2.79	9.75	2.81	10.00	2.83	10.54	2.88	11.14	2.92
							35	8.55	2.76	8.92	2.81	9.36	2.85	9.67	2.87	9.86	2.90	10.42	2.94	11.04	2.98
							37	8.55	2.83	8.76	2.88	9.21	2.92	9.46	2.95	9.73	2.97	10.31	3.01	10.95	3.05
							39	8.55	2.90	8.61	2.95	9.08	2.99	9.34	3.02	9.62	3.04	10.21	3.08	10.87	3.12
							42	8.55	3.01	8.42	3.06	8.91	3.10	9.19	3.13	9.47	3.15	10.09	3.19	10.77	3.23
							44	8.55	3.08	8.31	3.13	8.82	3.18	9.10	3.20	9.39	3.22	10.03	3.26	10.72	3.31
							46	8.55	3.16	8.21	3.21	8.74	3.25	9.02	3.28	9.33	3.30	9.98	3.34	10.69	3.38

12. Capacity Table

12-6. AJ125TXJ5KH/EA

COOLING

Combination (Capacity Index)					Combination (Total)	Combination (%)	Outdoor Temperature (°C,DB)	Indoor Temperature (°F, WB)													
								14		16		18		19		20		22		24	
								TC(kW)	PI(kW)	TC(kW)	PI(kW)	TC(kW)	PI(kW)	TC(kW)	PI(kW)	TC(kW)	PI(kW)	TC(kW)	PI(kW)	TC(kW)	PI(kW)
2500	3500	5000			11000	79%	10	10.10	2.60	14.25	2.67	14.52	2.73	14.68	2.76	14.86	2.79	15.28	2.85	15.77	2.91
							12	10.10	2.66	13.86	2.73	14.15	2.79	14.32	2.82	14.51	2.85	14.95	2.91	15.46	2.97
							14	10.10	2.73	13.49	2.80	13.80	2.86	13.98	2.89	14.18	2.92	14.64	2.98	15.16	3.04
							16	10.10	2.80	13.13	2.87	13.46	2.93	13.65	2.96	13.86	2.99	14.34	3.05	14.89	3.10
							18	10.10	2.87	12.79	2.94	13.14	3.00	13.34	3.03	13.56	3.06	14.06	3.12	14.63	3.17
							20	10.10	2.95	12.47	3.01	12.84	3.07	13.05	3.10	13.28	3.13	13.79	3.19	14.38	3.25
							21	10.10	2.98	12.31	3.05	12.69	3.11	12.91	3.14	13.14	3.17	13.67	3.23	14.26	3.28
							23	10.10	3.06	12.01	3.12	12.41	3.18	12.64	3.21	12.88	3.24	13.43	3.30	14.04	3.36
							25	10.10	3.14	11.73	3.20	12.15	3.26	12.38	3.29	12.64	3.32	13.20	3.38	13.84	3.43
							27	10.10	3.22	11.46	3.28	11.90	3.34	12.14	3.37	12.41	3.40	12.99	3.46	13.65	3.51
							29	10.10	3.30	11.21	3.36	11.66	3.42	11.92	3.45	12.19	3.48	12.80	3.54	13.47	3.59
							31	10.10	3.38	10.97	3.45	11.45	3.51	11.71	3.54	12.00	3.57	12.62	3.62	13.32	3.68
							33	10.10	3.47	10.75	3.53	11.25	3.59	11.52	3.62	11.82	3.65	12.46	3.71	13.17	3.76
							35	10.10	3.56	10.54	3.62	11.06	3.68	11.43	3.70	11.65	3.74	12.31	3.79	13.05	3.85
							37	10.10	3.65	10.36	3.71	10.89	3.77	11.19	3.80	11.50	3.83	12.18	3.88	12.94	3.94
							39	10.10	3.74	10.18	3.80	10.74	3.86	11.04	3.89	11.37	3.92	12.07	3.97	12.84	4.03
							42	10.10	3.88	9.95	3.94	10.54	4.00	10.86	4.03	11.20	4.06	11.93	4.11	12.73	4.17
							44	10.10	3.98	9.82	4.04	10.42	4.10	10.75	4.13	11.10	4.15	11.85	4.21	12.68	4.26
							46	10.10	4.08	9.70	4.14	10.33	4.20	10.67	4.22	11.02	4.25	11.79	4.31	12.64	4.36
2500	3500	6800			12800	91%	10	10.25	2.72	14.46	2.79	14.73	2.85	14.90	2.89	15.08	2.92	15.50	2.98	16.00	3.04
							12	10.25	2.79	14.07	2.86	14.36	2.92	14.54	2.95	14.73	2.99	15.17	3.05	15.69	3.11
							14	10.25	2.86	13.69	2.93	14.00	2.99	14.19	3.02	14.39	3.06	14.85	3.12	15.39	3.18
							16	10.25	2.93	13.33	3.00	13.66	3.06	13.86	3.10	14.07	3.13	14.55	3.19	15.11	3.25
							18	10.25	3.00	12.98	3.07	13.34	3.14	13.54	3.17	13.77	3.20	14.27	3.26	14.84	3.32
							20	10.25	3.08	12.65	3.15	13.03	3.21	13.24	3.25	13.48	3.28	14.00	3.34	14.59	3.40
							21	10.25	3.12	12.50	3.19	12.88	3.25	13.10	3.28	13.34	3.31	13.87	3.38	14.48	3.43
							23	10.25	3.20	12.19	3.27	12.60	3.33	12.82	3.36	13.07	3.39	13.63	3.45	14.25	3.51
							25	10.25	3.28	11.90	3.35	12.33	3.41	12.57	3.44	12.82	3.47	13.40	3.53	14.04	3.59
							27	10.25	3.36	11.63	3.43	12.07	3.50	12.32	3.53	12.59	3.56	13.18	3.62	13.85	3.67
							29	10.25	3.45	11.37	3.52	11.84	3.58	12.10	3.61	12.38	3.64	12.99	3.70	13.67	3.76
							31	10.25	3.54	11.13	3.60	11.62	3.67	11.89	3.70	12.18	3.73	12.81	3.79	13.51	3.85
							33	10.25	3.63	10.91	3.69	11.41	3.76	11.69	3.79	11.99	3.82	12.64	3.88	13.37	3.93
							35	10.25	3.72	10.70	3.79	11.23	3.85	11.60	3.87	11.82	3.91	12.50	3.97	13.24	4.02
							37	10.25	3.81	10.51	3.88	11.05	3.94	11.35	3.97	11.67	4.00	12.36	4.06	13.13	4.12
							39	10.25	3.91	10.33	3.97	10.90	4.04	11.21	4.07	11.54	4.10	12.25	4.16	13.03	4.21
							42	10.25	4.06	10.10	4.12	10.69	4.18	11.02	4.22	11.36	4.24	12.10	4.30	12.92	4.36
							44	10.25	4.16	9.96	4.22	10.58	4.29	10.91	4.32	11.27	4.35	12.03	4.40	12.87	4.46
							46	10.25	4.26	9.85	4.33	10.48	4.39	10.82	4.42	11.19	4.45	11.97	4.50	12.83	4.56

12. Capacity Table

12-6. AJ125TXJ5KH/EA

COOLING

Combination (Capacity Index)					Combination (Total)	Combination (%)	Outdoor Temperature (°C,DB)	Indoor Temperature (°F, WB)													
								14		16		18		19		20		22		24	
								TC(kW)	PI(kW)	TC(kW)	PI(kW)	TC(kW)	PI(kW)	TC(kW)	PI(kW)	TC(kW)	PI(kW)	TC(kW)	PI(kW)	TC(kW)	PI(kW)
2500	5000	5000			12500	89%	10	10.25	2.72	14.46	2.79	14.73	2.85	14.90	2.89	15.08	2.92	15.50	2.98	16.00	3.04
							12	10.25	2.79	14.07	2.86	14.36	2.92	14.54	2.95	14.73	2.99	15.17	3.05	15.69	3.11
							14	10.25	2.86	13.69	2.93	14.00	2.99	14.19	3.02	14.39	3.06	14.85	3.12	15.39	3.18
							16	10.25	2.93	13.33	3.00	13.66	3.06	13.86	3.10	14.07	3.13	14.55	3.19	15.11	3.25
							18	10.25	3.00	12.98	3.07	13.34	3.14	13.54	3.17	13.77	3.20	14.27	3.26	14.84	3.32
							20	10.25	3.08	12.65	3.15	13.03	3.21	13.24	3.25	13.48	3.28	14.00	3.34	14.59	3.40
							21	10.25	3.12	12.50	3.19	12.88	3.25	13.10	3.28	13.34	3.31	13.87	3.38	14.48	3.43
							23	10.25	3.20	12.19	3.27	12.60	3.33	12.82	3.36	13.07	3.39	13.63	3.45	14.25	3.51
							25	10.25	3.28	11.90	3.35	12.33	3.41	12.57	3.44	12.82	3.47	13.40	3.53	14.04	3.59
							27	10.25	3.36	11.63	3.43	12.07	3.50	12.32	3.53	12.59	3.56	13.18	3.62	13.85	3.67
							29	10.25	3.45	11.37	3.52	11.84	3.58	12.10	3.61	12.38	3.64	12.99	3.70	13.67	3.76
							31	10.25	3.54	11.13	3.60	11.62	3.67	11.89	3.70	12.18	3.73	12.81	3.79	13.51	3.85
							33	10.25	3.63	10.91	3.69	11.41	3.76	11.69	3.79	11.99	3.82	12.64	3.88	13.37	3.93
							35	10.25	3.72	10.70	3.79	11.23	3.85	11.60	3.87	11.82	3.91	12.50	3.97	13.24	4.02
							37	10.25	3.81	10.51	3.88	11.05	3.94	11.35	3.97	11.67	4.00	12.36	4.06	13.13	4.12
							39	10.25	3.91	10.33	3.97	10.90	4.04	11.21	4.07	11.54	4.10	12.25	4.16	13.03	4.21
							42	10.25	4.06	10.10	4.12	10.69	4.18	11.02	4.22	11.36	4.24	12.10	4.30	12.92	4.36
							44	10.25	4.16	9.96	4.22	10.58	4.29	10.91	4.32	11.27	4.35	12.03	4.40	12.87	4.46
							46	10.25	4.26	9.85	4.33	10.48	4.39	10.82	4.42	11.19	4.45	11.97	4.50	12.83	4.56
2500	5000	6800			14300	102%	10	13.61	2.74	14.14	2.80	14.68	2.86	14.96	2.89	15.23	2.92	15.79	2.98	16.36	3.04
							12	13.37	2.82	13.90	2.88	14.45	2.93	14.72	2.96	15.00	2.99	15.56	3.05	16.13	3.11
							14	13.13	2.89	13.67	2.95	14.21	3.01	14.49	3.04	14.77	3.07	15.33	3.13	15.90	3.19
							16	12.90	2.97	13.44	3.03	13.98	3.09	14.26	3.12	14.53	3.15	15.10	3.21	15.67	3.27
							18	12.66	3.05	13.20	3.11	13.75	3.17	14.03	3.20	14.30	3.23	14.87	3.29	15.44	3.35
							20	12.43	3.12	12.97	3.18	13.52	3.25	13.79	3.28	14.07	3.31	14.64	3.37	15.21	3.43
							21	12.31	3.16	12.85	3.22	13.40	3.29	13.68	3.32	13.96	3.35	14.52	3.41	15.09	3.47
							23	12.08	3.25	12.62	3.31	13.17	3.37	13.45	3.40	13.73	3.43	14.29	3.49	14.87	3.55
							25	11.85	3.33	12.39	3.39	12.94	3.45	13.22	3.48	13.50	3.51	14.06	3.57	14.64	3.63
							27	11.62	3.41	12.16	3.47	12.71	3.54	12.99	3.57	13.27	3.60	13.84	3.66	14.41	3.72
							29	11.39	3.50	11.93	3.56	12.48	3.62	12.76	3.65	13.04	3.68	13.61	3.75	14.19	3.81
							31	11.15	3.58	11.70	3.65	12.25	3.71	12.53	3.74	12.81	3.77	13.38	3.83	13.96	3.90
							33	10.92	3.67	11.47	3.73	12.02	3.80	12.30	3.83	12.59	3.86	13.16	3.92	13.74	3.99
							35	10.70	3.76	11.24	3.82	11.80	3.89	12.10	3.91	12.36	3.95	12.93	4.01	13.51	4.08
							37	10.47	3.85	11.01	3.91	11.57	3.98	11.85	4.01	12.14	4.04	12.71	4.11	13.29	4.17
							39	10.24	3.94	10.79	4.01	11.34	4.07	11.63	4.10	11.91	4.13	12.48	4.20	13.06	4.26
							42	9.90	4.08	10.45	4.15	11.01	4.21	11.29	4.24	11.57	4.28	12.15	4.34	12.73	4.41
							44	9.67	4.18	10.22	4.24	10.78	4.31	11.06	4.34	11.35	4.37	11.93	4.44	12.51	4.50
							46	9.44	4.27	10.00	4.34	10.56	4.41	10.84	4.44	11.13	4.47	11.70	4.54	12.29	4.60

12. Capacity Table

12-6. AJ125TXJ5KH/EA

COOLING

Combination (Capacity Index)					Combination (Total)	Combination (%)	Outdoor Temperature (°C,DB)	Indoor Temperature (°F, WB)													
								14		16		18		19		20		22		24	
								TC(kW)	PI(kW)	TC(kW)	PI(kW)	TC(kW)	PI(kW)	TC(kW)	PI(kW)	TC(kW)	PI(kW)	TC(kW)	PI(kW)	TC(kW)	PI(kW)
							10	13.61	2.74	14.14	2.80	14.68	2.86	14.96	2.89	15.23	2.92	15.79	2.98	16.36	3.04
							12	13.37	2.82	13.90	2.88	14.45	2.93	14.72	2.96	15.00	2.99	15.56	3.05	16.13	3.11
							14	13.13	2.89	13.67	2.95	14.21	3.01	14.49	3.04	14.77	3.07	15.33	3.13	15.90	3.19
							16	12.90	2.97	13.44	3.03	13.98	3.09	14.26	3.12	14.53	3.15	15.10	3.21	15.67	3.27
							18	12.66	3.05	13.20	3.11	13.75	3.17	14.03	3.20	14.30	3.23	14.87	3.29	15.44	3.35
							20	12.43	3.12	12.97	3.18	13.52	3.25	13.79	3.28	14.07	3.31	14.64	3.37	15.21	3.43
							21	12.31	3.16	12.85	3.22	13.40	3.29	13.68	3.32	13.96	3.35	14.52	3.41	15.09	3.47
							23	12.08	3.25	12.62	3.31	13.17	3.37	13.45	3.40	13.73	3.43	14.29	3.49	14.87	3.55
							25	11.85	3.33	12.39	3.39	12.94	3.45	13.22	3.48	13.50	3.51	14.06	3.57	14.64	3.63
2500	6800	6800			16100	115%	27	11.62	3.41	12.16	3.47	12.71	3.54	12.99	3.57	13.27	3.60	13.84	3.66	14.41	3.72
							29	11.39	3.50	11.93	3.56	12.48	3.62	12.76	3.65	13.04	3.68	13.61	3.75	14.19	3.81
							31	11.15	3.58	11.70	3.65	12.25	3.71	12.53	3.74	12.81	3.77	13.38	3.83	13.96	3.90
							33	10.92	3.67	11.47	3.73	12.02	3.80	12.30	3.83	12.59	3.86	13.16	3.92	13.74	3.99
							35	10.70	3.76	11.24	3.82	11.80	3.89	12.10	3.91	12.36	3.95	12.93	4.01	13.51	4.08
							37	10.47	3.85	11.01	3.91	11.57	3.98	11.85	4.01	12.14	4.04	12.71	4.11	13.29	4.17
							39	10.24	3.94	10.79	4.01	11.34	4.07	11.63	4.10	11.91	4.13	12.48	4.20	13.06	4.26
							42	9.90	4.08	10.45	4.15	11.01	4.21	11.29	4.24	11.57	4.28	12.15	4.34	12.73	4.41
							44	9.67	4.18	10.22	4.24	10.78	4.31	11.06	4.34	11.35	4.37	11.93	4.44	12.51	4.50
							46	9.44	4.27	10.00	4.34	10.56	4.41	10.84	4.44	11.13	4.47	11.70	4.54	12.29	4.60
							10	9.32	2.37	13.15	2.43	13.40	2.49	13.55	2.51	13.72	2.54	14.10	2.60	14.55	2.65
							12	9.32	2.43	12.79	2.49	13.06	2.54	13.22	2.57	13.40	2.60	13.80	2.65	14.27	2.71
							14	9.32	2.49	12.45	2.55	12.74	2.61	12.90	2.63	13.09	2.66	13.51	2.71	14.00	2.77
							16	9.32	2.55	12.12	2.61	12.43	2.67	12.60	2.70	12.80	2.72	13.23	2.78	13.74	2.83
							18	9.32	2.62	11.81	2.68	12.13	2.73	12.32	2.76	12.52	2.79	12.98	2.84	13.50	2.89
							20	9.32	2.68	11.51	2.74	11.85	2.80	12.04	2.83	12.26	2.85	12.73	2.91	13.27	2.96
							21	9.32	2.72	11.37	2.78	11.71	2.83	11.91	2.86	12.13	2.89	12.61	2.94	13.17	2.99
							23	9.32	2.79	11.09	2.84	11.46	2.90	11.66	2.93	11.89	2.96	12.39	3.01	12.96	3.06
							25	9.32	2.86	10.83	2.92	11.21	2.97	11.43	3.00	11.66	3.03	12.18	3.08	12.77	3.13
3500	3500	3500			10500	75%	27	9.32	2.93	10.58	2.99	10.98	3.04	11.21	3.07	11.45	3.10	11.99	3.15	12.60	3.20
							29	9.32	3.00	10.34	3.06	10.77	3.12	11.00	3.15	11.26	3.17	11.81	3.22	12.44	3.27
							31	9.32	3.08	10.13	3.14	10.57	3.19	10.81	3.22	11.07	3.25	11.65	3.30	12.29	3.35
							33	9.32	3.16	9.92	3.22	10.38	3.27	10.63	3.30	10.91	3.33	11.50	3.38	12.16	3.43
							35	9.32	3.24	9.73	3.30	10.21	3.35	10.55	3.37	10.75	3.40	11.36	3.46	12.04	3.50
							37	9.32	3.32	9.56	3.38	10.05	3.43	10.33	3.46	10.61	3.49	11.24	3.54	11.94	3.59
							39	9.32	3.40	9.40	3.46	9.91	3.52	10.19	3.54	10.49	3.57	11.14	3.62	11.85	3.67
							42	9.32	3.53	9.19	3.59	9.73	3.64	10.02	3.67	10.33	3.70	11.01	3.75	11.75	3.79
							44	9.32	3.62	9.06	3.68	9.62	3.73	9.93	3.76	10.25	3.78	10.94	3.83	11.70	3.88
							46	9.32	3.71	8.95	3.77	9.53	3.82	9.84	3.85	10.17	3.87	10.89	3.92	11.66	3.97

12. Capacity Table

12-6. AJ125TXJ5KH/EA

COOLING

Combination (Capacity Index)					Combination (Total)	Combination (%)	Outdoor Temperature (°C,DB)	Indoor Temperature (°F, WB)													
								14		16		18		19		20		22		24	
								TC(kW)	PI(kW)	TC(kW)	PI(kW)	TC(kW)	PI(kW)	TC(kW)	PI(kW)	TC(kW)	PI(kW)	TC(kW)	PI(kW)	TC(kW)	PI(kW)
3500	3500	5000			12000	86%	10	10.25	2.68	14.46	2.75	14.73	2.82	14.90	2.85	15.08	2.88	15.50	2.94	16.00	3.00
							12	10.25	2.75	14.07	2.82	14.36	2.88	14.54	2.92	14.73	2.95	15.17	3.01	15.69	3.07
							14	10.25	2.82	13.69	2.89	14.00	2.95	14.19	2.98	14.39	3.02	14.85	3.08	15.39	3.13
							16	10.25	2.89	13.33	2.96	13.66	3.02	13.86	3.06	14.07	3.09	14.55	3.15	15.11	3.20
							18	10.25	2.97	12.98	3.03	13.34	3.10	13.54	3.13	13.77	3.16	14.27	3.22	14.84	3.28
							20	10.25	3.04	12.65	3.11	13.03	3.17	13.24	3.20	13.48	3.23	14.00	3.29	14.59	3.35
							21	10.25	3.08	12.50	3.15	12.88	3.21	13.10	3.24	13.34	3.27	13.87	3.33	14.48	3.39
							23	10.25	3.16	12.19	3.22	12.60	3.29	12.82	3.32	13.07	3.35	13.63	3.41	14.25	3.47
							25	10.25	3.24	11.90	3.30	12.33	3.37	12.57	3.40	12.82	3.43	13.40	3.49	14.04	3.55
							27	10.25	3.32	11.63	3.39	12.07	3.45	12.32	3.48	12.59	3.51	13.18	3.57	13.85	3.63
							29	10.25	3.41	11.37	3.47	11.84	3.53	12.10	3.57	12.38	3.60	12.99	3.65	13.67	3.71
							31	10.25	3.49	11.13	3.56	11.62	3.62	11.89	3.65	12.18	3.68	12.81	3.74	13.51	3.80
							33	10.25	3.58	10.91	3.65	11.41	3.71	11.69	3.74	11.99	3.77	12.64	3.83	13.37	3.88
							35	10.25	3.67	10.70	3.74	11.23	3.80	11.60	3.82	11.82	3.86	12.50	3.92	13.24	3.97
							37	10.25	3.76	10.51	3.83	11.05	3.89	11.35	3.92	11.67	3.95	12.36	4.01	13.13	4.06
							39	10.25	3.86	10.33	3.92	10.90	3.99	11.21	4.02	11.54	4.05	12.25	4.10	13.03	4.16
							42	10.25	4.01	10.10	4.07	10.69	4.13	11.02	4.16	11.36	4.19	12.10	4.25	12.92	4.30
							44	10.25	4.11	9.96	4.17	10.58	4.23	10.91	4.26	11.27	4.29	12.03	4.35	12.87	4.40
							46	10.25	4.21	9.85	4.27	10.48	4.33	10.82	4.36	11.19	4.39	11.97	4.45	12.83	4.50
3500	3500	6800			13800	99%	10	13.04	2.72	13.56	2.77	14.08	2.83	14.34	2.86	14.60	2.89	15.14	2.95	15.68	3.00
							12	12.82	2.79	13.33	2.85	13.85	2.90	14.11	2.93	14.38	2.96	14.92	3.02	15.46	3.08
							14	12.59	2.86	13.10	2.92	13.63	2.98	13.89	3.01	14.16	3.04	14.69	3.10	15.24	3.16
							16	12.37	2.94	12.88	3.00	13.40	3.06	13.67	3.09	13.93	3.11	14.47	3.17	15.02	3.23
							18	12.14	3.01	12.66	3.07	13.18	3.13	13.45	3.16	13.71	3.19	14.25	3.25	14.80	3.31
							20	11.92	3.09	12.43	3.15	12.96	3.21	13.22	3.24	13.49	3.27	14.03	3.33	14.58	3.39
							21	11.80	3.13	12.32	3.19	12.85	3.25	13.11	3.28	13.38	3.31	13.92	3.37	14.47	3.43
							23	11.58	3.21	12.10	3.27	12.63	3.33	12.89	3.36	13.16	3.39	13.70	3.45	14.25	3.51
							25	11.36	3.29	11.88	3.35	12.41	3.42	12.67	3.45	12.94	3.48	13.48	3.54	14.03	3.60
							27	11.14	3.38	11.66	3.44	12.19	3.50	12.45	3.53	12.72	3.56	13.27	3.62	13.82	3.68
							29	10.91	3.46	11.44	3.52	11.97	3.58	12.23	3.61	12.50	3.65	13.05	3.71	13.60	3.77
							31	10.69	3.55	11.22	3.61	11.75	3.67	12.01	3.70	12.28	3.73	12.83	3.79	13.38	3.86
							33	10.47	3.63	11.00	3.70	11.53	3.76	11.80	3.79	12.07	3.82	12.61	3.88	13.17	3.94
							35	10.25	3.72	10.78	3.78	11.31	3.85	11.60	3.87	11.85	3.91	12.40	3.97	12.95	4.04
							37	10.03	3.81	10.56	3.87	11.09	3.94	11.36	3.97	11.63	4.00	12.18	4.06	12.74	4.13
							39	9.81	3.90	10.34	3.97	10.88	4.03	11.15	4.06	11.42	4.09	11.97	4.16	12.52	4.22
							42	9.49	4.04	10.02	4.11	10.55	4.17	10.82	4.20	11.10	4.23	11.65	4.30	12.21	4.36
							44	9.27	4.14	9.80	4.20	10.34	4.26	10.61	4.30	10.88	4.33	11.43	4.39	11.99	4.46
							46	9.05	4.23	9.58	4.30	10.12	4.36	10.39	4.39	10.67	4.43	11.22	4.49	11.78	4.56

12. Capacity Table

12-6. AJ125TXJ5KH/EA

COOLING

Combination (Capacity Index)					Combination (Total)	Combination (%)	Outdoor Temperature (°C,DB)	Indoor Temperature (°F, WB)													
								14		16		18		19		20		22		24	
								TC(kW)	PI(kW)	TC(kW)	PI(kW)	TC(kW)	PI(kW)	TC(kW)	PI(kW)	TC(kW)	PI(kW)	TC(kW)	PI(kW)	TC(kW)	PI(kW)
3500	5000	5000			13500	96%	10	13.04	2.72	13.56	2.77	14.08	2.83	14.34	2.86	14.60	2.89	15.14	2.95	15.68	3.00
							12	12.82	2.79	13.33	2.85	13.85	2.90	14.11	2.93	14.38	2.96	14.92	3.02	15.46	3.08
							14	12.59	2.86	13.10	2.92	13.63	2.98	13.89	3.01	14.16	3.04	14.69	3.10	15.24	3.16
							16	12.37	2.94	12.88	3.00	13.40	3.06	13.67	3.09	13.93	3.11	14.47	3.17	15.02	3.23
							18	12.14	3.01	12.66	3.07	13.18	3.13	13.45	3.16	13.71	3.19	14.25	3.25	14.80	3.31
							20	11.92	3.09	12.43	3.15	12.96	3.21	13.22	3.24	13.49	3.27	14.03	3.33	14.58	3.39
							21	11.80	3.13	12.32	3.19	12.85	3.25	13.11	3.28	13.38	3.31	13.92	3.37	14.47	3.43
							23	11.58	3.21	12.10	3.27	12.63	3.33	12.89	3.36	13.16	3.39	13.70	3.45	14.25	3.51
							25	11.36	3.29	11.88	3.35	12.41	3.42	12.67	3.45	12.94	3.48	13.48	3.54	14.03	3.60
							27	11.14	3.38	11.66	3.44	12.19	3.50	12.45	3.53	12.72	3.56	13.27	3.62	13.82	3.68
							29	10.91	3.46	11.44	3.52	11.97	3.58	12.23	3.61	12.50	3.65	13.05	3.71	13.60	3.77
							31	10.69	3.55	11.22	3.61	11.75	3.67	12.01	3.70	12.28	3.73	12.83	3.79	13.38	3.86
							33	10.47	3.63	11.00	3.70	11.53	3.76	11.80	3.79	12.07	3.82	12.61	3.88	13.17	3.94
							35	10.25	3.72	10.78	3.78	11.31	3.85	11.60	3.87	11.85	3.91	12.40	3.97	12.95	4.04
							37	10.03	3.81	10.56	3.87	11.09	3.94	11.36	3.97	11.63	4.00	12.18	4.06	12.74	4.13
							39	9.81	3.90	10.34	3.97	10.88	4.03	11.15	4.06	11.42	4.09	11.97	4.16	12.52	4.22
							42	9.49	4.04	10.02	4.11	10.55	4.17	10.82	4.20	11.10	4.23	11.65	4.30	12.21	4.36
							44	9.27	4.14	9.80	4.20	10.34	4.26	10.61	4.30	10.88	4.33	11.43	4.39	11.99	4.46
							46	9.05	4.23	9.58	4.30	10.12	4.36	10.39	4.39	10.67	4.43	11.22	4.49	11.78	4.56
3500	5000	6800			15300	109%	10	13.61	2.74	14.14	2.80	14.68	2.86	14.96	2.89	15.23	2.92	15.79	2.98	16.36	3.04
							12	13.37	2.82	13.90	2.88	14.45	2.93	14.72	2.96	15.00	2.99	15.56	3.05	16.13	3.11
							14	13.13	2.89	13.67	2.95	14.21	3.01	14.49	3.04	14.77	3.07	15.33	3.13	15.90	3.19
							16	12.90	2.97	13.44	3.03	13.98	3.09	14.26	3.12	14.53	3.15	15.10	3.21	15.67	3.27
							18	12.66	3.05	13.20	3.11	13.75	3.17	14.03	3.20	14.30	3.23	14.87	3.29	15.44	3.35
							20	12.43	3.12	12.97	3.18	13.52	3.25	13.79	3.28	14.07	3.31	14.64	3.37	15.21	3.43
							21	12.31	3.16	12.85	3.22	13.40	3.29	13.68	3.32	13.96	3.35	14.52	3.41	15.09	3.47
							23	12.08	3.25	12.62	3.31	13.17	3.37	13.45	3.40	13.73	3.43	14.29	3.49	14.87	3.55
							25	11.85	3.33	12.39	3.39	12.94	3.45	13.22	3.48	13.50	3.51	14.06	3.57	14.64	3.63
							27	11.62	3.41	12.16	3.47	12.71	3.54	12.99	3.57	13.27	3.60	13.84	3.66	14.41	3.72
							29	11.39	3.50	11.93	3.56	12.48	3.62	12.76	3.65	13.04	3.68	13.61	3.75	14.19	3.81
							31	11.15	3.58	11.70	3.65	12.25	3.71	12.53	3.74	12.81	3.77	13.38	3.83	13.96	3.90
							33	10.92	3.67	11.47	3.73	12.02	3.80	12.30	3.83	12.59	3.86	13.16	3.92	13.74	3.99
							35	10.70	3.76	11.24	3.82	11.80	3.89	12.10	3.91	12.36	3.95	12.93	4.01	13.51	4.08
							37	10.47	3.85	11.01	3.91	11.57	3.98	11.85	4.01	12.14	4.04	12.71	4.11	13.29	4.17
							39	10.24	3.94	10.79	4.01	11.34	4.07	11.63	4.10	11.91	4.13	12.48	4.20	13.06	4.26
							42	9.90	4.08	10.45	4.15	11.01	4.21	11.29	4.24	11.57	4.28	12.15	4.34	12.73	4.41
							44	9.67	4.18	10.22	4.24	10.78	4.31	11.06	4.34	11.35	4.37	11.93	4.44	12.51	4.50
							46	9.44	4.27	10.00	4.34	10.56	4.41	10.84	4.44	11.13	4.47	11.70	4.54	12.29	4.60

12. Capacity Table

12-6. AJ125TXJ5KH/EA

COOLING

Combination (Capacity Index)					Combination (Total)	Combination (%)	Outdoor Temperature (°C,DB)	Indoor Temperature (°F, WB)													
								14		16		18		19		20		22		24	
								TC(kW)	PI(kW)	TC(kW)	PI(kW)	TC(kW)	PI(kW)	TC(kW)	PI(kW)	TC(kW)	PI(kW)	TC(kW)	PI(kW)	TC(kW)	PI(kW)
3500	6800	6800			17100	122%	10	13.61	2.74	14.14	2.80	14.68	2.86	14.96	2.89	15.23	2.92	15.79	2.98	16.36	3.04
							12	13.37	2.82	13.90	2.88	14.45	2.93	14.72	2.96	15.00	2.99	15.56	3.05	16.13	3.11
							14	13.13	2.89	13.67	2.95	14.21	3.01	14.49	3.04	14.77	3.07	15.33	3.13	15.90	3.19
							16	12.90	2.97	13.44	3.03	13.98	3.09	14.26	3.12	14.53	3.15	15.10	3.21	15.67	3.27
							18	12.66	3.05	13.20	3.11	13.75	3.17	14.03	3.20	14.30	3.23	14.87	3.29	15.44	3.35
							20	12.43	3.12	12.97	3.18	13.52	3.25	13.79	3.28	14.07	3.31	14.64	3.37	15.21	3.43
							21	12.31	3.16	12.85	3.22	13.40	3.29	13.68	3.32	13.96	3.35	14.52	3.41	15.09	3.47
							23	12.08	3.25	12.62	3.31	13.17	3.37	13.45	3.40	13.73	3.43	14.29	3.49	14.87	3.55
							25	11.85	3.33	12.39	3.39	12.94	3.45	13.22	3.48	13.50	3.51	14.06	3.57	14.64	3.63
							27	11.62	3.41	12.16	3.47	12.71	3.54	12.99	3.57	13.27	3.60	13.84	3.66	14.41	3.72
							29	11.39	3.50	11.93	3.56	12.48	3.62	12.76	3.65	13.04	3.68	13.61	3.75	14.19	3.81
							31	11.15	3.58	11.70	3.65	12.25	3.71	12.53	3.74	12.81	3.77	13.38	3.83	13.96	3.90
							33	10.92	3.67	11.47	3.73	12.02	3.80	12.30	3.83	12.59	3.86	13.16	3.92	13.74	3.99
							35	10.70	3.76	11.24	3.82	11.80	3.89	12.10	3.91	12.36	3.95	12.93	4.01	13.51	4.08
							37	10.47	3.85	11.01	3.91	11.57	3.98	11.85	4.01	12.14	4.04	12.71	4.11	13.29	4.17
							39	10.24	3.94	10.79	4.01	11.34	4.07	11.63	4.10	11.91	4.13	12.48	4.20	13.06	4.26
							42	9.90	4.08	10.45	4.15	11.01	4.21	11.29	4.24	11.57	4.28	12.15	4.34	12.73	4.41
							44	9.67	4.18	10.22	4.24	10.78	4.31	11.06	4.34	11.35	4.37	11.93	4.44	12.51	4.50
							46	9.44	4.27	10.00	4.34	10.56	4.41	10.84	4.44	11.13	4.47	11.70	4.54	12.29	4.60
5000	5000	5000			15000	107%	10	13.61	2.74	14.14	2.80	14.68	2.86	14.96	2.89	15.23	2.92	15.79	2.98	16.36	3.04
							12	13.37	2.82	13.90	2.88	14.45	2.93	14.72	2.96	15.00	2.99	15.56	3.05	16.13	3.11
							14	13.13	2.89	13.67	2.95	14.21	3.01	14.49	3.04	14.77	3.07	15.33	3.13	15.90	3.19
							16	12.90	2.97	13.44	3.03	13.98	3.09	14.26	3.12	14.53	3.15	15.10	3.21	15.67	3.27
							18	12.66	3.05	13.20	3.11	13.75	3.17	14.03	3.20	14.30	3.23	14.87	3.29	15.44	3.35
							20	12.43	3.12	12.97	3.18	13.52	3.25	13.79	3.28	14.07	3.31	14.64	3.37	15.21	3.43
							21	12.31	3.16	12.85	3.22	13.40	3.29	13.68	3.32	13.96	3.35	14.52	3.41	15.09	3.47
							23	12.08	3.25	12.62	3.31	13.17	3.37	13.45	3.40	13.73	3.43	14.29	3.49	14.87	3.55
							25	11.85	3.33	12.39	3.39	12.94	3.45	13.22	3.48	13.50	3.51	14.06	3.57	14.64	3.63
							27	11.62	3.41	12.16	3.47	12.71	3.54	12.99	3.57	13.27	3.60	13.84	3.66	14.41	3.72
							29	11.39	3.50	11.93	3.56	12.48	3.62	12.76	3.65	13.04	3.68	13.61	3.75	14.19	3.81
							31	11.15	3.58	11.70	3.65	12.25	3.71	12.53	3.74	12.81	3.77	13.38	3.83	13.96	3.90
							33	10.92	3.67	11.47	3.73	12.02	3.80	12.30	3.83	12.59	3.86	13.16	3.92	13.74	3.99
							35	10.70	3.76	11.24	3.82	11.80	3.89	12.10	3.91	12.36	3.95	12.93	4.01	13.51	4.08
							37	10.47	3.85	11.01	3.91	11.57	3.98	11.85	4.01	12.14	4.04	12.71	4.11	13.29	4.17
							39	10.24	3.94	10.79	4.01	11.34	4.07	11.63	4.10	11.91	4.13	12.48	4.20	13.06	4.26
							42	9.90	4.08	10.45	4.15	11.01	4.21	11.29	4.24	11.57	4.28	12.15	4.34	12.73	4.41
							44	9.67	4.18	10.22	4.24	10.78	4.31	11.06	4.34	11.35	4.37	11.93	4.44	12.51	4.50
							46	9.44	4.27	10.00	4.34	10.56	4.41	10.84	4.44	11.13	4.47	11.70	4.54	12.29	4.60

12. Capacity Table

12-6. AJ125TXJ5KH/EA

COOLING

Combination (Capacity Index)					Combination (Total)	Combination (%)	Outdoor Temperature (°C,DB)	Indoor Temperature (°F, WB)													
								14		16		18		19		20		22		24	
								TC(kW)	PI(kW)	TC(kW)	PI(kW)	TC(kW)	PI(kW)	TC(kW)	PI(kW)	TC(kW)	PI(kW)	TC(kW)	PI(kW)	TC(kW)	PI(kW)
							10	13.61	2.74	14.14	2.80	14.68	2.86	14.96	2.89	15.23	2.92	15.79	2.98	16.36	3.04
							12	13.37	2.82	13.90	2.88	14.45	2.93	14.72	2.96	15.00	2.99	15.56	3.05	16.13	3.11
							14	13.13	2.89	13.67	2.95	14.21	3.01	14.49	3.04	14.77	3.07	15.33	3.13	15.90	3.19
							16	12.90	2.97	13.44	3.03	13.98	3.09	14.26	3.12	14.53	3.15	15.10	3.21	15.67	3.27
							18	12.66	3.05	13.20	3.11	13.75	3.17	14.03	3.20	14.30	3.23	14.87	3.29	15.44	3.35
							20	12.43	3.12	12.97	3.18	13.52	3.25	13.79	3.28	14.07	3.31	14.64	3.37	15.21	3.43
							21	12.31	3.16	12.85	3.22	13.40	3.29	13.68	3.32	13.96	3.35	14.52	3.41	15.09	3.47
							23	12.08	3.25	12.62	3.31	13.17	3.37	13.45	3.40	13.73	3.43	14.29	3.49	14.87	3.55
							25	11.85	3.33	12.39	3.39	12.94	3.45	13.22	3.48	13.50	3.51	14.06	3.57	14.64	3.63
5000	5000	6800			16800	120%	27	11.62	3.41	12.16	3.47	12.71	3.54	12.99	3.57	13.27	3.60	13.84	3.66	14.41	3.72
							29	11.39	3.50	11.93	3.56	12.48	3.62	12.76	3.65	13.04	3.68	13.61	3.75	14.19	3.81
							31	11.15	3.58	11.70	3.65	12.25	3.71	12.53	3.74	12.81	3.77	13.38	3.83	13.96	3.90
							33	10.92	3.67	11.47	3.73	12.02	3.80	12.30	3.83	12.59	3.86	13.16	3.92	13.74	3.99
							35	10.70	3.76	11.24	3.82	11.80	3.89	12.10	3.91	12.36	3.95	12.93	4.01	13.51	4.08
							37	10.47	3.85	11.01	3.91	11.57	3.98	11.85	4.01	12.14	4.04	12.71	4.11	13.29	4.17
							39	10.24	3.94	10.79	4.01	11.34	4.07	11.63	4.10	11.91	4.13	12.48	4.20	13.06	4.26
							42	9.90	4.08	10.45	4.15	11.01	4.21	11.29	4.24	11.57	4.28	12.15	4.34	12.73	4.41
							44	9.67	4.18	10.22	4.24	10.78	4.31	11.06	4.34	11.35	4.37	11.93	4.44	12.51	4.50
							46	9.44	4.27	10.00	4.34	10.56	4.41	10.84	4.44	11.13	4.47	11.70	4.54	12.29	4.60
							10	7.26	1.83	10.23	1.87	10.43	1.92	10.55	1.94	10.67	1.96	10.97	2.00	11.32	2.04
							12	7.26	1.87	9.96	1.92	10.16	1.96	10.29	1.98	10.42	2.01	10.74	2.05	11.10	2.09
							14	7.26	1.92	9.69	1.97	9.91	2.01	10.04	2.03	10.19	2.05	10.51	2.09	10.89	2.13
							16	7.26	1.97	9.43	2.01	9.67	2.06	9.81	2.08	9.96	2.10	10.30	2.14	10.69	2.18
							18	7.26	2.02	9.19	2.06	9.44	2.11	9.58	2.13	9.74	2.15	10.10	2.19	10.51	2.23
							20	7.26	2.07	8.96	2.12	9.22	2.16	9.37	2.18	9.54	2.20	9.91	2.24	10.33	2.28
							21	7.26	2.10	8.84	2.14	9.12	2.18	9.27	2.21	9.44	2.23	9.82	2.27	10.25	2.31
							23	7.26	2.15	8.63	2.19	8.91	2.24	9.08	2.26	9.25	2.28	9.64	2.32	10.09	2.36
							25	7.26	2.20	8.42	2.25	8.72	2.29	8.89	2.31	9.08	2.33	9.48	2.37	9.94	2.41
2000	2000	2000	2000		8000	57%	27	7.26	2.26	8.23	2.31	8.55	2.35	8.72	2.37	8.91	2.39	9.33	2.43	9.80	2.47
							29	7.26	2.32	8.05	2.36	8.38	2.41	8.56	2.43	8.76	2.45	9.19	2.49	9.68	2.53
							31	7.26	2.38	7.88	2.42	8.22	2.46	8.41	2.49	8.62	2.51	9.06	2.55	9.56	2.58
							33	7.26	2.44	7.72	2.48	8.08	2.52	8.28	2.55	8.49	2.57	8.95	2.60	9.46	2.64
							35	7.26	2.50	7.57	2.54	7.94	2.59	8.21	2.60	8.37	2.63	8.84	2.67	9.37	2.70
							37	7.26	2.56	7.44	2.61	7.82	2.65	8.04	2.67	8.26	2.69	8.75	2.73	9.29	2.77
							39	7.26	2.63	7.31	2.67	7.71	2.71	7.93	2.73	8.16	2.75	8.67	2.79	9.22	2.83
							42	7.26	2.73	7.15	2.77	7.57	2.81	7.80	2.83	8.04	2.85	8.57	2.89	9.14	2.93
							44	7.26	2.79	7.05	2.84	7.49	2.88	7.72	2.90	7.97	2.92	8.51	2.96	9.11	2.99
							46	7.26	2.86	6.97	2.91	7.42	2.95	7.66	2.97	7.92	2.99	8.47	3.03	9.08	3.06

12. Capacity Table

12-6. AJ125TXJ5KH/EA

COOLING

Combination (Capacity Index)					Combination (Total)	Combination (%)	Outdoor Temperature (°C,DB)	Indoor Temperature (°F, WB)													
								14		16		18		19		20		22		24	
								TC(kW)	PI(kW)	TC(kW)	PI(kW)	TC(kW)	PI(kW)	TC(kW)	PI(kW)	TC(kW)	PI(kW)	TC(kW)	PI(kW)	TC(kW)	PI(kW)
2000	2000	2000	2500		8500	61%	10	7.77	1.94	10.96	1.99	11.17	2.04	11.29	2.06	11.43	2.08	11.75	2.13	12.12	2.17
							12	7.77	1.99	10.66	2.04	10.88	2.08	11.01	2.11	11.16	2.13	11.50	2.17	11.89	2.22
							14	7.77	2.04	10.37	2.09	10.61	2.13	10.75	2.16	10.91	2.18	11.26	2.22	11.66	2.26
							16	7.77	2.09	10.10	2.14	10.35	2.18	10.50	2.21	10.66	2.23	11.03	2.27	11.45	2.32
							18	7.77	2.14	9.84	2.19	10.11	2.24	10.26	2.26	10.43	2.28	10.81	2.33	11.25	2.37
							20	7.77	2.20	9.59	2.25	9.87	2.29	10.04	2.31	10.21	2.34	10.61	2.38	11.06	2.42
							21	7.77	2.22	9.47	2.27	9.76	2.32	9.93	2.34	10.11	2.36	10.51	2.41	10.97	2.45
							23	7.77	2.28	9.24	2.33	9.54	2.38	9.72	2.40	9.91	2.42	10.32	2.46	10.80	2.50
							25	7.77	2.34	9.02	2.39	9.34	2.43	9.52	2.46	9.72	2.48	10.15	2.52	10.64	2.56
							27	7.77	2.40	8.81	2.45	9.15	2.49	9.34	2.52	9.54	2.54	9.99	2.58	10.49	2.62
							29	7.77	2.46	8.62	2.51	8.97	2.55	9.17	2.58	9.38	2.60	9.84	2.64	10.36	2.68
							31	7.77	2.52	8.44	2.57	8.80	2.62	9.01	2.64	9.23	2.66	9.70	2.70	10.24	2.74
							33	7.77	2.59	8.27	2.63	8.65	2.68	8.86	2.70	9.09	2.72	9.58	2.77	10.13	2.81
							35	7.77	2.65	8.11	2.70	8.51	2.74	8.79	2.76	8.96	2.79	9.47	2.83	10.03	2.87
							37	7.77	2.72	7.96	2.77	8.38	2.81	8.60	2.83	8.84	2.85	9.37	2.90	9.95	2.94
							39	7.77	2.79	7.83	2.83	8.26	2.88	8.49	2.90	8.74	2.92	9.28	2.96	9.88	3.00
							42	7.77	2.89	7.65	2.94	8.10	2.98	8.35	3.01	8.61	3.03	9.17	3.07	9.79	3.11
							44	7.77	2.97	7.55	3.01	8.02	3.06	8.27	3.08	8.54	3.10	9.12	3.14	9.75	3.18
							46	7.77	3.04	7.46	3.09	7.94	3.13	8.20	3.15	8.48	3.17	9.07	3.21	9.72	3.25
2000	2000	2000	3500		9500	68%	10	8.55	2.21	12.05	2.26	12.28	2.32	12.42	2.34	12.57	2.37	12.92	2.42	13.34	2.47
							12	8.55	2.26	11.73	2.32	11.97	2.37	12.12	2.40	12.28	2.42	12.65	2.47	13.08	2.52
							14	8.55	2.32	11.41	2.37	11.67	2.43	11.83	2.45	12.00	2.48	12.38	2.53	12.83	2.58
							16	8.55	2.38	11.11	2.43	11.39	2.49	11.55	2.51	11.73	2.54	12.13	2.59	12.59	2.63
							18	8.55	2.44	10.82	2.49	11.12	2.55	11.29	2.57	11.48	2.60	11.89	2.65	12.37	2.69
							20	8.55	2.50	10.55	2.55	10.86	2.61	11.04	2.63	11.23	2.66	11.67	2.71	12.17	2.75
							21	8.55	2.53	10.42	2.59	10.74	2.64	10.92	2.66	11.12	2.69	11.56	2.74	12.07	2.79
							23	8.55	2.60	10.16	2.65	10.50	2.70	10.69	2.73	10.90	2.75	11.36	2.80	11.88	2.85
							25	8.55	2.66	9.92	2.72	10.28	2.77	10.48	2.79	10.69	2.82	11.17	2.87	11.71	2.91
							27	8.55	2.73	9.70	2.78	10.07	2.84	10.27	2.86	10.50	2.89	10.99	2.93	11.55	2.98
							29	8.55	2.80	9.48	2.85	9.87	2.91	10.08	2.93	10.32	2.96	10.83	3.00	11.40	3.05
							31	8.55	2.87	9.28	2.92	9.68	2.98	9.91	3.00	10.15	3.03	10.68	3.07	11.27	3.12
							33	8.55	2.94	9.09	3.00	9.51	3.05	9.75	3.07	10.00	3.10	10.54	3.15	11.14	3.19
							35	8.55	3.02	8.92	3.07	9.36	3.12	9.67	3.14	9.86	3.17	10.42	3.22	11.04	3.27
							37	8.55	3.09	8.76	3.15	9.21	3.20	9.46	3.22	9.73	3.25	10.31	3.30	10.95	3.34
							39	8.55	3.17	8.61	3.23	9.08	3.28	9.34	3.30	9.62	3.33	10.21	3.37	10.87	3.42
							42	8.55	3.29	8.42	3.34	8.91	3.40	9.19	3.42	9.47	3.44	10.09	3.49	10.77	3.54
							44	8.55	3.37	8.31	3.43	8.82	3.48	9.10	3.50	9.39	3.53	10.03	3.57	10.72	3.62
							46	8.55	3.46	8.21	3.51	8.74	3.56	9.02	3.58	9.33	3.61	9.98	3.66	10.69	3.70

12. Capacity Table

12-6. AJ125TXJ5KH/EA

COOLING

Combination (Capacity Index)					Combination (Total)	Combination (%)	Outdoor Temperature (°C,DB)	Indoor Temperature (°F, WB)													
								14		16		18		19		20		22		24	
								TC(kW)	PI(kW)	TC(kW)	PI(kW)	TC(kW)	PI(kW)	TC(kW)	PI(kW)	TC(kW)	PI(kW)	TC(kW)	PI(kW)	TC(kW)	PI(kW)
2000	2000	2000	5000		11000	79%	10	10.10	2.87	14.25	2.94	14.52	3.01	14.68	3.04	14.86	3.08	15.28	3.14	15.77	3.20
							12	10.10	2.94	13.86	3.01	14.15	3.08	14.32	3.11	14.51	3.15	14.95	3.21	15.46	3.28
							14	10.10	3.01	13.49	3.08	13.80	3.15	13.98	3.19	14.18	3.22	14.64	3.29	15.16	3.35
							16	10.10	3.09	13.13	3.16	13.46	3.23	13.65	3.26	13.86	3.30	14.34	3.36	14.89	3.42
							18	10.10	3.17	12.79	3.24	13.14	3.31	13.34	3.34	13.56	3.37	14.06	3.44	14.63	3.50
							20	10.10	3.25	12.47	3.32	12.84	3.39	13.05	3.42	13.28	3.45	13.79	3.52	14.38	3.58
							21	10.10	3.29	12.31	3.36	12.69	3.43	12.91	3.46	13.14	3.49	13.67	3.56	14.26	3.62
							23	10.10	3.37	12.01	3.44	12.41	3.51	12.64	3.55	12.88	3.58	13.43	3.64	14.04	3.70
							25	10.10	3.46	11.73	3.53	12.15	3.60	12.38	3.63	12.64	3.66	13.20	3.73	13.84	3.79
							27	10.10	3.55	11.46	3.62	11.90	3.69	12.14	3.72	12.41	3.75	12.99	3.81	13.65	3.87
							29	10.10	3.64	11.21	3.71	11.66	3.77	11.92	3.81	12.19	3.84	12.80	3.90	13.47	3.96
							31	10.10	3.73	10.97	3.80	11.45	3.87	11.71	3.90	12.00	3.93	12.62	3.99	13.32	4.05
							33	10.10	3.82	10.75	3.89	11.25	3.96	11.52	3.99	11.82	4.03	12.46	4.09	13.17	4.15
							35	10.10	3.92	10.54	3.99	11.06	4.06	11.43	4.08	11.65	4.12	12.31	4.18	13.05	4.24
							37	10.10	4.02	10.36	4.09	10.89	4.16	11.19	4.19	11.50	4.22	12.18	4.28	12.94	4.34
							39	10.10	4.12	10.18	4.19	10.74	4.26	11.04	4.29	11.37	4.32	12.07	4.38	12.84	4.44
							42	10.10	4.28	9.95	4.35	10.54	4.41	10.86	4.44	11.20	4.48	11.93	4.54	12.73	4.59
							44	10.10	4.38	9.82	4.45	10.42	4.52	10.75	4.55	11.10	4.58	11.85	4.64	12.68	4.70
							46	10.10	4.49	9.70	4.56	10.33	4.63	10.67	4.66	11.02	4.69	11.79	4.75	12.64	4.81
2000	2000	2000	6800		12800	91%	10	10.69	2.75	15.08	2.82	15.37	2.88	15.54	2.92	15.73	2.95	16.17	3.01	16.69	3.07
							12	10.69	2.82	14.67	2.89	14.98	2.95	15.16	2.98	15.36	3.02	15.82	3.08	16.36	3.14
							14	10.69	2.89	14.28	2.96	14.61	3.02	14.80	3.05	15.01	3.09	15.49	3.15	16.05	3.21
							16	10.69	2.96	13.90	3.03	14.25	3.10	14.45	3.13	14.68	3.16	15.18	3.22	15.76	3.28
							18	10.69	3.04	13.54	3.10	13.91	3.17	14.13	3.20	14.36	3.23	14.88	3.30	15.48	3.35
							20	10.69	3.11	13.20	3.18	13.59	3.25	13.81	3.28	14.06	3.31	14.60	3.37	15.22	3.43
							21	10.69	3.15	13.03	3.22	13.44	3.29	13.66	3.32	13.91	3.35	14.47	3.41	15.10	3.47
							23	10.69	3.23	12.72	3.30	13.14	3.37	13.38	3.40	13.64	3.43	14.21	3.49	14.87	3.55
							25	10.69	3.31	12.42	3.38	12.86	3.45	13.11	3.48	13.38	3.51	13.97	3.57	14.65	3.63
							27	10.69	3.40	12.13	3.47	12.59	3.53	12.85	3.56	13.13	3.59	13.75	3.65	14.45	3.71
							29	10.69	3.49	11.86	3.55	12.35	3.62	12.62	3.65	12.91	3.68	13.55	3.74	14.26	3.80
							31	10.69	3.57	11.61	3.64	12.12	3.71	12.40	3.74	12.70	3.77	13.36	3.83	14.10	3.89
							33	10.69	3.67	11.38	3.73	11.91	3.80	12.20	3.83	12.51	3.86	13.19	3.92	13.95	3.97
							35	10.69	3.76	11.16	3.82	11.71	3.89	12.10	3.91	12.33	3.95	13.03	4.01	13.81	4.07
							37	10.69	3.85	10.96	3.92	11.53	3.98	11.84	4.01	12.17	4.04	12.90	4.10	13.70	4.16
							39	10.69	3.95	10.78	4.02	11.37	4.08	11.69	4.11	12.03	4.14	12.78	4.20	13.60	4.26
							42	10.69	4.10	10.54	4.17	11.16	4.23	11.49	4.26	11.85	4.29	12.63	4.35	13.48	4.40
							44	10.69	4.20	10.39	4.27	11.03	4.33	11.38	4.36	11.75	4.39	12.55	4.45	13.42	4.50
							46	10.69	4.31	10.27	4.37	10.93	4.43	11.29	4.46	11.67	4.49	12.49	4.55	13.38	4.61

12. Capacity Table

12-6. AJ125TXJ5KH/EA

COOLING

Combination (Capacity Index)					Combination (Total)	Combination (%)	Outdoor Temperature (°C,DB)	Indoor Temperature (°F, WB)													
								14		16		18		19		20		22		24	
								TC(kW)	PI(kW)	TC(kW)	PI(kW)	TC(kW)	PI(kW)	TC(kW)	PI(kW)	TC(kW)	PI(kW)	TC(kW)	PI(kW)	TC(kW)	PI(kW)
2000	2000	2500	2500		9000	64%	10	8.29	2.09	11.69	2.15	11.91	2.20	12.05	2.22	12.20	2.25	12.54	2.29	12.94	2.34
							12	8.29	2.15	11.38	2.20	11.61	2.25	11.75	2.27	11.91	2.30	12.27	2.35	12.68	2.39
							14	8.29	2.20	11.07	2.25	11.32	2.30	11.47	2.33	11.64	2.35	12.01	2.40	12.44	2.45
							16	8.29	2.26	10.78	2.31	11.05	2.36	11.21	2.38	11.38	2.41	11.77	2.45	12.22	2.50
							18	8.29	2.31	10.50	2.37	10.78	2.42	10.95	2.44	11.13	2.46	11.54	2.51	12.00	2.56
							20	8.29	2.37	10.23	2.42	10.54	2.47	10.71	2.50	10.90	2.52	11.32	2.57	11.80	2.61
							21	8.29	2.40	10.10	2.45	10.42	2.50	10.59	2.53	10.79	2.55	11.22	2.60	11.71	2.64
							23	8.29	2.46	9.86	2.52	10.18	2.57	10.37	2.59	10.57	2.61	11.02	2.66	11.52	2.70
							25	8.29	2.53	9.62	2.58	9.97	2.63	10.16	2.65	10.37	2.68	10.83	2.72	11.36	2.77
							27	8.29	2.59	9.40	2.64	9.76	2.69	9.97	2.72	10.18	2.74	10.66	2.79	11.20	2.83
							29	8.29	2.66	9.20	2.71	9.57	2.76	9.78	2.78	10.01	2.80	10.50	2.85	11.06	2.89
							31	8.29	2.72	9.00	2.78	9.39	2.82	9.61	2.85	9.85	2.87	10.36	2.92	10.93	2.96
							33	8.29	2.79	8.82	2.84	9.23	2.89	9.46	2.92	9.70	2.94	10.22	2.99	10.81	3.03
							35	8.29	2.86	8.65	2.91	9.08	2.96	9.38	2.98	9.56	3.01	10.10	3.06	10.71	3.10
							37	8.29	2.94	8.50	2.99	8.94	3.04	9.18	3.06	9.44	3.08	10.00	3.13	10.62	3.17
							39	8.29	3.01	8.36	3.06	8.81	3.11	9.06	3.13	9.33	3.16	9.90	3.20	10.54	3.24
							42	8.29	3.12	8.17	3.17	8.65	3.22	8.91	3.25	9.19	3.27	9.79	3.31	10.45	3.36
							44	8.29	3.20	8.06	3.25	8.55	3.30	8.82	3.32	9.11	3.35	9.73	3.39	10.40	3.43
							46	8.29	3.28	7.96	3.33	8.47	3.38	8.75	3.40	9.05	3.42	9.68	3.47	10.37	3.51
2000	2000	2500	3500		10000	71%	10	9.07	2.32	12.79	2.38	13.03	2.43	13.18	2.46	13.34	2.49	13.71	2.54	14.15	2.59
							12	9.07	2.38	12.44	2.44	12.70	2.49	12.86	2.52	13.03	2.55	13.42	2.60	13.87	2.65
							14	9.07	2.44	12.11	2.49	12.39	2.55	12.55	2.58	12.73	2.61	13.14	2.66	13.61	2.71
							16	9.07	2.50	11.79	2.56	12.08	2.61	12.26	2.64	12.44	2.67	12.87	2.72	13.36	2.77
							18	9.07	2.56	11.48	2.62	11.80	2.68	11.98	2.70	12.18	2.73	12.62	2.78	13.13	2.83
							20	9.07	2.63	11.19	2.68	11.52	2.74	11.71	2.77	11.92	2.79	12.38	2.85	12.91	2.89
							21	9.07	2.66	11.05	2.72	11.39	2.77	11.59	2.80	11.80	2.83	12.27	2.88	12.80	2.93
							23	9.07	2.73	10.78	2.79	11.14	2.84	11.34	2.87	11.56	2.89	12.05	2.95	12.60	2.99
							25	9.07	2.80	10.53	2.85	10.90	2.91	11.11	2.94	11.34	2.96	11.85	3.01	12.42	3.06
							27	9.07	2.87	10.29	2.93	10.68	2.98	10.90	3.01	11.14	3.03	11.66	3.08	12.25	3.13
							29	9.07	2.94	10.06	3.00	10.47	3.05	10.70	3.08	10.95	3.11	11.49	3.16	12.09	3.21
							31	9.07	3.02	9.85	3.07	10.28	3.13	10.51	3.15	10.77	3.18	11.33	3.23	11.95	3.28
							33	9.07	3.09	9.65	3.15	10.09	3.20	10.34	3.23	10.61	3.26	11.18	3.31	11.82	3.35
							35	9.07	3.17	9.47	3.23	9.93	3.28	10.26	3.30	10.46	3.33	11.05	3.38	11.71	3.43
							37	9.07	3.25	9.30	3.31	9.78	3.36	10.04	3.39	10.32	3.41	10.94	3.46	11.61	3.51
							39	9.07	3.33	9.14	3.39	9.64	3.44	9.91	3.47	10.20	3.49	10.83	3.54	11.53	3.59
							42	9.07	3.46	8.93	3.52	9.46	3.57	9.75	3.59	10.05	3.62	10.71	3.67	11.43	3.72
							44	9.07	3.55	8.81	3.60	9.36	3.65	9.65	3.68	9.97	3.71	10.64	3.75	11.38	3.80
							46	9.07	3.63	8.71	3.69	9.27	3.74	9.57	3.77	9.90	3.79	10.59	3.84	11.34	3.89

12. Capacity Table

12-6. AJ125TXJ5KH/EA

COOLING

Combination (Capacity Index)					Combination (Total)	Combination (%)	Outdoor Temperature (°C,DB)	Indoor Temperature (°F, WB)													
								14		16		18		19		20		22		24	
								TC(kW)	PI(kW)	TC(kW)	PI(kW)	TC(kW)	PI(kW)	TC(kW)	PI(kW)	TC(kW)	PI(kW)	TC(kW)	PI(kW)	TC(kW)	PI(kW)
2000	2000	2500	5000		11500	82%	10	10.62	2.88	14.98	2.95	15.27	3.02	15.44	3.06	15.63	3.09	16.07	3.16	16.58	3.22
							12	10.62	2.95	14.58	3.03	14.88	3.10	15.06	3.13	15.26	3.16	15.72	3.23	16.25	3.29
							14	10.62	3.03	14.19	3.10	14.51	3.17	14.70	3.20	14.91	3.24	15.39	3.30	15.95	3.36
							16	10.62	3.10	13.81	3.18	14.16	3.25	14.36	3.28	14.58	3.31	15.08	3.38	15.66	3.44
							18	10.62	3.18	13.45	3.25	13.82	3.32	14.03	3.36	14.26	3.39	14.78	3.46	15.38	3.52
							20	10.62	3.26	13.11	3.34	13.50	3.40	13.72	3.44	13.96	3.47	14.51	3.54	15.12	3.60
							21	10.62	3.31	12.95	3.38	13.35	3.45	13.57	3.48	13.82	3.51	14.37	3.58	15.00	3.64
							23	10.62	3.39	12.63	3.46	13.05	3.53	13.29	3.56	13.55	3.60	14.12	3.66	14.77	3.72
							25	10.62	3.48	12.33	3.55	12.77	3.62	13.02	3.65	13.29	3.68	13.88	3.74	14.55	3.81
							27	10.62	3.56	12.05	3.64	12.51	3.70	12.77	3.74	13.05	3.77	13.66	3.83	14.35	3.89
							29	10.62	3.66	11.79	3.73	12.27	3.79	12.54	3.83	12.82	3.86	13.46	3.92	14.17	3.98
							31	10.62	3.75	11.54	3.82	12.04	3.89	12.32	3.92	12.62	3.95	13.27	4.01	14.00	4.07
							33	10.62	3.84	11.30	3.91	11.83	3.98	12.12	4.01	12.43	4.05	13.10	4.11	13.85	4.17
							35	10.62	3.94	11.09	4.01	11.63	4.08	12.02	4.10	12.25	4.14	12.95	4.20	13.72	4.26
							37	10.62	4.04	10.89	4.11	11.45	4.18	11.76	4.21	12.09	4.24	12.81	4.30	13.60	4.36
							39	10.62	4.14	10.71	4.21	11.29	4.28	11.61	4.31	11.95	4.34	12.69	4.40	13.51	4.46
							42	10.62	4.30	10.47	4.37	11.08	4.43	11.42	4.47	11.77	4.50	12.54	4.56	13.39	4.62
							44	10.62	4.41	10.33	4.47	10.96	4.54	11.31	4.57	11.67	4.60	12.46	4.66	13.33	4.72
							46	10.62	4.52	10.20	4.58	10.86	4.65	11.22	4.68	11.59	4.71	12.40	4.77	13.29	4.83
2000	2000	2500	6800		13300	95%	10	10.69	2.75	15.08	2.82	15.37	2.88	15.54	2.92	15.73	2.95	16.17	3.01	16.69	3.07
							12	10.69	2.82	14.67	2.89	14.98	2.95	15.16	2.98	15.36	3.02	15.82	3.08	16.36	3.14
							14	10.69	2.89	14.28	2.96	14.61	3.02	14.80	3.05	15.01	3.09	15.49	3.15	16.05	3.21
							16	10.69	2.96	13.90	3.03	14.25	3.10	14.45	3.13	14.68	3.16	15.18	3.22	15.76	3.28
							18	10.69	3.04	13.54	3.10	13.91	3.17	14.13	3.20	14.36	3.23	14.88	3.30	15.48	3.35
							20	10.69	3.11	13.20	3.18	13.59	3.25	13.81	3.28	14.06	3.31	14.60	3.37	15.22	3.43
							21	10.69	3.15	13.03	3.22	13.44	3.29	13.66	3.32	13.91	3.35	14.47	3.41	15.10	3.47
							23	10.69	3.23	12.72	3.30	13.14	3.37	13.38	3.40	13.64	3.43	14.21	3.49	14.87	3.55
							25	10.69	3.31	12.42	3.38	12.86	3.45	13.11	3.48	13.38	3.51	13.97	3.57	14.65	3.63
							27	10.69	3.40	12.13	3.47	12.59	3.53	12.85	3.56	13.13	3.59	13.75	3.65	14.45	3.71
							29	10.69	3.49	11.86	3.55	12.35	3.62	12.62	3.65	12.91	3.68	13.55	3.74	14.26	3.80
							31	10.69	3.57	11.61	3.64	12.12	3.71	12.40	3.74	12.70	3.77	13.36	3.83	14.10	3.89
							33	10.69	3.67	11.38	3.73	11.91	3.80	12.20	3.83	12.51	3.86	13.19	3.92	13.95	3.97
							35	10.69	3.76	11.16	3.82	11.71	3.89	12.10	3.91	12.33	3.95	13.03	4.01	13.81	4.07
							37	10.69	3.85	10.96	3.92	11.53	3.98	11.84	4.01	12.17	4.04	12.90	4.10	13.70	4.16
							39	10.69	3.95	10.78	4.02	11.37	4.08	11.69	4.11	12.03	4.14	12.78	4.20	13.60	4.26
							42	10.69	4.10	10.54	4.17	11.16	4.23	11.49	4.26	11.85	4.29	12.63	4.35	13.48	4.40
							44	10.69	4.20	10.39	4.27	11.03	4.33	11.38	4.36	11.75	4.39	12.55	4.45	13.42	4.50
							46	10.69	4.31	10.27	4.37	10.93	4.43	11.29	4.46	11.67	4.49	12.49	4.55	13.38	4.61

12. Capacity Table

12-6. AJ125TXJ5KH/EA

COOLING

Combination (Capacity Index)					Combination (Total)	Combination (%)	Outdoor Temperature (°C,DB)	Indoor Temperature (°F, WB)													
								14		16		18		19		20		22		24	
								TC(kW)	PI(kW)	TC(kW)	PI(kW)	TC(kW)	PI(kW)	TC(kW)	PI(kW)	TC(kW)	PI(kW)	TC(kW)	PI(kW)	TC(kW)	PI(kW)
2000	2000	3500	3500		11000	79%	10	9.84	2.85	13.89	2.92	14.15	2.99	14.31	3.03	14.48	3.06	14.89	3.13	15.37	3.19
							12	9.84	2.92	13.51	3.00	13.79	3.07	13.96	3.10	14.14	3.13	14.57	3.20	15.06	3.26
							14	9.84	3.00	13.15	3.07	13.45	3.14	13.63	3.17	13.82	3.21	14.26	3.27	14.78	3.33
							16	9.84	3.07	12.80	3.14	13.12	3.21	13.31	3.25	13.51	3.28	13.98	3.34	14.51	3.41
							18	9.84	3.15	12.47	3.22	12.81	3.29	13.01	3.32	13.22	3.36	13.70	3.42	14.25	3.48
							20	9.84	3.23	12.15	3.30	12.51	3.37	12.72	3.40	12.94	3.44	13.44	3.50	14.02	3.56
							21	9.84	3.27	12.00	3.34	12.37	3.41	12.58	3.44	12.81	3.48	13.32	3.54	13.90	3.60
							23	9.84	3.36	11.71	3.43	12.10	3.49	12.32	3.53	12.55	3.56	13.08	3.62	13.69	3.68
							25	9.84	3.44	11.43	3.51	11.84	3.58	12.07	3.61	12.32	3.65	12.87	3.71	13.49	3.77
							27	9.84	3.53	11.17	3.60	11.60	3.67	11.84	3.70	12.09	3.73	12.66	3.79	13.30	3.85
							29	9.84	3.62	10.92	3.69	11.37	3.76	11.62	3.79	11.88	3.82	12.47	3.88	13.13	3.94
							31	9.84	3.71	10.69	3.78	11.16	3.85	11.42	3.88	11.69	3.91	12.30	3.97	12.98	4.03
							33	9.84	3.81	10.48	3.88	10.96	3.94	11.23	3.97	11.52	4.01	12.14	4.07	12.84	4.13
							35	9.84	3.90	10.28	3.97	10.78	4.04	11.14	4.06	11.35	4.10	12.00	4.16	12.72	4.22
							37	9.84	4.00	10.09	4.07	10.62	4.14	10.90	4.17	11.21	4.20	11.87	4.26	12.61	4.32
							39	9.84	4.10	9.92	4.17	10.47	4.24	10.76	4.27	11.08	4.30	11.76	4.36	12.52	4.42
							42	9.84	4.26	9.70	4.32	10.27	4.39	10.58	4.42	10.91	4.45	11.62	4.51	12.41	4.57
							44	9.84	4.36	9.57	4.43	10.16	4.50	10.48	4.53	10.82	4.56	11.55	4.62	12.35	4.68
							46	9.84	4.47	9.45	4.54	10.06	4.60	10.39	4.64	10.74	4.67	11.49	4.73	12.32	4.78
2000	2000	3500	5000		12500	89%	10	10.69	2.75	15.08	2.82	15.37	2.88	15.54	2.92	15.73	2.95	16.17	3.01	16.69	3.07
							12	10.69	2.82	14.67	2.89	14.98	2.95	15.16	2.98	15.36	3.02	15.82	3.08	16.36	3.14
							14	10.69	2.89	14.28	2.96	14.61	3.02	14.80	3.05	15.01	3.09	15.49	3.15	16.05	3.21
							16	10.69	2.96	13.90	3.03	14.25	3.10	14.45	3.13	14.68	3.16	15.18	3.22	15.76	3.28
							18	10.69	3.04	13.54	3.10	13.91	3.17	14.13	3.20	14.36	3.23	14.88	3.30	15.48	3.35
							20	10.69	3.11	13.20	3.18	13.59	3.25	13.81	3.28	14.06	3.31	14.60	3.37	15.22	3.43
							21	10.69	3.15	13.03	3.22	13.44	3.29	13.66	3.32	13.91	3.35	14.47	3.41	15.10	3.47
							23	10.69	3.23	12.72	3.30	13.14	3.37	13.38	3.40	13.64	3.43	14.21	3.49	14.87	3.55
							25	10.69	3.31	12.42	3.38	12.86	3.45	13.11	3.48	13.38	3.51	13.97	3.57	14.65	3.63
							27	10.69	3.40	12.13	3.47	12.59	3.53	12.85	3.56	13.13	3.59	13.75	3.65	14.45	3.71
							29	10.69	3.49	11.86	3.55	12.35	3.62	12.62	3.65	12.91	3.68	13.55	3.74	14.26	3.80
							31	10.69	3.57	11.61	3.64	12.12	3.71	12.40	3.74	12.70	3.77	13.36	3.83	14.10	3.89
							33	10.69	3.67	11.38	3.73	11.91	3.80	12.20	3.83	12.51	3.86	13.19	3.92	13.95	3.97
							35	10.69	3.76	11.16	3.82	11.71	3.89	12.10	3.91	12.33	3.95	13.03	4.01	13.81	4.07
							37	10.69	3.85	10.96	3.92	11.53	3.98	11.84	4.01	12.17	4.04	12.90	4.10	13.70	4.16
							39	10.69	3.95	10.78	4.02	11.37	4.08	11.69	4.11	12.03	4.14	12.78	4.20	13.60	4.26
							42	10.69	4.10	10.54	4.17	11.16	4.23	11.49	4.26	11.85	4.29	12.63	4.35	13.48	4.40
							44	10.69	4.20	10.39	4.27	11.03	4.33	11.38	4.36	11.75	4.39	12.55	4.45	13.42	4.50
							46	10.69	4.31	10.27	4.37	10.93	4.43	11.29	4.46	11.67	4.49	12.49	4.55	13.38	4.61

12. Capacity Table

12-6. AJ125TXJ5KH/EA

COOLING

Combination (Capacity Index)					Combination (Total)	Combination (%)	Outdoor Temperature (°C,DB)	Indoor Temperature (°F, WB)													
								14		16		18		19		20		22		24	
								TC(kW)	PI(kW)	TC(kW)	PI(kW)	TC(kW)	PI(kW)	TC(kW)	PI(kW)	TC(kW)	PI(kW)	TC(kW)	PI(kW)	TC(kW)	PI(kW)
2000	2000	3500	6800		14300	102%	10	13.61	2.74	14.14	2.80	14.68	2.86	14.96	2.89	15.23	2.92	15.79	2.98	16.36	3.04
							12	13.37	2.82	13.90	2.88	14.45	2.93	14.72	2.96	15.00	2.99	15.56	3.05	16.13	3.11
							14	13.13	2.89	13.67	2.95	14.21	3.01	14.49	3.04	14.77	3.07	15.33	3.13	15.90	3.19
							16	12.90	2.97	13.44	3.03	13.98	3.09	14.26	3.12	14.53	3.15	15.10	3.21	15.67	3.27
							18	12.66	3.05	13.20	3.11	13.75	3.17	14.03	3.20	14.30	3.23	14.87	3.29	15.44	3.35
							20	12.43	3.12	12.97	3.18	13.52	3.25	13.79	3.28	14.07	3.31	14.64	3.37	15.21	3.43
							21	12.31	3.16	12.85	3.22	13.40	3.29	13.68	3.32	13.96	3.35	14.52	3.41	15.09	3.47
							23	12.08	3.25	12.62	3.31	13.17	3.37	13.45	3.40	13.73	3.43	14.29	3.49	14.87	3.55
							25	11.85	3.33	12.39	3.39	12.94	3.45	13.22	3.48	13.50	3.51	14.06	3.57	14.64	3.63
							27	11.62	3.41	12.16	3.47	12.71	3.54	12.99	3.57	13.27	3.60	13.84	3.66	14.41	3.72
							29	11.39	3.50	11.93	3.56	12.48	3.62	12.76	3.65	13.04	3.68	13.61	3.75	14.19	3.81
							31	11.15	3.58	11.70	3.65	12.25	3.71	12.53	3.74	12.81	3.77	13.38	3.83	13.96	3.90
							33	10.92	3.67	11.47	3.73	12.02	3.80	12.30	3.83	12.59	3.86	13.16	3.92	13.74	3.99
							35	10.70	3.76	11.24	3.82	11.80	3.89	12.10	3.91	12.36	3.95	12.93	4.01	13.51	4.08
							37	10.47	3.85	11.01	3.91	11.57	3.98	11.85	4.01	12.14	4.04	12.71	4.11	13.29	4.17
							39	10.24	3.94	10.79	4.01	11.34	4.07	11.63	4.10	11.91	4.13	12.48	4.20	13.06	4.26
							42	9.90	4.08	10.45	4.15	11.01	4.21	11.29	4.24	11.57	4.28	12.15	4.34	12.73	4.41
							44	9.67	4.18	10.22	4.24	10.78	4.31	11.06	4.34	11.35	4.37	11.93	4.44	12.51	4.50
							46	9.44	4.27	10.00	4.34	10.56	4.41	10.84	4.44	11.13	4.47	11.70	4.54	12.29	4.60
2000	2000	5000	5000		14000	100%	10	13.61	2.74	14.14	2.80	14.68	2.86	14.96	2.89	15.23	2.92	15.79	2.98	16.36	3.04
							12	13.37	2.82	13.90	2.88	14.45	2.93	14.72	2.96	15.00	2.99	15.56	3.05	16.13	3.11
							14	13.13	2.89	13.67	2.95	14.21	3.01	14.49	3.04	14.77	3.07	15.33	3.13	15.90	3.19
							16	12.90	2.97	13.44	3.03	13.98	3.09	14.26	3.12	14.53	3.15	15.10	3.21	15.67	3.27
							18	12.66	3.05	13.20	3.11	13.75	3.17	14.03	3.20	14.30	3.23	14.87	3.29	15.44	3.35
							20	12.43	3.12	12.97	3.18	13.52	3.25	13.79	3.28	14.07	3.31	14.64	3.37	15.21	3.43
							21	12.31	3.16	12.85	3.22	13.40	3.29	13.68	3.32	13.96	3.35	14.52	3.41	15.09	3.47
							23	12.08	3.25	12.62	3.31	13.17	3.37	13.45	3.40	13.73	3.43	14.29	3.49	14.87	3.55
							25	11.85	3.33	12.39	3.39	12.94	3.45	13.22	3.48	13.50	3.51	14.06	3.57	14.64	3.63
							27	11.62	3.41	12.16	3.47	12.71	3.54	12.99	3.57	13.27	3.60	13.84	3.66	14.41	3.72
							29	11.39	3.50	11.93	3.56	12.48	3.62	12.76	3.65	13.04	3.68	13.61	3.75	14.19	3.81
							31	11.15	3.58	11.70	3.65	12.25	3.71	12.53	3.74	12.81	3.77	13.38	3.83	13.96	3.90
							33	10.92	3.67	11.47	3.73	12.02	3.80	12.30	3.83	12.59	3.86	13.16	3.92	13.74	3.99
							35	10.70	3.76	11.24	3.82	11.80	3.89	12.10	3.91	12.36	3.95	12.93	4.01	13.51	4.08
							37	10.47	3.85	11.01	3.91	11.57	3.98	11.85	4.01	12.14	4.04	12.71	4.11	13.29	4.17
							39	10.24	3.94	10.79	4.01	11.34	4.07	11.63	4.10	11.91	4.13	12.48	4.20	13.06	4.26
							42	9.90	4.08	10.45	4.15	11.01	4.21	11.29	4.24	11.57	4.28	12.15	4.34	12.73	4.41
							44	9.67	4.18	10.22	4.24	10.78	4.31	11.06	4.34	11.35	4.37	11.93	4.44	12.51	4.50
							46	9.44	4.27	10.00	4.34	10.56	4.41	10.84	4.44	11.13	4.47	11.70	4.54	12.29	4.60

12. Capacity Table

12-6. AJ125TXJ5KH/EA

COOLING

Combination (Capacity Index)					Combination (Total)	Combination (%)	Outdoor Temperature (°C,DB)	Indoor Temperature (°F, WB)													
								14		16		18		19		20		22		24	
								TC(kW)	PI(kW)	TC(kW)	PI(kW)	TC(kW)	PI(kW)	TC(kW)	PI(kW)	TC(kW)	PI(kW)	TC(kW)	PI(kW)	TC(kW)	PI(kW)
2000	2000	5000	6800		15800	113%	10	14.05	2.77	14.61	2.83	15.17	2.89	15.45	2.92	15.74	2.95	16.31	3.01	16.90	3.07
							12	13.81	2.85	14.36	2.91	14.93	2.96	15.21	2.99	15.50	3.02	16.07	3.08	16.66	3.14
							14	13.57	2.92	14.12	2.98	14.68	3.04	14.97	3.07	15.25	3.10	15.83	3.16	16.42	3.22
							16	13.32	3.00	13.88	3.06	14.44	3.12	14.73	3.15	15.02	3.18	15.60	3.24	16.18	3.30
							18	13.08	3.08	13.64	3.14	14.20	3.20	14.49	3.23	14.78	3.26	15.36	3.32	15.95	3.38
							20	12.84	3.16	13.40	3.22	13.96	3.28	14.25	3.31	14.54	3.34	15.12	3.40	15.71	3.46
							21	12.72	3.20	13.28	3.26	13.84	3.32	14.13	3.35	14.42	3.38	15.00	3.44	15.59	3.50
							23	12.48	3.28	13.04	3.34	13.61	3.40	13.89	3.43	14.18	3.46	14.77	3.53	15.36	3.59
							25	12.24	3.36	12.80	3.42	13.37	3.49	13.66	3.52	13.94	3.55	14.53	3.61	15.12	3.67
							27	12.00	3.45	12.56	3.51	13.13	3.57	13.42	3.60	13.71	3.63	14.29	3.70	14.89	3.76
							29	11.76	3.53	12.32	3.60	12.89	3.66	13.18	3.69	13.47	3.72	14.06	3.78	14.66	3.85
							31	11.52	3.62	12.09	3.68	12.66	3.75	12.95	3.78	13.24	3.81	13.83	3.87	14.42	3.94
							33	11.29	3.71	11.85	3.77	12.42	3.84	12.71	3.87	13.00	3.90	13.59	3.96	14.19	4.03
							35	11.05	3.80	11.61	3.86	12.19	3.93	12.50	3.95	12.77	3.99	13.36	4.05	13.96	4.12
							37	10.81	3.89	11.38	3.95	11.95	4.02	12.24	4.05	12.54	4.08	13.13	4.15	13.73	4.21
							39	10.58	3.98	11.14	4.05	11.72	4.11	12.01	4.14	12.30	4.18	12.90	4.24	13.50	4.31
							42	10.22	4.12	10.79	4.19	11.37	4.26	11.66	4.29	11.96	4.32	12.55	4.39	13.15	4.45
							44	9.99	4.22	10.56	4.29	11.14	4.35	11.43	4.39	11.72	4.42	12.32	4.48	12.92	4.55
							46	9.76	4.32	10.33	4.38	10.91	4.45	11.20	4.48	11.49	4.52	12.09	4.58	12.69	4.65
2000	2500	2500	2500		9500	68%	10	8.80	2.21	12.42	2.26	12.65	2.32	12.79	2.34	12.95	2.37	13.31	2.42	13.74	2.47
							12	8.80	2.26	12.08	2.32	12.33	2.37	12.48	2.40	12.65	2.42	13.03	2.47	13.47	2.52
							14	8.80	2.32	11.75	2.37	12.02	2.43	12.18	2.45	12.36	2.48	12.75	2.53	13.21	2.58
							16	8.80	2.38	11.44	2.43	11.73	2.49	11.90	2.51	12.08	2.54	12.49	2.59	12.97	2.63
							18	8.80	2.44	11.15	2.49	11.45	2.55	11.63	2.57	11.82	2.60	12.25	2.65	12.74	2.69
							20	8.80	2.50	10.87	2.55	11.19	2.61	11.37	2.63	11.57	2.66	12.02	2.71	12.53	2.75
							21	8.80	2.53	10.73	2.59	11.06	2.64	11.25	2.66	11.45	2.69	11.91	2.74	12.43	2.79
							23	8.80	2.60	10.47	2.65	10.81	2.70	11.01	2.73	11.22	2.75	11.70	2.80	12.24	2.85
							25	8.80	2.66	10.22	2.72	10.58	2.77	10.79	2.79	11.01	2.82	11.50	2.87	12.06	2.91
							27	8.80	2.73	9.99	2.78	10.37	2.84	10.58	2.86	10.81	2.89	11.32	2.93	11.89	2.98
							29	8.80	2.80	9.77	2.85	10.16	2.91	10.39	2.93	10.63	2.96	11.15	3.00	11.74	3.05
							31	8.80	2.87	9.56	2.92	9.97	2.98	10.21	3.00	10.45	3.03	11.00	3.07	11.60	3.12
							33	8.80	2.94	9.37	3.00	9.80	3.05	10.04	3.07	10.30	3.10	10.86	3.15	11.48	3.19
							35	8.80	3.02	9.19	3.07	9.64	3.12	9.96	3.14	10.15	3.17	10.73	3.22	11.37	3.27
							37	8.80	3.09	9.02	3.15	9.49	3.20	9.75	3.22	10.02	3.25	10.62	3.30	11.27	3.34
							39	8.80	3.17	8.87	3.23	9.36	3.28	9.62	3.30	9.90	3.33	10.52	3.37	11.19	3.42
							42	8.80	3.29	8.67	3.34	9.18	3.40	9.46	3.42	9.76	3.44	10.39	3.49	11.09	3.54
							44	8.80	3.37	8.56	3.43	9.08	3.48	9.37	3.50	9.67	3.53	10.33	3.57	11.05	3.62
							46	8.80	3.46	8.45	3.51	9.00	3.56	9.29	3.58	9.61	3.61	10.28	3.66	11.01	3.70

12. Capacity Table

12-6. AJ125TXJ5KH/EA

COOLING

Combination (Capacity Index)					Combination (Total)	Combination (%)	Outdoor Temperature (°C,DB)	Indoor Temperature (°F, WB)													
								14		16		18		19		20		22		24	
								TC(kW)	PI(kW)	TC(kW)	PI(kW)	TC(kW)	PI(kW)	TC(kW)	PI(kW)	TC(kW)	PI(kW)	TC(kW)	PI(kW)	TC(kW)	PI(kW)
2000	2500	2500	3500		10500	75%	10	9.58	2.83	13.51	2.90	13.77	2.97	13.92	3.01	14.09	3.04	14.49	3.10	14.95	3.17
							12	9.58	2.90	13.15	2.97	13.42	3.04	13.58	3.08	13.76	3.11	14.18	3.17	14.66	3.24
							14	9.58	2.98	12.79	3.05	13.09	3.12	13.26	3.15	13.45	3.18	13.88	3.25	14.38	3.31
							16	9.58	3.05	12.46	3.12	12.77	3.19	12.95	3.22	13.15	3.26	13.60	3.32	14.12	3.38
							18	9.58	3.13	12.13	3.20	12.46	3.27	12.65	3.30	12.86	3.33	13.33	3.40	13.87	3.46
							20	9.58	3.21	11.83	3.28	12.17	3.35	12.38	3.38	12.59	3.41	13.08	3.47	13.64	3.54
							21	9.58	3.25	11.68	3.32	12.04	3.39	12.24	3.42	12.46	3.45	12.96	3.51	13.53	3.58
							23	9.58	3.33	11.39	3.40	11.77	3.47	11.98	3.50	12.22	3.53	12.73	3.60	13.32	3.66
							25	9.58	3.42	11.12	3.49	11.52	3.55	11.74	3.59	11.98	3.62	12.52	3.68	13.12	3.74
							27	9.58	3.50	10.87	3.57	11.28	3.64	11.52	3.67	11.77	3.70	12.32	3.77	12.94	3.83
							29	9.58	3.59	10.63	3.66	11.06	3.73	11.30	3.76	11.56	3.79	12.14	3.85	12.78	3.91
							31	9.58	3.68	10.40	3.75	10.86	3.82	11.11	3.85	11.38	3.88	11.97	3.95	12.63	4.00
							33	9.58	3.78	10.19	3.85	10.67	3.91	10.93	3.94	11.21	3.98	11.81	4.04	12.49	4.10
							35	9.58	3.87	10.00	3.94	10.49	4.01	10.84	4.03	11.05	4.07	11.68	4.13	12.37	4.19
							37	9.58	3.97	9.82	4.04	10.33	4.11	10.61	4.14	10.91	4.17	11.55	4.23	12.27	4.29
							39	9.58	4.07	9.66	4.14	10.18	4.20	10.47	4.24	10.78	4.27	11.45	4.33	12.18	4.39
							42	9.58	4.23	9.44	4.29	9.99	4.36	10.30	4.39	10.62	4.42	11.31	4.48	12.07	4.54
							44	9.58	4.33	9.31	4.40	9.89	4.46	10.20	4.49	10.53	4.52	11.24	4.58	12.02	4.64
							46	9.58	4.44	9.20	4.51	9.79	4.57	10.11	4.60	10.45	4.63	11.19	4.69	11.99	4.75
2000	2500	2500	5000		12000	86%	10	10.69	2.75	15.08	2.82	15.37	2.88	15.54	2.92	15.73	2.95	16.17	3.01	16.69	3.07
							12	10.69	2.82	14.67	2.89	14.98	2.95	15.16	2.98	15.36	3.02	15.82	3.08	16.36	3.14
							14	10.69	2.89	14.28	2.96	14.61	3.02	14.80	3.05	15.01	3.09	15.49	3.15	16.05	3.21
							16	10.69	2.96	13.90	3.03	14.25	3.10	14.45	3.13	14.68	3.16	15.18	3.22	15.76	3.28
							18	10.69	3.04	13.54	3.10	13.91	3.17	14.13	3.20	14.36	3.23	14.88	3.30	15.48	3.35
							20	10.69	3.11	13.20	3.18	13.59	3.25	13.81	3.28	14.06	3.31	14.60	3.37	15.22	3.43
							21	10.69	3.15	13.03	3.22	13.44	3.29	13.66	3.32	13.91	3.35	14.47	3.41	15.10	3.47
							23	10.69	3.23	12.72	3.30	13.14	3.37	13.38	3.40	13.64	3.43	14.21	3.49	14.87	3.55
							25	10.69	3.31	12.42	3.38	12.86	3.45	13.11	3.48	13.38	3.51	13.97	3.57	14.65	3.63
							27	10.69	3.40	12.13	3.47	12.59	3.53	12.85	3.56	13.13	3.59	13.75	3.65	14.45	3.71
							29	10.69	3.49	11.86	3.55	12.35	3.62	12.62	3.65	12.91	3.68	13.55	3.74	14.26	3.80
							31	10.69	3.57	11.61	3.64	12.12	3.71	12.40	3.74	12.70	3.77	13.36	3.83	14.10	3.89
							33	10.69	3.67	11.38	3.73	11.91	3.80	12.20	3.83	12.51	3.86	13.19	3.92	13.95	3.97
							35	10.69	3.76	11.16	3.82	11.71	3.89	12.10	3.91	12.33	3.95	13.03	4.01	13.81	4.07
							37	10.69	3.85	10.96	3.92	11.53	3.98	11.84	4.01	12.17	4.04	12.90	4.10	13.70	4.16
							39	10.69	3.95	10.78	4.02	11.37	4.08	11.69	4.11	12.03	4.14	12.78	4.20	13.60	4.26
							42	10.69	4.10	10.54	4.17	11.16	4.23	11.49	4.26	11.85	4.29	12.63	4.35	13.48	4.40
							44	10.69	4.20	10.39	4.27	11.03	4.33	11.38	4.36	11.75	4.39	12.55	4.45	13.42	4.50
							46	10.69	4.31	10.27	4.37	10.93	4.43	11.29	4.46	11.67	4.49	12.49	4.55	13.38	4.61

12. Capacity Table

12-6. AJ125TXJ5KH/EA

COOLING

Combination (Capacity Index)					Combination (Total)	Combination (%)	Outdoor Temperature (°C,DB)	Indoor Temperature (°F, WB)													
								14		16		18		19		20		22		24	
								TC(kW)	PI(kW)	TC(kW)	PI(kW)	TC(kW)	PI(kW)	TC(kW)	PI(kW)	TC(kW)	PI(kW)	TC(kW)	PI(kW)	TC(kW)	PI(kW)
2000	2500	2500	6800		13800	99%	10	13.61	2.74	14.14	2.80	14.68	2.86	14.96	2.89	15.23	2.92	15.79	2.98	16.36	3.04
							12	13.37	2.82	13.90	2.88	14.45	2.93	14.72	2.96	15.00	2.99	15.56	3.05	16.13	3.11
							14	13.13	2.89	13.67	2.95	14.21	3.01	14.49	3.04	14.77	3.07	15.33	3.13	15.90	3.19
							16	12.90	2.97	13.44	3.03	13.98	3.09	14.26	3.12	14.53	3.15	15.10	3.21	15.67	3.27
							18	12.66	3.05	13.20	3.11	13.75	3.17	14.03	3.20	14.30	3.23	14.87	3.29	15.44	3.35
							20	12.43	3.12	12.97	3.18	13.52	3.25	13.79	3.28	14.07	3.31	14.64	3.37	15.21	3.43
							21	12.31	3.16	12.85	3.22	13.40	3.29	13.68	3.32	13.96	3.35	14.52	3.41	15.09	3.47
							23	12.08	3.25	12.62	3.31	13.17	3.37	13.45	3.40	13.73	3.43	14.29	3.49	14.87	3.55
							25	11.85	3.33	12.39	3.39	12.94	3.45	13.22	3.48	13.50	3.51	14.06	3.57	14.64	3.63
							27	11.62	3.41	12.16	3.47	12.71	3.54	12.99	3.57	13.27	3.60	13.84	3.66	14.41	3.72
							29	11.39	3.50	11.93	3.56	12.48	3.62	12.76	3.65	13.04	3.68	13.61	3.75	14.19	3.81
							31	11.15	3.58	11.70	3.65	12.25	3.71	12.53	3.74	12.81	3.77	13.38	3.83	13.96	3.90
							33	10.92	3.67	11.47	3.73	12.02	3.80	12.30	3.83	12.59	3.86	13.16	3.92	13.74	3.99
							35	10.70	3.76	11.24	3.82	11.80	3.89	12.10	3.91	12.36	3.95	12.93	4.01	13.51	4.08
							37	10.47	3.85	11.01	3.91	11.57	3.98	11.85	4.01	12.14	4.04	12.71	4.11	13.29	4.17
							39	10.24	3.94	10.79	4.01	11.34	4.07	11.63	4.10	11.91	4.13	12.48	4.20	13.06	4.26
							42	9.90	4.08	10.45	4.15	11.01	4.21	11.29	4.24	11.57	4.28	12.15	4.34	12.73	4.41
							44	9.67	4.18	10.22	4.24	10.78	4.31	11.06	4.34	11.35	4.37	11.93	4.44	12.51	4.50
							46	9.44	4.27	10.00	4.34	10.56	4.41	10.84	4.44	11.13	4.47	11.70	4.54	12.29	4.60
2000	2500	3500	3500		11500	82%	10	10.36	2.87	14.61	2.94	14.89	3.01	15.05	3.04	15.24	3.08	15.66	3.14	16.17	3.20
							12	10.36	2.94	14.21	3.01	14.51	3.08	14.69	3.11	14.88	3.15	15.33	3.21	15.85	3.28
							14	10.36	3.01	13.83	3.08	14.15	3.15	14.34	3.19	14.54	3.22	15.01	3.29	15.55	3.35
							16	10.36	3.09	13.47	3.16	13.80	3.23	14.00	3.26	14.22	3.30	14.70	3.36	15.26	3.42
							18	10.36	3.17	13.12	3.24	13.48	3.31	13.68	3.34	13.91	3.37	14.41	3.44	15.00	3.50
							20	10.36	3.25	12.79	3.32	13.16	3.39	13.38	3.42	13.62	3.45	14.14	3.52	14.75	3.58
							21	10.36	3.29	12.63	3.36	13.01	3.43	13.24	3.46	13.48	3.49	14.01	3.56	14.63	3.62
							23	10.36	3.37	12.32	3.44	12.73	3.51	12.96	3.55	13.21	3.58	13.77	3.64	14.40	3.70
							25	10.36	3.46	12.03	3.53	12.45	3.60	12.70	3.63	12.96	3.66	13.54	3.73	14.19	3.79
							27	10.36	3.55	11.75	3.62	12.20	3.69	12.45	3.72	12.72	3.75	13.32	3.81	13.99	3.87
							29	10.36	3.64	11.49	3.71	11.96	3.77	12.22	3.81	12.50	3.84	13.12	3.90	13.82	3.96
							31	10.36	3.73	11.25	3.80	11.74	3.87	12.01	3.90	12.30	3.93	12.94	3.99	13.65	4.05
							33	10.36	3.82	11.02	3.89	11.53	3.96	11.81	3.99	12.12	4.03	12.77	4.09	13.51	4.15
							35	10.36	3.92	10.81	3.99	11.34	4.06	11.72	4.08	11.95	4.12	12.62	4.18	13.38	4.24
							37	10.36	4.02	10.62	4.09	11.17	4.16	11.47	4.19	11.79	4.22	12.49	4.28	13.27	4.34
							39	10.36	4.12	10.44	4.19	11.01	4.26	11.32	4.29	11.65	4.32	12.37	4.38	13.17	4.44
							42	10.36	4.28	10.20	4.35	10.80	4.41	11.13	4.44	11.48	4.48	12.23	4.54	13.05	4.59
							44	10.36	4.38	10.07	4.45	10.69	4.52	11.03	4.55	11.38	4.58	12.15	4.64	13.00	4.70
							46	10.36	4.49	9.95	4.56	10.59	4.63	10.94	4.66	11.30	4.69	12.09	4.75	12.96	4.81

12. Capacity Table

12-6. AJ125TXJ5KH/EA

COOLING

Combination (Capacity Index)					Combination (Total)	Combination (%)	Outdoor Temperature (°C,DB)	Indoor Temperature (°F, WB)													
								14		16		18		19		20		22		24	
								TC(kW)	PI(kW)	TC(kW)	PI(kW)	TC(kW)	PI(kW)	TC(kW)	PI(kW)	TC(kW)	PI(kW)	TC(kW)	PI(kW)	TC(kW)	PI(kW)
2000	2500	3500	5000		13000	93%	10	10.69	2.75	15.08	2.82	15.37	2.88	15.54	2.92	15.73	2.95	16.17	3.01	16.69	3.07
							12	10.69	2.82	14.67	2.89	14.98	2.95	15.16	2.98	15.36	3.02	15.82	3.08	16.36	3.14
							14	10.69	2.89	14.28	2.96	14.61	3.02	14.80	3.05	15.01	3.09	15.49	3.15	16.05	3.21
							16	10.69	2.96	13.90	3.03	14.25	3.10	14.45	3.13	14.68	3.16	15.18	3.22	15.76	3.28
							18	10.69	3.04	13.54	3.10	13.91	3.17	14.13	3.20	14.36	3.23	14.88	3.30	15.48	3.35
							20	10.69	3.11	13.20	3.18	13.59	3.25	13.81	3.28	14.06	3.31	14.60	3.37	15.22	3.43
							21	10.69	3.15	13.03	3.22	13.44	3.29	13.66	3.32	13.91	3.35	14.47	3.41	15.10	3.47
							23	10.69	3.23	12.72	3.30	13.14	3.37	13.38	3.40	13.64	3.43	14.21	3.49	14.87	3.55
							25	10.69	3.31	12.42	3.38	12.86	3.45	13.11	3.48	13.38	3.51	13.97	3.57	14.65	3.63
							27	10.69	3.40	12.13	3.47	12.59	3.53	12.85	3.56	13.13	3.59	13.75	3.65	14.45	3.71
							29	10.69	3.49	11.86	3.55	12.35	3.62	12.62	3.65	12.91	3.68	13.55	3.74	14.26	3.80
							31	10.69	3.57	11.61	3.64	12.12	3.71	12.40	3.74	12.70	3.77	13.36	3.83	14.10	3.89
							33	10.69	3.67	11.38	3.73	11.91	3.80	12.20	3.83	12.51	3.86	13.19	3.92	13.95	3.97
							35	10.69	3.76	11.16	3.82	11.71	3.89	12.10	3.91	12.33	3.95	13.03	4.01	13.81	4.07
							37	10.69	3.85	10.96	3.92	11.53	3.98	11.84	4.01	12.17	4.04	12.90	4.10	13.70	4.16
							39	10.69	3.95	10.78	4.02	11.37	4.08	11.69	4.11	12.03	4.14	12.78	4.20	13.60	4.26
							42	10.69	4.10	10.54	4.17	11.16	4.23	11.49	4.26	11.85	4.29	12.63	4.35	13.48	4.40
							44	10.69	4.20	10.39	4.27	11.03	4.33	11.38	4.36	11.75	4.39	12.55	4.45	13.42	4.50
							46	10.69	4.31	10.27	4.37	10.93	4.43	11.29	4.46	11.67	4.49	12.49	4.55	13.38	4.61
2000	2500	3500	6800		14800	106%	10	14.05	2.77	14.61	2.83	15.17	2.89	15.45	2.92	15.74	2.95	16.31	3.01	16.90	3.07
							12	13.81	2.85	14.36	2.91	14.93	2.96	15.21	2.99	15.50	3.02	16.07	3.08	16.66	3.14
							14	13.57	2.92	14.12	2.98	14.68	3.04	14.97	3.07	15.25	3.10	15.83	3.16	16.42	3.22
							16	13.32	3.00	13.88	3.06	14.44	3.12	14.73	3.15	15.02	3.18	15.60	3.24	16.18	3.30
							18	13.08	3.08	13.64	3.14	14.20	3.20	14.49	3.23	14.78	3.26	15.36	3.32	15.95	3.38
							20	12.84	3.16	13.40	3.22	13.96	3.28	14.25	3.31	14.54	3.34	15.12	3.40	15.71	3.46
							21	12.72	3.20	13.28	3.26	13.84	3.32	14.13	3.35	14.42	3.38	15.00	3.44	15.59	3.50
							23	12.48	3.28	13.04	3.34	13.61	3.40	13.89	3.43	14.18	3.46	14.77	3.53	15.36	3.59
							25	12.24	3.36	12.80	3.42	13.37	3.49	13.66	3.52	13.94	3.55	14.53	3.61	15.12	3.67
							27	12.00	3.45	12.56	3.51	13.13	3.57	13.42	3.60	13.71	3.63	14.29	3.70	14.89	3.76
							29	11.76	3.53	12.32	3.60	12.89	3.66	13.18	3.69	13.47	3.72	14.06	3.78	14.66	3.85
							31	11.52	3.62	12.09	3.68	12.66	3.75	12.95	3.78	13.24	3.81	13.83	3.87	14.42	3.94
							33	11.29	3.71	11.85	3.77	12.42	3.84	12.71	3.87	13.00	3.90	13.59	3.96	14.19	4.03
							35	11.05	3.80	11.61	3.86	12.19	3.93	12.50	3.95	12.77	3.99	13.36	4.05	13.96	4.12
							37	10.81	3.89	11.38	3.95	11.95	4.02	12.24	4.05	12.54	4.08	13.13	4.15	13.73	4.21
							39	10.58	3.98	11.14	4.05	11.72	4.11	12.01	4.14	12.30	4.18	12.90	4.24	13.50	4.31
							42	10.22	4.12	10.79	4.19	11.37	4.26	11.66	4.29	11.96	4.32	12.55	4.39	13.15	4.45
							44	9.99	4.22	10.56	4.29	11.14	4.35	11.43	4.39	11.72	4.42	12.32	4.48	12.92	4.55
							46	9.76	4.32	10.33	4.38	10.91	4.45	11.20	4.48	11.49	4.52	12.09	4.58	12.69	4.65

12. Capacity Table

12-6. AJ125TXJ5KH/EA

COOLING

Combination (Capacity Index)					Combination (Total)	Combination (%)	Outdoor Temperature (°C,DB)	Indoor Temperature (°F, WB)													
								14		16		18		19		20		22		24	
								TC(kW)	PI(kW)	TC(kW)	PI(kW)	TC(kW)	PI(kW)	TC(kW)	PI(kW)	TC(kW)	PI(kW)	TC(kW)	PI(kW)	TC(kW)	PI(kW)
2000	2500	5000	5000		14500	104%	10	14.05	2.77	14.61	2.83	15.17	2.89	15.45	2.92	15.74	2.95	16.31	3.01	16.90	3.07
							12	13.81	2.85	14.36	2.91	14.93	2.96	15.21	2.99	15.50	3.02	16.07	3.08	16.66	3.14
							14	13.57	2.92	14.12	2.98	14.68	3.04	14.97	3.07	15.25	3.10	15.83	3.16	16.42	3.22
							16	13.32	3.00	13.88	3.06	14.44	3.12	14.73	3.15	15.02	3.18	15.60	3.24	16.18	3.30
							18	13.08	3.08	13.64	3.14	14.20	3.20	14.49	3.23	14.78	3.26	15.36	3.32	15.95	3.38
							20	12.84	3.16	13.40	3.22	13.96	3.28	14.25	3.31	14.54	3.34	15.12	3.40	15.71	3.46
							21	12.72	3.20	13.28	3.26	13.84	3.32	14.13	3.35	14.42	3.38	15.00	3.44	15.59	3.50
							23	12.48	3.28	13.04	3.34	13.61	3.40	13.89	3.43	14.18	3.46	14.77	3.53	15.36	3.59
							25	12.24	3.36	12.80	3.42	13.37	3.49	13.66	3.52	13.94	3.55	14.53	3.61	15.12	3.67
							27	12.00	3.45	12.56	3.51	13.13	3.57	13.42	3.60	13.71	3.63	14.29	3.70	14.89	3.76
							29	11.76	3.53	12.32	3.60	12.89	3.66	13.18	3.69	13.47	3.72	14.06	3.78	14.66	3.85
							31	11.52	3.62	12.09	3.68	12.66	3.75	12.95	3.78	13.24	3.81	13.83	3.87	14.42	3.94
							33	11.29	3.71	11.85	3.77	12.42	3.84	12.71	3.87	13.00	3.90	13.59	3.96	14.19	4.03
							35	11.05	3.80	11.61	3.86	12.19	3.93	12.50	3.95	12.77	3.99	13.36	4.05	13.96	4.12
							37	10.81	3.89	11.38	3.95	11.95	4.02	12.24	4.05	12.54	4.08	13.13	4.15	13.73	4.21
							39	10.58	3.98	11.14	4.05	11.72	4.11	12.01	4.14	12.30	4.18	12.90	4.24	13.50	4.31
							42	10.22	4.12	10.79	4.19	11.37	4.26	11.66	4.29	11.96	4.32	12.55	4.39	13.15	4.45
							44	9.99	4.22	10.56	4.29	11.14	4.35	11.43	4.39	11.72	4.42	12.32	4.48	12.92	4.55
							46	9.76	4.32	10.33	4.38	10.91	4.45	11.20	4.48	11.49	4.52	12.09	4.58	12.69	4.65
2000	2500	5000	6800		16300	116%	10	14.05	2.77	14.61	2.83	15.17	2.89	15.45	2.92	15.74	2.95	16.31	3.01	16.90	3.07
							12	13.81	2.85	14.36	2.91	14.93	2.96	15.21	2.99	15.50	3.02	16.07	3.08	16.66	3.14
							14	13.57	2.92	14.12	2.98	14.68	3.04	14.97	3.07	15.25	3.10	15.83	3.16	16.42	3.22
							16	13.32	3.00	13.88	3.06	14.44	3.12	14.73	3.15	15.02	3.18	15.60	3.24	16.18	3.30
							18	13.08	3.08	13.64	3.14	14.20	3.20	14.49	3.23	14.78	3.26	15.36	3.32	15.95	3.38
							20	12.84	3.16	13.40	3.22	13.96	3.28	14.25	3.31	14.54	3.34	15.12	3.40	15.71	3.46
							21	12.72	3.20	13.28	3.26	13.84	3.32	14.13	3.35	14.42	3.38	15.00	3.44	15.59	3.50
							23	12.48	3.28	13.04	3.34	13.61	3.40	13.89	3.43	14.18	3.46	14.77	3.53	15.36	3.59
							25	12.24	3.36	12.80	3.42	13.37	3.49	13.66	3.52	13.94	3.55	14.53	3.61	15.12	3.67
							27	12.00	3.45	12.56	3.51	13.13	3.57	13.42	3.60	13.71	3.63	14.29	3.70	14.89	3.76
							29	11.76	3.53	12.32	3.60	12.89	3.66	13.18	3.69	13.47	3.72	14.06	3.78	14.66	3.85
							31	11.52	3.62	12.09	3.68	12.66	3.75	12.95	3.78	13.24	3.81	13.83	3.87	14.42	3.94
							33	11.29	3.71	11.85	3.77	12.42	3.84	12.71	3.87	13.00	3.90	13.59	3.96	14.19	4.03
							35	11.05	3.80	11.61	3.86	12.19	3.93	12.50	3.95	12.77	3.99	13.36	4.05	13.96	4.12
							37	10.81	3.89	11.38	3.95	11.95	4.02	12.24	4.05	12.54	4.08	13.13	4.15	13.73	4.21
							39	10.58	3.98	11.14	4.05	11.72	4.11	12.01	4.14	12.30	4.18	12.90	4.24	13.50	4.31
							42	10.22	4.12	10.79	4.19	11.37	4.26	11.66	4.29	11.96	4.32	12.55	4.39	13.15	4.45
							44	9.99	4.22	10.56	4.29	11.14	4.35	11.43	4.39	11.72	4.42	12.32	4.48	12.92	4.55
							46	9.76	4.32	10.33	4.38	10.91	4.45	11.20	4.48	11.49	4.52	12.09	4.58	12.69	4.65

12. Capacity Table

12-6. AJ125TXJ5KH/EA

COOLING

Combination (Capacity Index)					Combination (Total)	Combination (%)	Outdoor Temperature (°C,DB)	Indoor Temperature (°F, WB)													
								14		16		18		19		20		22		24	
								TC(kW)	PI(kW)	TC(kW)	PI(kW)	TC(kW)	PI(kW)	TC(kW)	PI(kW)	TC(kW)	PI(kW)	TC(kW)	PI(kW)	TC(kW)	PI(kW)
2000	3500	3500	3500		12500	89%	10	10.69	2.75	15.08	2.82	15.37	2.88	15.54	2.92	15.73	2.95	16.17	3.01	16.69	3.07
							12	10.69	2.82	14.67	2.89	14.98	2.95	15.16	2.98	15.36	3.02	15.82	3.08	16.36	3.14
							14	10.69	2.89	14.28	2.96	14.61	3.02	14.80	3.05	15.01	3.09	15.49	3.15	16.05	3.21
							16	10.69	2.96	13.90	3.03	14.25	3.10	14.45	3.13	14.68	3.16	15.18	3.22	15.76	3.28
							18	10.69	3.04	13.54	3.10	13.91	3.17	14.13	3.20	14.36	3.23	14.88	3.30	15.48	3.35
							20	10.69	3.11	13.20	3.18	13.59	3.25	13.81	3.28	14.06	3.31	14.60	3.37	15.22	3.43
							21	10.69	3.15	13.03	3.22	13.44	3.29	13.66	3.32	13.91	3.35	14.47	3.41	15.10	3.47
							23	10.69	3.23	12.72	3.30	13.14	3.37	13.38	3.40	13.64	3.43	14.21	3.49	14.87	3.55
							25	10.69	3.31	12.42	3.38	12.86	3.45	13.11	3.48	13.38	3.51	13.97	3.57	14.65	3.63
							27	10.69	3.40	12.13	3.47	12.59	3.53	12.85	3.56	13.13	3.59	13.75	3.65	14.45	3.71
							29	10.69	3.49	11.86	3.55	12.35	3.62	12.62	3.65	12.91	3.68	13.55	3.74	14.26	3.80
							31	10.69	3.57	11.61	3.64	12.12	3.71	12.40	3.74	12.70	3.77	13.36	3.83	14.10	3.89
							33	10.69	3.67	11.38	3.73	11.91	3.80	12.20	3.83	12.51	3.86	13.19	3.92	13.95	3.97
							35	10.69	3.76	11.16	3.82	11.71	3.89	12.10	3.91	12.33	3.95	13.03	4.01	13.81	4.07
							37	10.69	3.85	10.96	3.92	11.53	3.98	11.84	4.01	12.17	4.04	12.90	4.10	13.70	4.16
							39	10.69	3.95	10.78	4.02	11.37	4.08	11.69	4.11	12.03	4.14	12.78	4.20	13.60	4.26
							42	10.69	4.10	10.54	4.17	11.16	4.23	11.49	4.26	11.85	4.29	12.63	4.35	13.48	4.40
							44	10.69	4.20	10.39	4.27	11.03	4.33	11.38	4.36	11.75	4.39	12.55	4.45	13.42	4.50
							46	10.69	4.31	10.27	4.37	10.93	4.43	11.29	4.46	11.67	4.49	12.49	4.55	13.38	4.61
2000	3500	3500	5000		14000	100%	10	13.61	2.74	14.14	2.80	14.68	2.86	14.96	2.89	15.23	2.92	15.79	2.98	16.36	3.04
							12	13.37	2.82	13.90	2.88	14.45	2.93	14.72	2.96	15.00	2.99	15.56	3.05	16.13	3.11
							14	13.13	2.89	13.67	2.95	14.21	3.01	14.49	3.04	14.77	3.07	15.33	3.13	15.90	3.19
							16	12.90	2.97	13.44	3.03	13.98	3.09	14.26	3.12	14.53	3.15	15.10	3.21	15.67	3.27
							18	12.66	3.05	13.20	3.11	13.75	3.17	14.03	3.20	14.30	3.23	14.87	3.29	15.44	3.35
							20	12.43	3.12	12.97	3.18	13.52	3.25	13.79	3.28	14.07	3.31	14.64	3.37	15.21	3.43
							21	12.31	3.16	12.85	3.22	13.40	3.29	13.68	3.32	13.96	3.35	14.52	3.41	15.09	3.47
							23	12.08	3.25	12.62	3.31	13.17	3.37	13.45	3.40	13.73	3.43	14.29	3.49	14.87	3.55
							25	11.85	3.33	12.39	3.39	12.94	3.45	13.22	3.48	13.50	3.51	14.06	3.57	14.64	3.63
							27	11.62	3.41	12.16	3.47	12.71	3.54	12.99	3.57	13.27	3.60	13.84	3.66	14.41	3.72
							29	11.39	3.50	11.93	3.56	12.48	3.62	12.76	3.65	13.04	3.68	13.61	3.75	14.19	3.81
							31	11.15	3.58	11.70	3.65	12.25	3.71	12.53	3.74	12.81	3.77	13.38	3.83	13.96	3.90
							33	10.92	3.67	11.47	3.73	12.02	3.80	12.30	3.83	12.59	3.86	13.16	3.92	13.74	3.99
							35	10.70	3.76	11.24	3.82	11.80	3.89	12.10	3.91	12.36	3.95	12.93	4.01	13.51	4.08
							37	10.47	3.85	11.01	3.91	11.57	3.98	11.85	4.01	12.14	4.04	12.71	4.11	13.29	4.17
							39	10.24	3.94	10.79	4.01	11.34	4.07	11.63	4.10	11.91	4.13	12.48	4.20	13.06	4.26
							42	9.90	4.08	10.45	4.15	11.01	4.21	11.29	4.24	11.57	4.28	12.15	4.34	12.73	4.41
							44	9.67	4.18	10.22	4.24	10.78	4.31	11.06	4.34	11.35	4.37	11.93	4.44	12.51	4.50
							46	9.44	4.27	10.00	4.34	10.56	4.41	10.84	4.44	11.13	4.47	11.70	4.54	12.29	4.60

12. Capacity Table

12-6. AJ125TXJ5KH/EA

COOLING

Combination (Capacity Index)					Combination (Total)	Combination (%)	Outdoor Temperature (°C,DB)	Indoor Temperature (°F, WB)													
								14		16		18		19		20		22		24	
								TC(kW)	PI(kW)	TC(kW)	PI(kW)	TC(kW)	PI(kW)	TC(kW)	PI(kW)	TC(kW)	PI(kW)	TC(kW)	PI(kW)	TC(kW)	PI(kW)
2000	3500	3500	6800		15800	113%	10	14.05	2.77	14.61	2.83	15.17	2.89	15.45	2.92	15.74	2.95	16.31	3.01	16.90	3.07
							12	13.81	2.85	14.36	2.91	14.93	2.96	15.21	2.99	15.50	3.02	16.07	3.08	16.66	3.14
							14	13.57	2.92	14.12	2.98	14.68	3.04	14.97	3.07	15.25	3.10	15.83	3.16	16.42	3.22
							16	13.32	3.00	13.88	3.06	14.44	3.12	14.73	3.15	15.02	3.18	15.60	3.24	16.18	3.30
							18	13.08	3.08	13.64	3.14	14.20	3.20	14.49	3.23	14.78	3.26	15.36	3.32	15.95	3.38
							20	12.84	3.16	13.40	3.22	13.96	3.28	14.25	3.31	14.54	3.34	15.12	3.40	15.71	3.46
							21	12.72	3.20	13.28	3.26	13.84	3.32	14.13	3.35	14.42	3.38	15.00	3.44	15.59	3.50
							23	12.48	3.28	13.04	3.34	13.61	3.40	13.89	3.43	14.18	3.46	14.77	3.53	15.36	3.59
							25	12.24	3.36	12.80	3.42	13.37	3.49	13.66	3.52	13.94	3.55	14.53	3.61	15.12	3.67
							27	12.00	3.45	12.56	3.51	13.13	3.57	13.42	3.60	13.71	3.63	14.29	3.70	14.89	3.76
							29	11.76	3.53	12.32	3.60	12.89	3.66	13.18	3.69	13.47	3.72	14.06	3.78	14.66	3.85
							31	11.52	3.62	12.09	3.68	12.66	3.75	12.95	3.78	13.24	3.81	13.83	3.87	14.42	3.94
							33	11.29	3.71	11.85	3.77	12.42	3.84	12.71	3.87	13.00	3.90	13.59	3.96	14.19	4.03
							35	11.05	3.80	11.61	3.86	12.19	3.93	12.50	3.95	12.77	3.99	13.36	4.05	13.96	4.12
							37	10.81	3.89	11.38	3.95	11.95	4.02	12.24	4.05	12.54	4.08	13.13	4.15	13.73	4.21
							39	10.58	3.98	11.14	4.05	11.72	4.11	12.01	4.14	12.30	4.18	12.90	4.24	13.50	4.31
							42	10.22	4.12	10.79	4.19	11.37	4.26	11.66	4.29	11.96	4.32	12.55	4.39	13.15	4.45
							44	9.99	4.22	10.56	4.29	11.14	4.35	11.43	4.39	11.72	4.42	12.32	4.48	12.92	4.55
							46	9.76	4.32	10.33	4.38	10.91	4.45	11.20	4.48	11.49	4.52	12.09	4.58	12.69	4.65
2000	3500	5000	5000		15500	111%	10	14.05	2.77	14.61	2.83	15.17	2.89	15.45	2.92	15.74	2.95	16.31	3.01	16.90	3.07
							12	13.81	2.85	14.36	2.91	14.93	2.96	15.21	2.99	15.50	3.02	16.07	3.08	16.66	3.14
							14	13.57	2.92	14.12	2.98	14.68	3.04	14.97	3.07	15.25	3.10	15.83	3.16	16.42	3.22
							16	13.32	3.00	13.88	3.06	14.44	3.12	14.73	3.15	15.02	3.18	15.60	3.24	16.18	3.30
							18	13.08	3.08	13.64	3.14	14.20	3.20	14.49	3.23	14.78	3.26	15.36	3.32	15.95	3.38
							20	12.84	3.16	13.40	3.22	13.96	3.28	14.25	3.31	14.54	3.34	15.12	3.40	15.71	3.46
							21	12.72	3.20	13.28	3.26	13.84	3.32	14.13	3.35	14.42	3.38	15.00	3.44	15.59	3.50
							23	12.48	3.28	13.04	3.34	13.61	3.40	13.89	3.43	14.18	3.46	14.77	3.53	15.36	3.59
							25	12.24	3.36	12.80	3.42	13.37	3.49	13.66	3.52	13.94	3.55	14.53	3.61	15.12	3.67
							27	12.00	3.45	12.56	3.51	13.13	3.57	13.42	3.60	13.71	3.63	14.29	3.70	14.89	3.76
							29	11.76	3.53	12.32	3.60	12.89	3.66	13.18	3.69	13.47	3.72	14.06	3.78	14.66	3.85
							31	11.52	3.62	12.09	3.68	12.66	3.75	12.95	3.78	13.24	3.81	13.83	3.87	14.42	3.94
							33	11.29	3.71	11.85	3.77	12.42	3.84	12.71	3.87	13.00	3.90	13.59	3.96	14.19	4.03
							35	11.05	3.80	11.61	3.86	12.19	3.93	12.50	3.95	12.77	3.99	13.36	4.05	13.96	4.12
							37	10.81	3.89	11.38	3.95	11.95	4.02	12.24	4.05	12.54	4.08	13.13	4.15	13.73	4.21
							39	10.58	3.98	11.14	4.05	11.72	4.11	12.01	4.14	12.30	4.18	12.90	4.24	13.50	4.31
							42	10.22	4.12	10.79	4.19	11.37	4.26	11.66	4.29	11.96	4.32	12.55	4.39	13.15	4.45
							44	9.99	4.22	10.56	4.29	11.14	4.35	11.43	4.39	11.72	4.42	12.32	4.48	12.92	4.55
							46	9.76	4.32	10.33	4.38	10.91	4.45	11.20	4.48	11.49	4.52	12.09	4.58	12.69	4.65

12. Capacity Table

12-6. AJ125TXJ5KH/EA

COOLING

Combination (Capacity Index)					Combination (Total)	Combination (%)	Outdoor Temperature (°C,DB)	Indoor Temperature (°F, WB)													
								14		16		18		19		20		22		24	
								TC(kW)	PI(kW)	TC(kW)	PI(kW)	TC(kW)	PI(kW)	TC(kW)	PI(kW)	TC(kW)	PI(kW)	TC(kW)	PI(kW)	TC(kW)	PI(kW)
2000	3500	5000	6800		17300	124%	10	14.05	2.77	14.61	2.83	15.17	2.89	15.45	2.92	15.74	2.95	16.31	3.01	16.90	3.07
							12	13.81	2.85	14.36	2.91	14.93	2.96	15.21	2.99	15.50	3.02	16.07	3.08	16.66	3.14
							14	13.57	2.92	14.12	2.98	14.68	3.04	14.97	3.07	15.25	3.10	15.83	3.16	16.42	3.22
							16	13.32	3.00	13.88	3.06	14.44	3.12	14.73	3.15	15.02	3.18	15.60	3.24	16.18	3.30
							18	13.08	3.08	13.64	3.14	14.20	3.20	14.49	3.23	14.78	3.26	15.36	3.32	15.95	3.38
							20	12.84	3.16	13.40	3.22	13.96	3.28	14.25	3.31	14.54	3.34	15.12	3.40	15.71	3.46
							21	12.72	3.20	13.28	3.26	13.84	3.32	14.13	3.35	14.42	3.38	15.00	3.44	15.59	3.50
							23	12.48	3.28	13.04	3.34	13.61	3.40	13.89	3.43	14.18	3.46	14.77	3.53	15.36	3.59
							25	12.24	3.36	12.80	3.42	13.37	3.49	13.66	3.52	13.94	3.55	14.53	3.61	15.12	3.67
							27	12.00	3.45	12.56	3.51	13.13	3.57	13.42	3.60	13.71	3.63	14.29	3.70	14.89	3.76
							29	11.76	3.53	12.32	3.60	12.89	3.66	13.18	3.69	13.47	3.72	14.06	3.78	14.66	3.85
							31	11.52	3.62	12.09	3.68	12.66	3.75	12.95	3.78	13.24	3.81	13.83	3.87	14.42	3.94
							33	11.29	3.71	11.85	3.77	12.42	3.84	12.71	3.87	13.00	3.90	13.59	3.96	14.19	4.03
							35	11.05	3.80	11.61	3.86	12.19	3.93	12.50	3.95	12.77	3.99	13.36	4.05	13.96	4.12
							37	10.81	3.89	11.38	3.95	11.95	4.02	12.24	4.05	12.54	4.08	13.13	4.15	13.73	4.21
							39	10.58	3.98	11.14	4.05	11.72	4.11	12.01	4.14	12.30	4.18	12.90	4.24	13.50	4.31
							42	10.22	4.12	10.79	4.19	11.37	4.26	11.66	4.29	11.96	4.32	12.55	4.39	13.15	4.45
							44	9.99	4.22	10.56	4.29	11.14	4.35	11.43	4.39	11.72	4.42	12.32	4.48	12.92	4.55
							46	9.76	4.32	10.33	4.38	10.91	4.45	11.20	4.48	11.49	4.52	12.09	4.58	12.69	4.65
2000	5000	5000	5000		17000	121%	10	14.05	2.77	14.61	2.83	15.17	2.89	15.45	2.92	15.74	2.95	16.31	3.01	16.90	3.07
							12	13.81	2.85	14.36	2.91	14.93	2.96	15.21	2.99	15.50	3.02	16.07	3.08	16.66	3.14
							14	13.57	2.92	14.12	2.98	14.68	3.04	14.97	3.07	15.25	3.10	15.83	3.16	16.42	3.22
							16	13.32	3.00	13.88	3.06	14.44	3.12	14.73	3.15	15.02	3.18	15.60	3.24	16.18	3.30
							18	13.08	3.08	13.64	3.14	14.20	3.20	14.49	3.23	14.78	3.26	15.36	3.32	15.95	3.38
							20	12.84	3.16	13.40	3.22	13.96	3.28	14.25	3.31	14.54	3.34	15.12	3.40	15.71	3.46
							21	12.72	3.20	13.28	3.26	13.84	3.32	14.13	3.35	14.42	3.38	15.00	3.44	15.59	3.50
							23	12.48	3.28	13.04	3.34	13.61	3.40	13.89	3.43	14.18	3.46	14.77	3.53	15.36	3.59
							25	12.24	3.36	12.80	3.42	13.37	3.49	13.66	3.52	13.94	3.55	14.53	3.61	15.12	3.67
							27	12.00	3.45	12.56	3.51	13.13	3.57	13.42	3.60	13.71	3.63	14.29	3.70	14.89	3.76
							29	11.76	3.53	12.32	3.60	12.89	3.66	13.18	3.69	13.47	3.72	14.06	3.78	14.66	3.85
							31	11.52	3.62	12.09	3.68	12.66	3.75	12.95	3.78	13.24	3.81	13.83	3.87	14.42	3.94
							33	11.29	3.71	11.85	3.77	12.42	3.84	12.71	3.87	13.00	3.90	13.59	3.96	14.19	4.03
							35	11.05	3.80	11.61	3.86	12.19	3.93	12.50	3.95	12.77	3.99	13.36	4.05	13.96	4.12
							37	10.81	3.89	11.38	3.95	11.95	4.02	12.24	4.05	12.54	4.08	13.13	4.15	13.73	4.21
							39	10.58	3.98	11.14	4.05	11.72	4.11	12.01	4.14	12.30	4.18	12.90	4.24	13.50	4.31
							42	10.22	4.12	10.79	4.19	11.37	4.26	11.66	4.29	11.96	4.32	12.55	4.39	13.15	4.45
							44	9.99	4.22	10.56	4.29	11.14	4.35	11.43	4.39	11.72	4.42	12.32	4.48	12.92	4.55
							46	9.76	4.32	10.33	4.38	10.91	4.45	11.20	4.48	11.49	4.52	12.09	4.58	12.69	4.65

12. Capacity Table

12-6. AJ125TXJ5KH/EA

COOLING

Combination (Capacity Index)					Combination (Total)	Combination (%)	Outdoor Temperature (°C,DB)	Indoor Temperature (°F, WB)													
								14		16		18		19		20		22		24	
								TC(kW)	PI(kW)	TC(kW)	PI(kW)	TC(kW)	PI(kW)	TC(kW)	PI(kW)	TC(kW)	PI(kW)	TC(kW)	PI(kW)	TC(kW)	PI(kW)
2500	2500	2500	2500		10000	71%	10	9.32	2.32	13.15	2.38	13.40	2.43	13.55	2.46	13.72	2.49	14.10	2.54	14.55	2.59
							12	9.32	2.38	12.79	2.44	13.06	2.49	13.22	2.52	13.40	2.55	13.80	2.60	14.27	2.65
							14	9.32	2.44	12.45	2.49	12.74	2.55	12.90	2.58	13.09	2.61	13.51	2.66	14.00	2.71
							16	9.32	2.50	12.12	2.56	12.43	2.61	12.60	2.64	12.80	2.67	13.23	2.72	13.74	2.77
							18	9.32	2.56	11.81	2.62	12.13	2.68	12.32	2.70	12.52	2.73	12.98	2.78	13.50	2.83
							20	9.32	2.63	11.51	2.68	11.85	2.74	12.04	2.77	12.26	2.79	12.73	2.85	13.27	2.89
							21	9.32	2.66	11.37	2.72	11.71	2.77	11.91	2.80	12.13	2.83	12.61	2.88	13.17	2.93
							23	9.32	2.73	11.09	2.79	11.46	2.84	11.66	2.87	11.89	2.89	12.39	2.95	12.96	2.99
							25	9.32	2.80	10.83	2.85	11.21	2.91	11.43	2.94	11.66	2.96	12.18	3.01	12.77	3.06
							27	9.32	2.87	10.58	2.93	10.98	2.98	11.21	3.01	11.45	3.03	11.99	3.08	12.60	3.13
							29	9.32	2.94	10.34	3.00	10.77	3.05	11.00	3.08	11.26	3.11	11.81	3.16	12.44	3.21
							31	9.32	3.02	10.13	3.07	10.57	3.13	10.81	3.15	11.07	3.18	11.65	3.23	12.29	3.28
							33	9.32	3.09	9.92	3.15	10.38	3.20	10.63	3.23	10.91	3.26	11.50	3.31	12.16	3.35
							35	9.32	3.17	9.73	3.23	10.21	3.28	10.55	3.30	10.75	3.33	11.36	3.38	12.04	3.43
							37	9.32	3.25	9.56	3.31	10.05	3.36	10.33	3.39	10.61	3.41	11.24	3.46	11.94	3.51
							39	9.32	3.33	9.40	3.39	9.91	3.44	10.19	3.47	10.49	3.49	11.14	3.54	11.85	3.59
							42	9.32	3.46	9.19	3.52	9.73	3.57	10.02	3.59	10.33	3.62	11.01	3.67	11.75	3.72
							44	9.32	3.55	9.06	3.60	9.62	3.65	9.93	3.68	10.25	3.71	10.94	3.75	11.70	3.80
							46	9.32	3.63	8.95	3.69	9.53	3.74	9.84	3.77	10.17	3.79	10.89	3.84	11.66	3.89
2500	2500	2500	3500		11000	79%	10	10.10	2.85	14.25	2.92	14.52	2.99	14.68	3.03	14.86	3.06	15.28	3.13	15.77	3.19
							12	10.10	2.92	13.86	3.00	14.15	3.07	14.32	3.10	14.51	3.13	14.95	3.20	15.46	3.26
							14	10.10	3.00	13.49	3.07	13.80	3.14	13.98	3.17	14.18	3.21	14.64	3.27	15.16	3.33
							16	10.10	3.07	13.13	3.14	13.46	3.21	13.65	3.25	13.86	3.28	14.34	3.34	14.89	3.41
							18	10.10	3.15	12.79	3.22	13.14	3.29	13.34	3.32	13.56	3.36	14.06	3.42	14.63	3.48
							20	10.10	3.23	12.47	3.30	12.84	3.37	13.05	3.40	13.28	3.44	13.79	3.50	14.38	3.56
							21	10.10	3.27	12.31	3.34	12.69	3.41	12.91	3.44	13.14	3.48	13.67	3.54	14.26	3.60
							23	10.10	3.36	12.01	3.43	12.41	3.49	12.64	3.53	12.88	3.56	13.43	3.62	14.04	3.68
							25	10.10	3.44	11.73	3.51	12.15	3.58	12.38	3.61	12.64	3.65	13.20	3.71	13.84	3.77
							27	10.10	3.53	11.46	3.60	11.90	3.67	12.14	3.70	12.41	3.73	12.99	3.79	13.65	3.85
							29	10.10	3.62	11.21	3.69	11.66	3.76	11.92	3.79	12.19	3.82	12.80	3.88	13.47	3.94
							31	10.10	3.71	10.97	3.78	11.45	3.85	11.71	3.88	12.00	3.91	12.62	3.97	13.32	4.03
							33	10.10	3.81	10.75	3.88	11.25	3.94	11.52	3.97	11.82	4.01	12.46	4.07	13.17	4.13
							35	10.10	3.90	10.54	3.97	11.06	4.04	11.43	4.06	11.65	4.10	12.31	4.16	13.05	4.22
							37	10.10	4.00	10.36	4.07	10.89	4.14	11.19	4.17	11.50	4.20	12.18	4.26	12.94	4.32
							39	10.10	4.10	10.18	4.17	10.74	4.24	11.04	4.27	11.37	4.30	12.07	4.36	12.84	4.42
							42	10.10	4.26	9.95	4.32	10.54	4.39	10.86	4.42	11.20	4.45	11.93	4.51	12.73	4.57
							44	10.10	4.36	9.82	4.43	10.42	4.50	10.75	4.53	11.10	4.56	11.85	4.62	12.68	4.68
							46	10.10	4.47	9.70	4.54	10.33	4.60	10.67	4.64	11.02	4.67	11.79	4.73	12.64	4.78

12. Capacity Table

12-6. AJ125TXJ5KH/EA

COOLING

Combination (Capacity Index)					Combination (Total)	Combination (%)	Outdoor Temperature (°C,DB)	Indoor Temperature (°F, WB)													
								14		16		18		19		20		22		24	
								TC(kW)	PI(kW)	TC(kW)	PI(kW)	TC(kW)	PI(kW)	TC(kW)	PI(kW)	TC(kW)	PI(kW)	TC(kW)	PI(kW)	TC(kW)	PI(kW)
2500	2500	2500	5000		12500	89%	10	10.69	2.75	15.08	2.82	15.37	2.88	15.54	2.92	15.73	2.95	16.17	3.01	16.69	3.07
							12	10.69	2.82	14.67	2.89	14.98	2.95	15.16	2.98	15.36	3.02	15.82	3.08	16.36	3.14
							14	10.69	2.89	14.28	2.96	14.61	3.02	14.80	3.05	15.01	3.09	15.49	3.15	16.05	3.21
							16	10.69	2.96	13.90	3.03	14.25	3.10	14.45	3.13	14.68	3.16	15.18	3.22	15.76	3.28
							18	10.69	3.04	13.54	3.10	13.91	3.17	14.13	3.20	14.36	3.23	14.88	3.30	15.48	3.35
							20	10.69	3.11	13.20	3.18	13.59	3.25	13.81	3.28	14.06	3.31	14.60	3.37	15.22	3.43
							21	10.69	3.15	13.03	3.22	13.44	3.29	13.66	3.32	13.91	3.35	14.47	3.41	15.10	3.47
							23	10.69	3.23	12.72	3.30	13.14	3.37	13.38	3.40	13.64	3.43	14.21	3.49	14.87	3.55
							25	10.69	3.31	12.42	3.38	12.86	3.45	13.11	3.48	13.38	3.51	13.97	3.57	14.65	3.63
							27	10.69	3.40	12.13	3.47	12.59	3.53	12.85	3.56	13.13	3.59	13.75	3.65	14.45	3.71
							29	10.69	3.49	11.86	3.55	12.35	3.62	12.62	3.65	12.91	3.68	13.55	3.74	14.26	3.80
							31	10.69	3.57	11.61	3.64	12.12	3.71	12.40	3.74	12.70	3.77	13.36	3.83	14.10	3.89
							33	10.69	3.67	11.38	3.73	11.91	3.80	12.20	3.83	12.51	3.86	13.19	3.92	13.95	3.97
							35	10.69	3.76	11.16	3.82	11.71	3.89	12.10	3.91	12.33	3.95	13.03	4.01	13.81	4.07
							37	10.69	3.85	10.96	3.92	11.53	3.98	11.84	4.01	12.17	4.04	12.90	4.10	13.70	4.16
							39	10.69	3.95	10.78	4.02	11.37	4.08	11.69	4.11	12.03	4.14	12.78	4.20	13.60	4.26
							42	10.69	4.10	10.54	4.17	11.16	4.23	11.49	4.26	11.85	4.29	12.63	4.35	13.48	4.40
							44	10.69	4.20	10.39	4.27	11.03	4.33	11.38	4.36	11.75	4.39	12.55	4.45	13.42	4.50
							46	10.69	4.31	10.27	4.37	10.93	4.43	11.29	4.46	11.67	4.49	12.49	4.55	13.38	4.61
2500	2500	2500	6800		14300	102%	10	14.05	2.77	14.61	2.83	15.17	2.89	15.45	2.92	15.74	2.95	16.31	3.01	16.90	3.07
							12	13.81	2.85	14.36	2.91	14.93	2.96	15.21	2.99	15.50	3.02	16.07	3.08	16.66	3.14
							14	13.57	2.92	14.12	2.98	14.68	3.04	14.97	3.07	15.25	3.10	15.83	3.16	16.42	3.22
							16	13.32	3.00	13.88	3.06	14.44	3.12	14.73	3.15	15.02	3.18	15.60	3.24	16.18	3.30
							18	13.08	3.08	13.64	3.14	14.20	3.20	14.49	3.23	14.78	3.26	15.36	3.32	15.95	3.38
							20	12.84	3.16	13.40	3.22	13.96	3.28	14.25	3.31	14.54	3.34	15.12	3.40	15.71	3.46
							21	12.72	3.20	13.28	3.26	13.84	3.32	14.13	3.35	14.42	3.38	15.00	3.44	15.59	3.50
							23	12.48	3.28	13.04	3.34	13.61	3.40	13.89	3.43	14.18	3.46	14.77	3.53	15.36	3.59
							25	12.24	3.36	12.80	3.42	13.37	3.49	13.66	3.52	13.94	3.55	14.53	3.61	15.12	3.67
							27	12.00	3.45	12.56	3.51	13.13	3.57	13.42	3.60	13.71	3.63	14.29	3.70	14.89	3.76
							29	11.76	3.53	12.32	3.60	12.89	3.66	13.18	3.69	13.47	3.72	14.06	3.78	14.66	3.85
							31	11.52	3.62	12.09	3.68	12.66	3.75	12.95	3.78	13.24	3.81	13.83	3.87	14.42	3.94
							33	11.29	3.71	11.85	3.77	12.42	3.84	12.71	3.87	13.00	3.90	13.59	3.96	14.19	4.03
							35	11.05	3.80	11.61	3.86	12.19	3.93	12.50	3.95	12.77	3.99	13.36	4.05	13.96	4.12
							37	10.81	3.89	11.38	3.95	11.95	4.02	12.24	4.05	12.54	4.08	13.13	4.15	13.73	4.21
							39	10.58	3.98	11.14	4.05	11.72	4.11	12.01	4.14	12.30	4.18	12.90	4.24	13.50	4.31
							42	10.22	4.12	10.79	4.19	11.37	4.26	11.66	4.29	11.96	4.32	12.55	4.39	13.15	4.45
							44	9.99	4.22	10.56	4.29	11.14	4.35	11.43	4.39	11.72	4.42	12.32	4.48	12.92	4.55
							46	9.76	4.32	10.33	4.38	10.91	4.45	11.20	4.48	11.49	4.52	12.09	4.58	12.69	4.65

12. Capacity Table

12-6. AJ125TXJ5KH/EA

COOLING

Combination (Capacity Index)					Combination (Total)	Combination (%)	Outdoor Temperature (°C,DB)	Indoor Temperature (°F, WB)													
								14		16		18		19		20		22		24	
								TC(kW)	PI(kW)	TC(kW)	PI(kW)	TC(kW)	PI(kW)	TC(kW)	PI(kW)	TC(kW)	PI(kW)	TC(kW)	PI(kW)	TC(kW)	PI(kW)
2500	2500	3500	3500		12000	86%	10	10.69	2.75	15.08	2.82	15.37	2.88	15.54	2.92	15.73	2.95	16.17	3.01	16.69	3.07
							12	10.69	2.82	14.67	2.89	14.98	2.95	15.16	2.98	15.36	3.02	15.82	3.08	16.36	3.14
							14	10.69	2.89	14.28	2.96	14.61	3.02	14.80	3.05	15.01	3.09	15.49	3.15	16.05	3.21
							16	10.69	2.96	13.90	3.03	14.25	3.10	14.45	3.13	14.68	3.16	15.18	3.22	15.76	3.28
							18	10.69	3.04	13.54	3.10	13.91	3.17	14.13	3.20	14.36	3.23	14.88	3.30	15.48	3.35
							20	10.69	3.11	13.20	3.18	13.59	3.25	13.81	3.28	14.06	3.31	14.60	3.37	15.22	3.43
							21	10.69	3.15	13.03	3.22	13.44	3.29	13.66	3.32	13.91	3.35	14.47	3.41	15.10	3.47
							23	10.69	3.23	12.72	3.30	13.14	3.37	13.38	3.40	13.64	3.43	14.21	3.49	14.87	3.55
							25	10.69	3.31	12.42	3.38	12.86	3.45	13.11	3.48	13.38	3.51	13.97	3.57	14.65	3.63
							27	10.69	3.40	12.13	3.47	12.59	3.53	12.85	3.56	13.13	3.59	13.75	3.65	14.45	3.71
							29	10.69	3.49	11.86	3.55	12.35	3.62	12.62	3.65	12.91	3.68	13.55	3.74	14.26	3.80
							31	10.69	3.57	11.61	3.64	12.12	3.71	12.40	3.74	12.70	3.77	13.36	3.83	14.10	3.89
							33	10.69	3.67	11.38	3.73	11.91	3.80	12.20	3.83	12.51	3.86	13.19	3.92	13.95	3.97
							35	10.69	3.76	11.16	3.82	11.71	3.89	12.10	3.91	12.33	3.95	13.03	4.01	13.81	4.07
							37	10.69	3.85	10.96	3.92	11.53	3.98	11.84	4.01	12.17	4.04	12.90	4.10	13.70	4.16
							39	10.69	3.95	10.78	4.02	11.37	4.08	11.69	4.11	12.03	4.14	12.78	4.20	13.60	4.26
							42	10.69	4.10	10.54	4.17	11.16	4.23	11.49	4.26	11.85	4.29	12.63	4.35	13.48	4.40
							44	10.69	4.20	10.39	4.27	11.03	4.33	11.38	4.36	11.75	4.39	12.55	4.45	13.42	4.50
							46	10.69	4.31	10.27	4.37	10.93	4.43	11.29	4.46	11.67	4.49	12.49	4.55	13.38	4.61
2500	2500	3500	5000		13500	96%	10	13.61	2.74	14.14	2.80	14.68	2.86	14.96	2.89	15.23	2.92	15.79	2.98	16.36	3.04
							12	13.37	2.82	13.90	2.88	14.45	2.93	14.72	2.96	15.00	2.99	15.56	3.05	16.13	3.11
							14	13.13	2.89	13.67	2.95	14.21	3.01	14.49	3.04	14.77	3.07	15.33	3.13	15.90	3.19
							16	12.90	2.97	13.44	3.03	13.98	3.09	14.26	3.12	14.53	3.15	15.10	3.21	15.67	3.27
							18	12.66	3.05	13.20	3.11	13.75	3.17	14.03	3.20	14.30	3.23	14.87	3.29	15.44	3.35
							20	12.43	3.12	12.97	3.18	13.52	3.25	13.79	3.28	14.07	3.31	14.64	3.37	15.21	3.43
							21	12.31	3.16	12.85	3.22	13.40	3.29	13.68	3.32	13.96	3.35	14.52	3.41	15.09	3.47
							23	12.08	3.25	12.62	3.31	13.17	3.37	13.45	3.40	13.73	3.43	14.29	3.49	14.87	3.55
							25	11.85	3.33	12.39	3.39	12.94	3.45	13.22	3.48	13.50	3.51	14.06	3.57	14.64	3.63
							27	11.62	3.41	12.16	3.47	12.71	3.54	12.99	3.57	13.27	3.60	13.84	3.66	14.41	3.72
							29	11.39	3.50	11.93	3.56	12.48	3.62	12.76	3.65	13.04	3.68	13.61	3.75	14.19	3.81
							31	11.15	3.58	11.70	3.65	12.25	3.71	12.53	3.74	12.81	3.77	13.38	3.83	13.96	3.90
							33	10.92	3.67	11.47	3.73	12.02	3.80	12.30	3.83	12.59	3.86	13.16	3.92	13.74	3.99
							35	10.70	3.76	11.24	3.82	11.80	3.89	12.10	3.91	12.36	3.95	12.93	4.01	13.51	4.08
							37	10.47	3.85	11.01	3.91	11.57	3.98	11.85	4.01	12.14	4.04	12.71	4.11	13.29	4.17
							39	10.24	3.94	10.79	4.01	11.34	4.07	11.63	4.10	11.91	4.13	12.48	4.20	13.06	4.26
							42	9.90	4.08	10.45	4.15	11.01	4.21	11.29	4.24	11.57	4.28	12.15	4.34	12.73	4.41
							44	9.67	4.18	10.22	4.24	10.78	4.31	11.06	4.34	11.35	4.37	11.93	4.44	12.51	4.50
							46	9.44	4.27	10.00	4.34	10.56	4.41	10.84	4.44	11.13	4.47	11.70	4.54	12.29	4.60

12. Capacity Table

12-6. AJ125TXJ5KH/EA

COOLING

Combination (Capacity Index)					Combination (Total)	Combination (%)	Outdoor Temperature (°C,DB)	Indoor Temperature (°F, WB)													
								14		16		18		19		20		22		24	
								TC(kW)	PI(kW)	TC(kW)	PI(kW)	TC(kW)	PI(kW)	TC(kW)	PI(kW)	TC(kW)	PI(kW)	TC(kW)	PI(kW)	TC(kW)	PI(kW)
2500	2500	3500	6800		15300	109%	10	14.05	2.77	14.61	2.83	15.17	2.89	15.45	2.92	15.74	2.95	16.31	3.01	16.90	3.07
							12	13.81	2.85	14.36	2.91	14.93	2.96	15.21	2.99	15.50	3.02	16.07	3.08	16.66	3.14
							14	13.57	2.92	14.12	2.98	14.68	3.04	14.97	3.07	15.25	3.10	15.83	3.16	16.42	3.22
							16	13.32	3.00	13.88	3.06	14.44	3.12	14.73	3.15	15.02	3.18	15.60	3.24	16.18	3.30
							18	13.08	3.08	13.64	3.14	14.20	3.20	14.49	3.23	14.78	3.26	15.36	3.32	15.95	3.38
							20	12.84	3.16	13.40	3.22	13.96	3.28	14.25	3.31	14.54	3.34	15.12	3.40	15.71	3.46
							21	12.72	3.20	13.28	3.26	13.84	3.32	14.13	3.35	14.42	3.38	15.00	3.44	15.59	3.50
							23	12.48	3.28	13.04	3.34	13.61	3.40	13.89	3.43	14.18	3.46	14.77	3.53	15.36	3.59
							25	12.24	3.36	12.80	3.42	13.37	3.49	13.66	3.52	13.94	3.55	14.53	3.61	15.12	3.67
							27	12.00	3.45	12.56	3.51	13.13	3.57	13.42	3.60	13.71	3.63	14.29	3.70	14.89	3.76
							29	11.76	3.53	12.32	3.60	12.89	3.66	13.18	3.69	13.47	3.72	14.06	3.78	14.66	3.85
							31	11.52	3.62	12.09	3.68	12.66	3.75	12.95	3.78	13.24	3.81	13.83	3.87	14.42	3.94
							33	11.29	3.71	11.85	3.77	12.42	3.84	12.71	3.87	13.00	3.90	13.59	3.96	14.19	4.03
							35	11.05	3.80	11.61	3.86	12.19	3.93	12.50	3.95	12.77	3.99	13.36	4.05	13.96	4.12
							37	10.81	3.89	11.38	3.95	11.95	4.02	12.24	4.05	12.54	4.08	13.13	4.15	13.73	4.21
							39	10.58	3.98	11.14	4.05	11.72	4.11	12.01	4.14	12.30	4.18	12.90	4.24	13.50	4.31
							42	10.22	4.12	10.79	4.19	11.37	4.26	11.66	4.29	11.96	4.32	12.55	4.39	13.15	4.45
							44	9.99	4.22	10.56	4.29	11.14	4.35	11.43	4.39	11.72	4.42	12.32	4.48	12.92	4.55
							46	9.76	4.32	10.33	4.38	10.91	4.45	11.20	4.48	11.49	4.52	12.09	4.58	12.69	4.65
2500	2500	5000	5000		15000	107%	10	14.05	2.77	14.61	2.83	15.17	2.89	15.45	2.92	15.74	2.95	16.31	3.01	16.90	3.07
							12	13.81	2.85	14.36	2.91	14.93	2.96	15.21	2.99	15.50	3.02	16.07	3.08	16.66	3.14
							14	13.57	2.92	14.12	2.98	14.68	3.04	14.97	3.07	15.25	3.10	15.83	3.16	16.42	3.22
							16	13.32	3.00	13.88	3.06	14.44	3.12	14.73	3.15	15.02	3.18	15.60	3.24	16.18	3.30
							18	13.08	3.08	13.64	3.14	14.20	3.20	14.49	3.23	14.78	3.26	15.36	3.32	15.95	3.38
							20	12.84	3.16	13.40	3.22	13.96	3.28	14.25	3.31	14.54	3.34	15.12	3.40	15.71	3.46
							21	12.72	3.20	13.28	3.26	13.84	3.32	14.13	3.35	14.42	3.38	15.00	3.44	15.59	3.50
							23	12.48	3.28	13.04	3.34	13.61	3.40	13.89	3.43	14.18	3.46	14.77	3.53	15.36	3.59
							25	12.24	3.36	12.80	3.42	13.37	3.49	13.66	3.52	13.94	3.55	14.53	3.61	15.12	3.67
							27	12.00	3.45	12.56	3.51	13.13	3.57	13.42	3.60	13.71	3.63	14.29	3.70	14.89	3.76
							29	11.76	3.53	12.32	3.60	12.89	3.66	13.18	3.69	13.47	3.72	14.06	3.78	14.66	3.85
							31	11.52	3.62	12.09	3.68	12.66	3.75	12.95	3.78	13.24	3.81	13.83	3.87	14.42	3.94
							33	11.29	3.71	11.85	3.77	12.42	3.84	12.71	3.87	13.00	3.90	13.59	3.96	14.19	4.03
							35	11.05	3.80	11.61	3.86	12.19	3.93	12.50	3.95	12.77	3.99	13.36	4.05	13.96	4.12
							37	10.81	3.89	11.38	3.95	11.95	4.02	12.24	4.05	12.54	4.08	13.13	4.15	13.73	4.21
							39	10.58	3.98	11.14	4.05	11.72	4.11	12.01	4.14	12.30	4.18	12.90	4.24	13.50	4.31
							42	10.22	4.12	10.79	4.19	11.37	4.26	11.66	4.29	11.96	4.32	12.55	4.39	13.15	4.45
							44	9.99	4.22	10.56	4.29	11.14	4.35	11.43	4.39	11.72	4.42	12.32	4.48	12.92	4.55
							46	9.76	4.32	10.33	4.38	10.91	4.45	11.20	4.48	11.49	4.52	12.09	4.58	12.69	4.65

12. Capacity Table

12-6. AJ125TXJ5KH/EA

COOLING

Combination (Capacity Index)					Combination (Total)	Combination (%)	Outdoor Temperature (°C,DB)	Indoor Temperature (°F, WB)													
								14		16		18		19		20		22		24	
								TC(kW)	PI(kW)	TC(kW)	PI(kW)	TC(kW)	PI(kW)	TC(kW)	PI(kW)	TC(kW)	PI(kW)	TC(kW)	PI(kW)	TC(kW)	PI(kW)
2500	2500	5000	6800		16800	120%	10	14.05	2.77	14.61	2.83	15.17	2.89	15.45	2.92	15.74	2.95	16.31	3.01	16.90	3.07
							12	13.81	2.85	14.36	2.91	14.93	2.96	15.21	2.99	15.50	3.02	16.07	3.08	16.66	3.14
							14	13.57	2.92	14.12	2.98	14.68	3.04	14.97	3.07	15.25	3.10	15.83	3.16	16.42	3.22
							16	13.32	3.00	13.88	3.06	14.44	3.12	14.73	3.15	15.02	3.18	15.60	3.24	16.18	3.30
							18	13.08	3.08	13.64	3.14	14.20	3.20	14.49	3.23	14.78	3.26	15.36	3.32	15.95	3.38
							20	12.84	3.16	13.40	3.22	13.96	3.28	14.25	3.31	14.54	3.34	15.12	3.40	15.71	3.46
							21	12.72	3.20	13.28	3.26	13.84	3.32	14.13	3.35	14.42	3.38	15.00	3.44	15.59	3.50
							23	12.48	3.28	13.04	3.34	13.61	3.40	13.89	3.43	14.18	3.46	14.77	3.53	15.36	3.59
							25	12.24	3.36	12.80	3.42	13.37	3.49	13.66	3.52	13.94	3.55	14.53	3.61	15.12	3.67
							27	12.00	3.45	12.56	3.51	13.13	3.57	13.42	3.60	13.71	3.63	14.29	3.70	14.89	3.76
							29	11.76	3.53	12.32	3.60	12.89	3.66	13.18	3.69	13.47	3.72	14.06	3.78	14.66	3.85
							31	11.52	3.62	12.09	3.68	12.66	3.75	12.95	3.78	13.24	3.81	13.83	3.87	14.42	3.94
							33	11.29	3.71	11.85	3.77	12.42	3.84	12.71	3.87	13.00	3.90	13.59	3.96	14.19	4.03
							35	11.05	3.80	11.61	3.86	12.19	3.93	12.50	3.95	12.77	3.99	13.36	4.05	13.96	4.12
							37	10.81	3.89	11.38	3.95	11.95	4.02	12.24	4.05	12.54	4.08	13.13	4.15	13.73	4.21
							39	10.58	3.98	11.14	4.05	11.72	4.11	12.01	4.14	12.30	4.18	12.90	4.24	13.50	4.31
							42	10.22	4.12	10.79	4.19	11.37	4.26	11.66	4.29	11.96	4.32	12.55	4.39	13.15	4.45
							44	9.99	4.22	10.56	4.29	11.14	4.35	11.43	4.39	11.72	4.42	12.32	4.48	12.92	4.55
							46	9.76	4.32	10.33	4.38	10.91	4.45	11.20	4.48	11.49	4.52	12.09	4.58	12.69	4.65
2500	3500	3500	3500		13000	93%	10	10.69	2.75	15.08	2.82	15.37	2.88	15.54	2.92	15.73	2.95	16.17	3.01	16.69	3.07
							12	10.69	2.82	14.67	2.89	14.98	2.95	15.16	2.98	15.36	3.02	15.82	3.08	16.36	3.14
							14	10.69	2.89	14.28	2.96	14.61	3.02	14.80	3.05	15.01	3.09	15.49	3.15	16.05	3.21
							16	10.69	2.96	13.90	3.03	14.25	3.10	14.45	3.13	14.68	3.16	15.18	3.22	15.76	3.28
							18	10.69	3.04	13.54	3.10	13.91	3.17	14.13	3.20	14.36	3.23	14.88	3.30	15.48	3.35
							20	10.69	3.11	13.20	3.18	13.59	3.25	13.81	3.28	14.06	3.31	14.60	3.37	15.22	3.43
							21	10.69	3.15	13.03	3.22	13.44	3.29	13.66	3.32	13.91	3.35	14.47	3.41	15.10	3.47
							23	10.69	3.23	12.72	3.30	13.14	3.37	13.38	3.40	13.64	3.43	14.21	3.49	14.87	3.55
							25	10.69	3.31	12.42	3.38	12.86	3.45	13.11	3.48	13.38	3.51	13.97	3.57	14.65	3.63
							27	10.69	3.40	12.13	3.47	12.59	3.53	12.85	3.56	13.13	3.59	13.75	3.65	14.45	3.71
							29	10.69	3.49	11.86	3.55	12.35	3.62	12.62	3.65	12.91	3.68	13.55	3.74	14.26	3.80
							31	10.69	3.57	11.61	3.64	12.12	3.71	12.40	3.74	12.70	3.77	13.36	3.83	14.10	3.89
							33	10.69	3.67	11.38	3.73	11.91	3.80	12.20	3.83	12.51	3.86	13.19	3.92	13.95	3.97
							35	10.69	3.76	11.16	3.82	11.71	3.89	12.10	3.91	12.33	3.95	13.03	4.01	13.81	4.07
							37	10.69	3.85	10.96	3.92	11.53	3.98	11.84	4.01	12.17	4.04	12.90	4.10	13.70	4.16
							39	10.69	3.95	10.78	4.02	11.37	4.08	11.69	4.11	12.03	4.14	12.78	4.20	13.60	4.26
							42	10.69	4.10	10.54	4.17	11.16	4.23	11.49	4.26	11.85	4.29	12.63	4.35	13.48	4.40
							44	10.69	4.20	10.39	4.27	11.03	4.33	11.38	4.36	11.75	4.39	12.55	4.45	13.42	4.50
							46	10.69	4.31	10.27	4.37	10.93	4.43	11.29	4.46	11.67	4.49	12.49	4.55	13.38	4.61

12. Capacity Table

12-6. AJ125TXJ5KH/EA

COOLING

Combination (Capacity Index)					Combination (Total)	Combination (%)	Outdoor Temperature (°C,DB)	Indoor Temperature (°F, WB)													
								14		16		18		19		20		22		24	
								TC(kW)	PI(kW)	TC(kW)	PI(kW)	TC(kW)	PI(kW)	TC(kW)	PI(kW)	TC(kW)	PI(kW)	TC(kW)	PI(kW)	TC(kW)	PI(kW)
2500	3500	3500	5000		14500	104%	10	14.05	2.77	14.61	2.83	15.17	2.89	15.45	2.92	15.74	2.95	16.31	3.01	16.90	3.07
							12	13.81	2.85	14.36	2.91	14.93	2.96	15.21	2.99	15.50	3.02	16.07	3.08	16.66	3.14
							14	13.57	2.92	14.12	2.98	14.68	3.04	14.97	3.07	15.25	3.10	15.83	3.16	16.42	3.22
							16	13.32	3.00	13.88	3.06	14.44	3.12	14.73	3.15	15.02	3.18	15.60	3.24	16.18	3.30
							18	13.08	3.08	13.64	3.14	14.20	3.20	14.49	3.23	14.78	3.26	15.36	3.32	15.95	3.38
							20	12.84	3.16	13.40	3.22	13.96	3.28	14.25	3.31	14.54	3.34	15.12	3.40	15.71	3.46
							21	12.72	3.20	13.28	3.26	13.84	3.32	14.13	3.35	14.42	3.38	15.00	3.44	15.59	3.50
							23	12.48	3.28	13.04	3.34	13.61	3.40	13.89	3.43	14.18	3.46	14.77	3.53	15.36	3.59
							25	12.24	3.36	12.80	3.42	13.37	3.49	13.66	3.52	13.94	3.55	14.53	3.61	15.12	3.67
							27	12.00	3.45	12.56	3.51	13.13	3.57	13.42	3.60	13.71	3.63	14.29	3.70	14.89	3.76
							29	11.76	3.53	12.32	3.60	12.89	3.66	13.18	3.69	13.47	3.72	14.06	3.78	14.66	3.85
							31	11.52	3.62	12.09	3.68	12.66	3.75	12.95	3.78	13.24	3.81	13.83	3.87	14.42	3.94
							33	11.29	3.71	11.85	3.77	12.42	3.84	12.71	3.87	13.00	3.90	13.59	3.96	14.19	4.03
							35	11.05	3.80	11.61	3.86	12.19	3.93	12.50	3.95	12.77	3.99	13.36	4.05	13.96	4.12
							37	10.81	3.89	11.38	3.95	11.95	4.02	12.24	4.05	12.54	4.08	13.13	4.15	13.73	4.21
							39	10.58	3.98	11.14	4.05	11.72	4.11	12.01	4.14	12.30	4.18	12.90	4.24	13.50	4.31
							42	10.22	4.12	10.79	4.19	11.37	4.26	11.66	4.29	11.96	4.32	12.55	4.39	13.15	4.45
							44	9.99	4.22	10.56	4.29	11.14	4.35	11.43	4.39	11.72	4.42	12.32	4.48	12.92	4.55
							46	9.76	4.32	10.33	4.38	10.91	4.45	11.20	4.48	11.49	4.52	12.09	4.58	12.69	4.65
2500	3500	3500	6800		16300	116%	10	14.05	2.77	14.61	2.83	15.17	2.89	15.45	2.92	15.74	2.95	16.31	3.01	16.90	3.07
							12	13.81	2.85	14.36	2.91	14.93	2.96	15.21	2.99	15.50	3.02	16.07	3.08	16.66	3.14
							14	13.57	2.92	14.12	2.98	14.68	3.04	14.97	3.07	15.25	3.10	15.83	3.16	16.42	3.22
							16	13.32	3.00	13.88	3.06	14.44	3.12	14.73	3.15	15.02	3.18	15.60	3.24	16.18	3.30
							18	13.08	3.08	13.64	3.14	14.20	3.20	14.49	3.23	14.78	3.26	15.36	3.32	15.95	3.38
							20	12.84	3.16	13.40	3.22	13.96	3.28	14.25	3.31	14.54	3.34	15.12	3.40	15.71	3.46
							21	12.72	3.20	13.28	3.26	13.84	3.32	14.13	3.35	14.42	3.38	15.00	3.44	15.59	3.50
							23	12.48	3.28	13.04	3.34	13.61	3.40	13.89	3.43	14.18	3.46	14.77	3.53	15.36	3.59
							25	12.24	3.36	12.80	3.42	13.37	3.49	13.66	3.52	13.94	3.55	14.53	3.61	15.12	3.67
							27	12.00	3.45	12.56	3.51	13.13	3.57	13.42	3.60	13.71	3.63	14.29	3.70	14.89	3.76
							29	11.76	3.53	12.32	3.60	12.89	3.66	13.18	3.69	13.47	3.72	14.06	3.78	14.66	3.85
							31	11.52	3.62	12.09	3.68	12.66	3.75	12.95	3.78	13.24	3.81	13.83	3.87	14.42	3.94
							33	11.29	3.71	11.85	3.77	12.42	3.84	12.71	3.87	13.00	3.90	13.59	3.96	14.19	4.03
							35	11.05	3.80	11.61	3.86	12.19	3.93	12.50	3.95	12.77	3.99	13.36	4.05	13.96	4.12
							37	10.81	3.89	11.38	3.95	11.95	4.02	12.24	4.05	12.54	4.08	13.13	4.15	13.73	4.21
							39	10.58	3.98	11.14	4.05	11.72	4.11	12.01	4.14	12.30	4.18	12.90	4.24	13.50	4.31
							42	10.22	4.12	10.79	4.19	11.37	4.26	11.66	4.29	11.96	4.32	12.55	4.39	13.15	4.45
							44	9.99	4.22	10.56	4.29	11.14	4.35	11.43	4.39	11.72	4.42	12.32	4.48	12.92	4.55
							46	9.76	4.32	10.33	4.38	10.91	4.45	11.20	4.48	11.49	4.52	12.09	4.58	12.69	4.65

12. Capacity Table

12-6. AJ125TXJ5KH/EA

COOLING

Combination (Capacity Index)					Combination (Total)	Combination (%)	Outdoor Temperature (°C,DB)	Indoor Temperature (°F, WB)													
								14		16		18		19		20		22		24	
								TC(kW)	PI(kW)	TC(kW)	PI(kW)	TC(kW)	PI(kW)	TC(kW)	PI(kW)	TC(kW)	PI(kW)	TC(kW)	PI(kW)	TC(kW)	PI(kW)
2500	3500	5000	5000		16000	114%	10	14.05	2.77	14.61	2.83	15.17	2.89	15.45	2.92	15.74	2.95	16.31	3.01	16.90	3.07
							12	13.81	2.85	14.36	2.91	14.93	2.96	15.21	2.99	15.50	3.02	16.07	3.08	16.66	3.14
							14	13.57	2.92	14.12	2.98	14.68	3.04	14.97	3.07	15.25	3.10	15.83	3.16	16.42	3.22
							16	13.32	3.00	13.88	3.06	14.44	3.12	14.73	3.15	15.02	3.18	15.60	3.24	16.18	3.30
							18	13.08	3.08	13.64	3.14	14.20	3.20	14.49	3.23	14.78	3.26	15.36	3.32	15.95	3.38
							20	12.84	3.16	13.40	3.22	13.96	3.28	14.25	3.31	14.54	3.34	15.12	3.40	15.71	3.46
							21	12.72	3.20	13.28	3.26	13.84	3.32	14.13	3.35	14.42	3.38	15.00	3.44	15.59	3.50
							23	12.48	3.28	13.04	3.34	13.61	3.40	13.89	3.43	14.18	3.46	14.77	3.53	15.36	3.59
							25	12.24	3.36	12.80	3.42	13.37	3.49	13.66	3.52	13.94	3.55	14.53	3.61	15.12	3.67
							27	12.00	3.45	12.56	3.51	13.13	3.57	13.42	3.60	13.71	3.63	14.29	3.70	14.89	3.76
							29	11.76	3.53	12.32	3.60	12.89	3.66	13.18	3.69	13.47	3.72	14.06	3.78	14.66	3.85
							31	11.52	3.62	12.09	3.68	12.66	3.75	12.95	3.78	13.24	3.81	13.83	3.87	14.42	3.94
							33	11.29	3.71	11.85	3.77	12.42	3.84	12.71	3.87	13.00	3.90	13.59	3.96	14.19	4.03
							35	11.05	3.80	11.61	3.86	12.19	3.93	12.50	3.95	12.77	3.99	13.36	4.05	13.96	4.12
							37	10.81	3.89	11.38	3.95	11.95	4.02	12.24	4.05	12.54	4.08	13.13	4.15	13.73	4.21
							39	10.58	3.98	11.14	4.05	11.72	4.11	12.01	4.14	12.30	4.18	12.90	4.24	13.50	4.31
							42	10.22	4.12	10.79	4.19	11.37	4.26	11.66	4.29	11.96	4.32	12.55	4.39	13.15	4.45
							44	9.99	4.22	10.56	4.29	11.14	4.35	11.43	4.39	11.72	4.42	12.32	4.48	12.92	4.55
							46	9.76	4.32	10.33	4.38	10.91	4.45	11.20	4.48	11.49	4.52	12.09	4.58	12.69	4.65
2500	5000	5000	5000		17500	125%	10	14.05	2.77	14.61	2.83	15.17	2.89	15.45	2.92	15.74	2.95	16.31	3.01	16.90	3.07
							12	13.81	2.85	14.36	2.91	14.93	2.96	15.21	2.99	15.50	3.02	16.07	3.08	16.66	3.14
							14	13.57	2.92	14.12	2.98	14.68	3.04	14.97	3.07	15.25	3.10	15.83	3.16	16.42	3.22
							16	13.32	3.00	13.88	3.06	14.44	3.12	14.73	3.15	15.02	3.18	15.60	3.24	16.18	3.30
							18	13.08	3.08	13.64	3.14	14.20	3.20	14.49	3.23	14.78	3.26	15.36	3.32	15.95	3.38
							20	12.84	3.16	13.40	3.22	13.96	3.28	14.25	3.31	14.54	3.34	15.12	3.40	15.71	3.46
							21	12.72	3.20	13.28	3.26	13.84	3.32	14.13	3.35	14.42	3.38	15.00	3.44	15.59	3.50
							23	12.48	3.28	13.04	3.34	13.61	3.40	13.89	3.43	14.18	3.46	14.77	3.53	15.36	3.59
							25	12.24	3.36	12.80	3.42	13.37	3.49	13.66	3.52	13.94	3.55	14.53	3.61	15.12	3.67
							27	12.00	3.45	12.56	3.51	13.13	3.57	13.42	3.60	13.71	3.63	14.29	3.70	14.89	3.76
							29	11.76	3.53	12.32	3.60	12.89	3.66	13.18	3.69	13.47	3.72	14.06	3.78	14.66	3.85
							31	11.52	3.62	12.09	3.68	12.66	3.75	12.95	3.78	13.24	3.81	13.83	3.87	14.42	3.94
							33	11.29	3.71	11.85	3.77	12.42	3.84	12.71	3.87	13.00	3.90	13.59	3.96	14.19	4.03
							35	11.05	3.80	11.61	3.86	12.19	3.93	12.50	3.95	12.77	3.99	13.36	4.05	13.96	4.12
							37	10.81	3.89	11.38	3.95	11.95	4.02	12.24	4.05	12.54	4.08	13.13	4.15	13.73	4.21
							39	10.58	3.98	11.14	4.05	11.72	4.11	12.01	4.14	12.30	4.18	12.90	4.24	13.50	4.31
							42	10.22	4.12	10.79	4.19	11.37	4.26	11.66	4.29	11.96	4.32	12.55	4.39	13.15	4.45
							44	9.99	4.22	10.56	4.29	11.14	4.35	11.43	4.39	11.72	4.42	12.32	4.48	12.92	4.55
							46	9.76	4.32	10.33	4.38	10.91	4.45	11.20	4.48	11.49	4.52	12.09	4.58	12.69	4.65

12. Capacity Table

12-6. AJ125TXJ5KH/EA

COOLING

Combination (Capacity Index)					Combination (Total)	Combination (%)	Outdoor Temperature (°C,DB)	Indoor Temperature (°F, WB)													
								14		16		18		19		20		22		24	
								TC(kW)	PI(kW)	TC(kW)	PI(kW)	TC(kW)	PI(kW)	TC(kW)	PI(kW)	TC(kW)	PI(kW)	TC(kW)	PI(kW)	TC(kW)	PI(kW)
3500	3500	3500	3500		14000	100%	10	13.61	2.74	14.14	2.80	14.68	2.86	14.96	2.89	15.23	2.92	15.79	2.98	16.36	3.04
							12	13.37	2.82	13.90	2.88	14.45	2.93	14.72	2.96	15.00	2.99	15.56	3.05	16.13	3.11
							14	13.13	2.89	13.67	2.95	14.21	3.01	14.49	3.04	14.77	3.07	15.33	3.13	15.90	3.19
							16	12.90	2.97	13.44	3.03	13.98	3.09	14.26	3.12	14.53	3.15	15.10	3.21	15.67	3.27
							18	12.66	3.05	13.20	3.11	13.75	3.17	14.03	3.20	14.30	3.23	14.87	3.29	15.44	3.35
							20	12.43	3.12	12.97	3.18	13.52	3.25	13.79	3.28	14.07	3.31	14.64	3.37	15.21	3.43
							21	12.31	3.16	12.85	3.22	13.40	3.29	13.68	3.32	13.96	3.35	14.52	3.41	15.09	3.47
							23	12.08	3.25	12.62	3.31	13.17	3.37	13.45	3.40	13.73	3.43	14.29	3.49	14.87	3.55
							25	11.85	3.33	12.39	3.39	12.94	3.45	13.22	3.48	13.50	3.51	14.06	3.57	14.64	3.63
							27	11.62	3.41	12.16	3.47	12.71	3.54	12.99	3.57	13.27	3.60	13.84	3.66	14.41	3.72
							29	11.39	3.50	11.93	3.56	12.48	3.62	12.76	3.65	13.04	3.68	13.61	3.75	14.19	3.81
							31	11.15	3.58	11.70	3.65	12.25	3.71	12.53	3.74	12.81	3.77	13.38	3.83	13.96	3.90
							33	10.92	3.67	11.47	3.73	12.02	3.80	12.30	3.83	12.59	3.86	13.16	3.92	13.74	3.99
							35	10.70	3.76	11.24	3.82	11.80	3.89	12.10	3.91	12.36	3.95	12.93	4.01	13.51	4.08
							37	10.47	3.85	11.01	3.91	11.57	3.98	11.85	4.01	12.14	4.04	12.71	4.11	13.29	4.17
							39	10.24	3.94	10.79	4.01	11.34	4.07	11.63	4.10	11.91	4.13	12.48	4.20	13.06	4.26
							42	9.90	4.08	10.45	4.15	11.01	4.21	11.29	4.24	11.57	4.28	12.15	4.34	12.73	4.41
							44	9.67	4.18	10.22	4.24	10.78	4.31	11.06	4.34	11.35	4.37	11.93	4.44	12.51	4.50
							46	9.44	4.27	10.00	4.34	10.56	4.41	10.84	4.44	11.13	4.47	11.70	4.54	12.29	4.60
3500	3500	3500	5000		15500	111%	10	14.05	2.77	14.61	2.83	15.17	2.89	15.45	2.92	15.74	2.95	16.31	3.01	16.90	3.07
							12	13.81	2.85	14.36	2.91	14.93	2.96	15.21	2.99	15.50	3.02	16.07	3.08	16.66	3.14
							14	13.57	2.92	14.12	2.98	14.68	3.04	14.97	3.07	15.25	3.10	15.83	3.16	16.42	3.22
							16	13.32	3.00	13.88	3.06	14.44	3.12	14.73	3.15	15.02	3.18	15.60	3.24	16.18	3.30
							18	13.08	3.08	13.64	3.14	14.20	3.20	14.49	3.23	14.78	3.26	15.36	3.32	15.95	3.38
							20	12.84	3.16	13.40	3.22	13.96	3.28	14.25	3.31	14.54	3.34	15.12	3.40	15.71	3.46
							21	12.72	3.20	13.28	3.26	13.84	3.32	14.13	3.35	14.42	3.38	15.00	3.44	15.59	3.50
							23	12.48	3.28	13.04	3.34	13.61	3.40	13.89	3.43	14.18	3.46	14.77	3.53	15.36	3.59
							25	12.24	3.36	12.80	3.42	13.37	3.49	13.66	3.52	13.94	3.55	14.53	3.61	15.12	3.67
							27	12.00	3.45	12.56	3.51	13.13	3.57	13.42	3.60	13.71	3.63	14.29	3.70	14.89	3.76
							29	11.76	3.53	12.32	3.60	12.89	3.66	13.18	3.69	13.47	3.72	14.06	3.78	14.66	3.85
							31	11.52	3.62	12.09	3.68	12.66	3.75	12.95	3.78	13.24	3.81	13.83	3.87	14.42	3.94
							33	11.29	3.71	11.85	3.77	12.42	3.84	12.71	3.87	13.00	3.90	13.59	3.96	14.19	4.03
							35	11.05	3.80	11.61	3.86	12.19	3.93	12.50	3.95	12.77	3.99	13.36	4.05	13.96	4.12
							37	10.81	3.89	11.38	3.95	11.95	4.02	12.24	4.05	12.54	4.08	13.13	4.15	13.73	4.21
							39	10.58	3.98	11.14	4.05	11.72	4.11	12.01	4.14	12.30	4.18	12.90	4.24	13.50	4.31
							42	10.22	4.12	10.79	4.19	11.37	4.26	11.66	4.29	11.96	4.32	12.55	4.39	13.15	4.45
							44	9.99	4.22	10.56	4.29	11.14	4.35	11.43	4.39	11.72	4.42	12.32	4.48	12.92	4.55
							46	9.76	4.32	10.33	4.38	10.91	4.45	11.20	4.48	11.49	4.52	12.09	4.58	12.69	4.65

12. Capacity Table

12-6. AJ125TXJ5KH/EA

COOLING

Combination (Capacity Index)					Combination (Total)	Combination (%)	Outdoor Temperature (°C,DB)	Indoor Temperature (°F, WB)													
								14		16		18		19		20		22		24	
								TC(kW)	PI(kW)	TC(kW)	PI(kW)	TC(kW)	PI(kW)	TC(kW)	PI(kW)	TC(kW)	PI(kW)	TC(kW)	PI(kW)	TC(kW)	PI(kW)
3500	3500	3500	6800		17300	124%	10	14.05	2.77	14.61	2.83	15.17	2.89	15.45	2.92	15.74	2.95	16.31	3.01	16.90	3.07
							12	13.81	2.85	14.36	2.91	14.93	2.96	15.21	2.99	15.50	3.02	16.07	3.08	16.66	3.14
							14	13.57	2.92	14.12	2.98	14.68	3.04	14.97	3.07	15.25	3.10	15.83	3.16	16.42	3.22
							16	13.32	3.00	13.88	3.06	14.44	3.12	14.73	3.15	15.02	3.18	15.60	3.24	16.18	3.30
							18	13.08	3.08	13.64	3.14	14.20	3.20	14.49	3.23	14.78	3.26	15.36	3.32	15.95	3.38
							20	12.84	3.16	13.40	3.22	13.96	3.28	14.25	3.31	14.54	3.34	15.12	3.40	15.71	3.46
							21	12.72	3.20	13.28	3.26	13.84	3.32	14.13	3.35	14.42	3.38	15.00	3.44	15.59	3.50
							23	12.48	3.28	13.04	3.34	13.61	3.40	13.89	3.43	14.18	3.46	14.77	3.53	15.36	3.59
							25	12.24	3.36	12.80	3.42	13.37	3.49	13.66	3.52	13.94	3.55	14.53	3.61	15.12	3.67
							27	12.00	3.45	12.56	3.51	13.13	3.57	13.42	3.60	13.71	3.63	14.29	3.70	14.89	3.76
							29	11.76	3.53	12.32	3.60	12.89	3.66	13.18	3.69	13.47	3.72	14.06	3.78	14.66	3.85
							31	11.52	3.62	12.09	3.68	12.66	3.75	12.95	3.78	13.24	3.81	13.83	3.87	14.42	3.94
							33	11.29	3.71	11.85	3.77	12.42	3.84	12.71	3.87	13.00	3.90	13.59	3.96	14.19	4.03
							35	11.05	3.80	11.61	3.86	12.19	3.93	12.50	3.95	12.77	3.99	13.36	4.05	13.96	4.12
							37	10.81	3.89	11.38	3.95	11.95	4.02	12.24	4.05	12.54	4.08	13.13	4.15	13.73	4.21
							39	10.58	3.98	11.14	4.05	11.72	4.11	12.01	4.14	12.30	4.18	12.90	4.24	13.50	4.31
							42	10.22	4.12	10.79	4.19	11.37	4.26	11.66	4.29	11.96	4.32	12.55	4.39	13.15	4.45
							44	9.99	4.22	10.56	4.29	11.14	4.35	11.43	4.39	11.72	4.42	12.32	4.48	12.92	4.55
							46	9.76	4.32	10.33	4.38	10.91	4.45	11.20	4.48	11.49	4.52	12.09	4.58	12.69	4.65
3500	3500	5000	5000		17000	121%	10	14.05	2.77	14.61	2.83	15.17	2.89	15.45	2.92	15.74	2.95	16.31	3.01	16.90	3.07
							12	13.81	2.85	14.36	2.91	14.93	2.96	15.21	2.99	15.50	3.02	16.07	3.08	16.66	3.14
							14	13.57	2.92	14.12	2.98	14.68	3.04	14.97	3.07	15.25	3.10	15.83	3.16	16.42	3.22
							16	13.32	3.00	13.88	3.06	14.44	3.12	14.73	3.15	15.02	3.18	15.60	3.24	16.18	3.30
							18	13.08	3.08	13.64	3.14	14.20	3.20	14.49	3.23	14.78	3.26	15.36	3.32	15.95	3.38
							20	12.84	3.16	13.40	3.22	13.96	3.28	14.25	3.31	14.54	3.34	15.12	3.40	15.71	3.46
							21	12.72	3.20	13.28	3.26	13.84	3.32	14.13	3.35	14.42	3.38	15.00	3.44	15.59	3.50
							23	12.48	3.28	13.04	3.34	13.61	3.40	13.89	3.43	14.18	3.46	14.77	3.53	15.36	3.59
							25	12.24	3.36	12.80	3.42	13.37	3.49	13.66	3.52	13.94	3.55	14.53	3.61	15.12	3.67
							27	12.00	3.45	12.56	3.51	13.13	3.57	13.42	3.60	13.71	3.63	14.29	3.70	14.89	3.76
							29	11.76	3.53	12.32	3.60	12.89	3.66	13.18	3.69	13.47	3.72	14.06	3.78	14.66	3.85
							31	11.52	3.62	12.09	3.68	12.66	3.75	12.95	3.78	13.24	3.81	13.83	3.87	14.42	3.94
							33	11.29	3.71	11.85	3.77	12.42	3.84	12.71	3.87	13.00	3.90	13.59	3.96	14.19	4.03
							35	11.05	3.80	11.61	3.86	12.19	3.93	12.50	3.95	12.77	3.99	13.36	4.05	13.96	4.12
							37	10.81	3.89	11.38	3.95	11.95	4.02	12.24	4.05	12.54	4.08	13.13	4.15	13.73	4.21
							39	10.58	3.98	11.14	4.05	11.72	4.11	12.01	4.14	12.30	4.18	12.90	4.24	13.50	4.31
							42	10.22	4.12	10.79	4.19	11.37	4.26	11.66	4.29	11.96	4.32	12.55	4.39	13.15	4.45
							44	9.99	4.22	10.56	4.29	11.14	4.35	11.43	4.39	11.72	4.42	12.32	4.48	12.92	4.55
							46	9.76	4.32	10.33	4.38	10.91	4.45	11.20	4.48	11.49	4.52	12.09	4.58	12.69	4.65

12. Capacity Table

12-6. AJ125TXJ5KH/EA

COOLING

Combination (Capacity Index)					Combination (Total)	Combination (%)	Outdoor Temperature (°C,DB)	Indoor Temperature (°F, WB)													
								14		16		18		19		20		22		24	
								TC(kW)	PI(kW)	TC(kW)	PI(kW)	TC(kW)	PI(kW)	TC(kW)	PI(kW)	TC(kW)	PI(kW)	TC(kW)	PI(kW)	TC(kW)	PI(kW)
2000	2000	2000	2000	2000	10000	71%	10	9.07	2.34	12.79	2.40	13.03	2.46	13.18	2.48	13.34	2.51	13.71	2.56	14.15	2.62
							12	9.07	2.40	12.44	2.46	12.70	2.51	12.86	2.54	13.03	2.57	13.42	2.62	13.87	2.67
							14	9.07	2.46	12.11	2.52	12.39	2.57	12.55	2.60	12.73	2.63	13.14	2.68	13.61	2.73
							16	9.07	2.52	11.79	2.58	12.08	2.64	12.26	2.66	12.44	2.69	12.87	2.74	13.36	2.79
							18	9.07	2.58	11.48	2.64	11.80	2.70	11.98	2.73	12.18	2.75	12.62	2.81	13.13	2.86
							20	9.07	2.65	11.19	2.71	11.52	2.76	11.71	2.79	11.92	2.82	12.38	2.87	12.91	2.92
							21	9.07	2.68	11.05	2.74	11.39	2.80	11.59	2.83	11.80	2.85	12.27	2.90	12.80	2.95
							23	9.07	2.75	10.78	2.81	11.14	2.87	11.34	2.89	11.56	2.92	12.05	2.97	12.60	3.02
							25	9.07	2.82	10.53	2.88	10.90	2.94	11.11	2.96	11.34	2.99	11.85	3.04	12.42	3.09
							27	9.07	2.90	10.29	2.95	10.68	3.01	10.90	3.03	11.14	3.06	11.66	3.11	12.25	3.16
							29	9.07	2.97	10.06	3.03	10.47	3.08	10.70	3.11	10.95	3.13	11.49	3.19	12.09	3.23
							31	9.07	3.04	9.85	3.10	10.28	3.16	10.51	3.18	10.77	3.21	11.33	3.26	11.95	3.31
							33	9.07	3.12	9.65	3.18	10.09	3.23	10.34	3.26	10.61	3.29	11.18	3.34	11.82	3.38
							35	9.07	3.20	9.47	3.26	9.93	3.31	10.26	3.33	10.46	3.36	11.05	3.41	11.71	3.46
							37	9.07	3.28	9.30	3.34	9.78	3.39	10.04	3.42	10.32	3.44	10.94	3.49	11.61	3.54
							39	9.07	3.36	9.14	3.42	9.64	3.47	9.91	3.50	10.20	3.53	10.83	3.58	11.53	3.62
							42	9.07	3.49	8.93	3.55	9.46	3.60	9.75	3.63	10.05	3.65	10.71	3.70	11.43	3.75
							44	9.07	3.58	8.81	3.63	9.36	3.69	9.65	3.71	9.97	3.74	10.64	3.79	11.38	3.84
							46	9.07	3.67	8.71	3.72	9.27	3.78	9.57	3.80	9.90	3.83	10.59	3.88	11.34	3.92
2000	2000	2000	2000	2500	10500	75%	10	9.58	2.85	13.51	2.92	13.77	2.99	13.92	3.03	14.09	3.06	14.49	3.13	14.95	3.19
							12	9.58	2.92	13.15	3.00	13.42	3.07	13.58	3.10	13.76	3.13	14.18	3.20	14.66	3.26
							14	9.58	3.00	12.79	3.07	13.09	3.14	13.26	3.17	13.45	3.21	13.88	3.27	14.38	3.33
							16	9.58	3.07	12.46	3.14	12.77	3.21	12.95	3.25	13.15	3.28	13.60	3.34	14.12	3.41
							18	9.58	3.15	12.13	3.22	12.46	3.29	12.65	3.32	12.86	3.36	13.33	3.42	13.87	3.48
							20	9.58	3.23	11.83	3.30	12.17	3.37	12.38	3.40	12.59	3.44	13.08	3.50	13.64	3.56
							21	9.58	3.27	11.68	3.34	12.04	3.41	12.24	3.44	12.46	3.48	12.96	3.54	13.53	3.60
							23	9.58	3.36	11.39	3.43	11.77	3.49	11.98	3.53	12.22	3.56	12.73	3.62	13.32	3.68
							25	9.58	3.44	11.12	3.51	11.52	3.58	11.74	3.61	11.98	3.65	12.52	3.71	13.12	3.77
							27	9.58	3.53	10.87	3.60	11.28	3.67	11.52	3.70	11.77	3.73	12.32	3.79	12.94	3.85
							29	9.58	3.62	10.63	3.69	11.06	3.76	11.30	3.79	11.56	3.82	12.14	3.88	12.78	3.94
							31	9.58	3.71	10.40	3.78	10.86	3.85	11.11	3.88	11.38	3.91	11.97	3.97	12.63	4.03
							33	9.58	3.81	10.19	3.88	10.67	3.94	10.93	3.97	11.21	4.01	11.81	4.07	12.49	4.13
							35	9.58	3.90	10.00	3.97	10.49	4.04	10.84	4.06	11.05	4.10	11.68	4.16	12.37	4.22
							37	9.58	4.00	9.82	4.07	10.33	4.14	10.61	4.17	10.91	4.20	11.55	4.26	12.27	4.32
							39	9.58	4.10	9.66	4.17	10.18	4.24	10.47	4.27	10.78	4.30	11.45	4.36	12.18	4.42
							42	9.58	4.26	9.44	4.32	9.99	4.39	10.30	4.42	10.62	4.45	11.31	4.51	12.07	4.57
							44	9.58	4.36	9.31	4.43	9.89	4.50	10.20	4.53	10.53	4.56	11.24	4.62	12.02	4.68
							46	9.58	4.47	9.20	4.54	9.79	4.60	10.11	4.64	10.45	4.67	11.19	4.73	11.99	4.78

12. Capacity Table

12-6. AJ125TXJ5KH/EA

COOLING

Combination (Capacity Index)					Combination (Total)	Combination (%)	Outdoor Temperature (°C,DB)	Indoor Temperature (°F, WB)													
								14		16		18		19		20		22		24	
								TC(kW)	PI(kW)	TC(kW)	PI(kW)	TC(kW)	PI(kW)	TC(kW)	PI(kW)	TC(kW)	PI(kW)	TC(kW)	PI(kW)	TC(kW)	PI(kW)
2000	2000	2000	2000	3500	11500	82%	10	10.36	2.89	14.61	2.96	14.89	3.03	15.05	3.07	15.24	3.10	15.66	3.16	16.17	3.23
							12	10.36	2.96	14.21	3.03	14.51	3.10	14.69	3.14	14.88	3.17	15.33	3.24	15.85	3.30
							14	10.36	3.03	13.83	3.11	14.15	3.18	14.34	3.21	14.54	3.24	15.01	3.31	15.55	3.37
							16	10.36	3.11	13.47	3.18	13.80	3.25	14.00	3.29	14.22	3.32	14.70	3.39	15.26	3.45
							18	10.36	3.19	13.12	3.26	13.48	3.33	13.68	3.37	13.91	3.40	14.41	3.46	15.00	3.53
							20	10.36	3.27	12.79	3.34	13.16	3.41	13.38	3.45	13.62	3.48	14.14	3.54	14.75	3.61
							21	10.36	3.31	12.63	3.38	13.01	3.45	13.24	3.49	13.48	3.52	14.01	3.58	14.63	3.65
							23	10.36	3.40	12.32	3.47	12.73	3.54	12.96	3.57	13.21	3.60	13.77	3.67	14.40	3.73
							25	10.36	3.48	12.03	3.56	12.45	3.62	12.70	3.66	12.96	3.69	13.54	3.75	14.19	3.81
							27	10.36	3.57	11.75	3.64	12.20	3.71	12.45	3.75	12.72	3.78	13.32	3.84	13.99	3.90
							29	10.36	3.66	11.49	3.73	11.96	3.80	12.22	3.84	12.50	3.87	13.12	3.93	13.82	3.99
							31	10.36	3.76	11.25	3.83	11.74	3.90	12.01	3.93	12.30	3.96	12.94	4.02	13.65	4.08
							33	10.36	3.85	11.02	3.92	11.53	3.99	11.81	4.02	12.12	4.06	12.77	4.12	13.51	4.18
							35	10.36	3.95	10.81	4.02	11.34	4.09	11.72	4.11	11.95	4.15	12.62	4.21	13.38	4.27
							37	10.36	4.05	10.62	4.12	11.17	4.19	11.47	4.22	11.79	4.25	12.49	4.31	13.27	4.37
							39	10.36	4.15	10.44	4.22	11.01	4.29	11.32	4.32	11.65	4.35	12.37	4.41	13.17	4.47
							42	10.36	4.31	10.20	4.38	10.80	4.44	11.13	4.48	11.48	4.51	12.23	4.57	13.05	4.63
							44	10.36	4.42	10.07	4.49	10.69	4.55	11.03	4.58	11.38	4.61	12.15	4.68	13.00	4.73
							46	10.36	4.53	9.95	4.59	10.59	4.66	10.94	4.69	11.30	4.72	12.09	4.78	12.96	4.84
2000	2000	2000	2000	5000	13000	93%	10	11.05	2.78	15.58	2.85	15.88	2.91	16.06	2.95	16.25	2.98	16.71	3.04	17.24	3.10
							12	11.05	2.84	15.16	2.91	15.48	2.98	15.66	3.02	15.87	3.05	16.35	3.11	16.90	3.17
							14	11.05	2.92	14.75	2.99	15.09	3.05	15.29	3.09	15.51	3.12	16.01	3.18	16.58	3.24
							16	11.05	2.99	14.36	3.06	14.72	3.13	14.93	3.16	15.16	3.19	15.68	3.25	16.28	3.31
							18	11.05	3.07	13.99	3.14	14.37	3.20	14.59	3.23	14.83	3.27	15.37	3.33	15.99	3.39
							20	11.05	3.14	13.64	3.21	14.04	3.28	14.27	3.31	14.52	3.34	15.08	3.41	15.73	3.47
							21	11.05	3.18	13.47	3.25	13.88	3.32	14.12	3.35	14.37	3.38	14.95	3.45	15.60	3.50
							23	11.05	3.27	13.14	3.33	13.57	3.40	13.82	3.43	14.09	3.46	14.68	3.53	15.36	3.58
							25	11.05	3.35	12.83	3.42	13.28	3.48	13.54	3.51	13.82	3.55	14.44	3.61	15.13	3.67
							27	11.05	3.43	12.53	3.50	13.01	3.57	13.28	3.60	13.57	3.63	14.21	3.69	14.92	3.75
							29	11.05	3.52	12.26	3.59	12.76	3.65	13.04	3.69	13.34	3.72	14.00	3.78	14.73	3.84
							31	11.05	3.61	12.00	3.68	12.52	3.74	12.81	3.78	13.12	3.81	13.80	3.87	14.56	3.92
							33	11.05	3.70	11.76	3.77	12.30	3.83	12.60	3.87	12.92	3.90	13.62	3.96	14.41	4.02
							35	11.05	3.80	11.53	3.86	12.10	3.93	12.50	3.95	12.74	3.99	13.46	4.05	14.27	4.11
							37	11.05	3.89	11.32	3.96	11.91	4.02	12.23	4.05	12.58	4.09	13.32	4.15	14.15	4.20
							39	11.05	3.99	11.14	4.06	11.74	4.12	12.08	4.15	12.43	4.18	13.20	4.24	14.05	4.30
							42	11.05	4.14	10.88	4.21	11.52	4.27	11.87	4.30	12.24	4.33	13.04	4.39	13.92	4.45
							44	11.05	4.24	10.74	4.31	11.40	4.37	11.76	4.40	12.14	4.43	12.96	4.49	13.86	4.55
							46	11.05	4.35	10.61	4.42	11.29	4.48	11.66	4.51	12.06	4.54	12.90	4.60	13.82	4.65

12. Capacity Table

12-6. AJ125TXJ5KH/EA

COOLING

Combination (Capacity Index)					Combination (Total)	Combination (%)	Outdoor Temperature (°C,DB)	Indoor Temperature (°F, WB)													
								14		16		18		19		20		22		24	
								TC(kW)	PI(kW)	TC(kW)	PI(kW)	TC(kW)	PI(kW)	TC(kW)	PI(kW)	TC(kW)	PI(kW)	TC(kW)	PI(kW)	TC(kW)	PI(kW)
2000	2000	2000	2000	6800	14800	106%	10	14.05	2.77	14.61	2.83	15.17	2.89	15.45	2.92	15.74	2.95	16.31	3.01	16.90	3.07
							12	13.81	2.85	14.36	2.91	14.93	2.96	15.21	2.99	15.50	3.02	16.07	3.08	16.66	3.14
							14	13.57	2.92	14.12	2.98	14.68	3.04	14.97	3.07	15.25	3.10	15.83	3.16	16.42	3.22
							16	13.32	3.00	13.88	3.06	14.44	3.12	14.73	3.15	15.02	3.18	15.60	3.24	16.18	3.30
							18	13.08	3.08	13.64	3.14	14.20	3.20	14.49	3.23	14.78	3.26	15.36	3.32	15.95	3.38
							20	12.84	3.16	13.40	3.22	13.96	3.28	14.25	3.31	14.54	3.34	15.12	3.40	15.71	3.46
							21	12.72	3.20	13.28	3.26	13.84	3.32	14.13	3.35	14.42	3.38	15.00	3.44	15.59	3.50
							23	12.48	3.28	13.04	3.34	13.61	3.40	13.89	3.43	14.18	3.46	14.77	3.53	15.36	3.59
							25	12.24	3.36	12.80	3.42	13.37	3.49	13.66	3.52	13.94	3.55	14.53	3.61	15.12	3.67
							27	12.00	3.45	12.56	3.51	13.13	3.57	13.42	3.60	13.71	3.63	14.29	3.70	14.89	3.76
							29	11.76	3.53	12.32	3.60	12.89	3.66	13.18	3.69	13.47	3.72	14.06	3.78	14.66	3.85
							31	11.52	3.62	12.09	3.68	12.66	3.75	12.95	3.78	13.24	3.81	13.83	3.87	14.42	3.94
							33	11.29	3.71	11.85	3.77	12.42	3.84	12.71	3.87	13.00	3.90	13.59	3.96	14.19	4.03
							35	11.05	3.80	11.61	3.86	12.19	3.93	12.50	3.95	12.77	3.99	13.36	4.05	13.96	4.12
							37	10.81	3.89	11.38	3.95	11.95	4.02	12.24	4.05	12.54	4.08	13.13	4.15	13.73	4.21
							39	10.58	3.98	11.14	4.05	11.72	4.11	12.01	4.14	12.30	4.18	12.90	4.24	13.50	4.31
							42	10.22	4.12	10.79	4.19	11.37	4.26	11.66	4.29	11.96	4.32	12.55	4.39	13.15	4.45
							44	9.99	4.22	10.56	4.29	11.14	4.35	11.43	4.39	11.72	4.42	12.32	4.48	12.92	4.55
							46	9.76	4.32	10.33	4.38	10.91	4.45	11.20	4.48	11.49	4.52	12.09	4.58	12.69	4.65
2000	2000	2000	2500	2500	11000	79%	10	10.10	2.87	14.25	2.95	14.52	3.02	14.68	3.05	14.86	3.08	15.28	3.15	15.77	3.21
							12	10.10	2.95	13.86	3.02	14.15	3.09	14.32	3.12	14.51	3.16	14.95	3.22	15.46	3.28
							14	10.10	3.02	13.49	3.09	13.80	3.16	13.98	3.20	14.18	3.23	14.64	3.29	15.16	3.36
							16	10.10	3.10	13.13	3.17	13.46	3.24	13.65	3.27	13.86	3.30	14.34	3.37	14.89	3.43
							18	10.10	3.17	12.79	3.25	13.14	3.32	13.34	3.35	13.56	3.38	14.06	3.45	14.63	3.51
							20	10.10	3.26	12.47	3.33	12.84	3.40	13.05	3.43	13.28	3.46	13.79	3.53	14.38	3.59
							21	10.10	3.30	12.31	3.37	12.69	3.44	12.91	3.47	13.14	3.50	13.67	3.57	14.26	3.63
							23	10.10	3.38	12.01	3.45	12.41	3.52	12.64	3.55	12.88	3.59	13.43	3.65	14.04	3.71
							25	10.10	3.47	11.73	3.54	12.15	3.61	12.38	3.64	12.64	3.67	13.20	3.74	13.84	3.80
							27	10.10	3.56	11.46	3.63	11.90	3.69	12.14	3.73	12.41	3.76	12.99	3.82	13.65	3.88
							29	10.10	3.65	11.21	3.72	11.66	3.78	11.92	3.82	12.19	3.85	12.80	3.91	13.47	3.97
							31	10.10	3.74	10.97	3.81	11.45	3.88	11.71	3.91	12.00	3.94	12.62	4.00	13.32	4.06
							33	10.10	3.83	10.75	3.90	11.25	3.97	11.52	4.00	11.82	4.04	12.46	4.10	13.17	4.16
							35	10.10	3.93	10.54	4.00	11.06	4.07	11.43	4.09	11.65	4.13	12.31	4.19	13.05	4.25
							37	10.10	4.03	10.36	4.10	10.89	4.17	11.19	4.20	11.50	4.23	12.18	4.29	12.94	4.35
							39	10.10	4.13	10.18	4.20	10.74	4.27	11.04	4.30	11.37	4.33	12.07	4.39	12.84	4.45
							42	10.10	4.29	9.95	4.36	10.54	4.42	10.86	4.45	11.20	4.49	11.93	4.55	12.73	4.61
							44	10.10	4.40	9.82	4.46	10.42	4.53	10.75	4.56	11.10	4.59	11.85	4.65	12.68	4.71
							46	10.10	4.50	9.70	4.57	10.33	4.64	10.67	4.67	11.02	4.70	11.79	4.76	12.64	4.82

12. Capacity Table

12-6. AJ125TXJ5KH/EA

COOLING

Combination (Capacity Index)					Combination (Total)	Combination (%)	Outdoor Temperature (°C,DB)	Indoor Temperature (°F, WB)													
								14		16		18		19		20		22		24	
								TC(kW)	PI(kW)	TC(kW)	PI(kW)	TC(kW)	PI(kW)	TC(kW)	PI(kW)	TC(kW)	PI(kW)	TC(kW)	PI(kW)	TC(kW)	PI(kW)
2000	2000	2000	2500	3500	12000	86%	10	10.88	2.91	15.35	2.98	15.64	3.05	15.81	3.09	16.01	3.12	16.45	3.19	16.98	3.25
							12	10.88	2.98	14.93	3.05	15.24	3.13	15.43	3.16	15.63	3.19	16.10	3.26	16.65	3.32
							14	10.88	3.06	14.53	3.13	14.86	3.20	15.06	3.23	15.27	3.27	15.76	3.33	16.33	3.40
							16	10.88	3.13	14.14	3.21	14.50	3.28	14.71	3.31	14.93	3.35	15.44	3.41	16.03	3.47
							18	10.88	3.21	13.78	3.29	14.15	3.36	14.37	3.39	14.61	3.42	15.14	3.49	15.75	3.55
							20	10.88	3.30	13.43	3.37	13.83	3.44	14.05	3.47	14.30	3.50	14.85	3.57	15.49	3.63
							21	10.88	3.34	13.26	3.41	13.67	3.48	13.90	3.51	14.15	3.55	14.72	3.61	15.36	3.67
							23	10.88	3.42	12.94	3.49	13.37	3.56	13.61	3.60	13.87	3.63	14.46	3.69	15.12	3.76
							25	10.88	3.51	12.63	3.58	13.08	3.65	13.34	3.68	13.61	3.72	14.22	3.78	14.90	3.84
							27	10.88	3.60	12.34	3.67	12.81	3.74	13.08	3.77	13.36	3.81	13.99	3.87	14.70	3.93
							29	10.88	3.69	12.07	3.76	12.56	3.83	12.84	3.86	13.13	3.90	13.78	3.96	14.51	4.02
							31	10.88	3.78	11.81	3.86	12.33	3.92	12.61	3.96	12.92	3.99	13.59	4.05	14.34	4.11
							33	10.88	3.88	11.58	3.95	12.11	4.02	12.41	4.05	12.73	4.08	13.42	4.15	14.19	4.21
							35	10.88	3.98	11.36	4.05	11.91	4.12	12.31	4.14	12.55	4.18	13.26	4.25	14.05	4.31
							37	10.88	4.08	11.15	4.15	11.73	4.22	12.05	4.25	12.39	4.28	13.12	4.34	13.93	4.40
							39	10.88	4.18	10.97	4.25	11.56	4.32	11.89	4.35	12.24	4.38	13.00	4.45	13.83	4.51
							42	10.88	4.34	10.72	4.41	11.35	4.48	11.69	4.51	12.06	4.54	12.85	4.60	13.71	4.66
							44	10.88	4.45	10.57	4.52	11.23	4.58	11.58	4.62	11.96	4.65	12.77	4.71	13.65	4.77
							46	10.88	4.56	10.45	4.63	11.12	4.69	11.49	4.73	11.87	4.76	12.70	4.82	13.61	4.88
2000	2000	2000	2500	5000	13500	96%	10	14.05	2.77	14.61	2.83	15.17	2.89	15.45	2.92	15.74	2.95	16.31	3.01	16.90	3.07
							12	13.81	2.85	14.36	2.91	14.93	2.96	15.21	2.99	15.50	3.02	16.07	3.08	16.66	3.14
							14	13.57	2.92	14.12	2.98	14.68	3.04	14.97	3.07	15.25	3.10	15.83	3.16	16.42	3.22
							16	13.32	3.00	13.88	3.06	14.44	3.12	14.73	3.15	15.02	3.18	15.60	3.24	16.18	3.30
							18	13.08	3.08	13.64	3.14	14.20	3.20	14.49	3.23	14.78	3.26	15.36	3.32	15.95	3.38
							20	12.84	3.16	13.40	3.22	13.96	3.28	14.25	3.31	14.54	3.34	15.12	3.40	15.71	3.46
							21	12.72	3.20	13.28	3.26	13.84	3.32	14.13	3.35	14.42	3.38	15.00	3.44	15.59	3.50
							23	12.48	3.28	13.04	3.34	13.61	3.40	13.89	3.43	14.18	3.46	14.77	3.53	15.36	3.59
							25	12.24	3.36	12.80	3.42	13.37	3.49	13.66	3.52	13.94	3.55	14.53	3.61	15.12	3.67
							27	12.00	3.45	12.56	3.51	13.13	3.57	13.42	3.60	13.71	3.63	14.29	3.70	14.89	3.76
							29	11.76	3.53	12.32	3.60	12.89	3.66	13.18	3.69	13.47	3.72	14.06	3.78	14.66	3.85
							31	11.52	3.62	12.09	3.68	12.66	3.75	12.95	3.78	13.24	3.81	13.83	3.87	14.42	3.94
							33	11.29	3.71	11.85	3.77	12.42	3.84	12.71	3.87	13.00	3.90	13.59	3.96	14.19	4.03
							35	11.05	3.80	11.61	3.86	12.19	3.93	12.50	3.95	12.77	3.99	13.36	4.05	13.96	4.12
							37	10.81	3.89	11.38	3.95	11.95	4.02	12.24	4.05	12.54	4.08	13.13	4.15	13.73	4.21
							39	10.58	3.98	11.14	4.05	11.72	4.11	12.01	4.14	12.30	4.18	12.90	4.24	13.50	4.31
							42	10.22	4.12	10.79	4.19	11.37	4.26	11.66	4.29	11.96	4.32	12.55	4.39	13.15	4.45
							44	9.99	4.22	10.56	4.29	11.14	4.35	11.43	4.39	11.72	4.42	12.32	4.48	12.92	4.55
							46	9.76	4.32	10.33	4.38	10.91	4.45	11.20	4.48	11.49	4.52	12.09	4.58	12.69	4.65

12. Capacity Table

12-6. AJ125TXJ5KH/EA

COOLING

Combination (Capacity Index)					Combination (Total)	Combination (%)	Outdoor Temperature (°C,DB)	Indoor Temperature (°F, WB)													
								14		16		18		19		20		22		24	
								TC(kW)	PI(kW)	TC(kW)	PI(kW)	TC(kW)	PI(kW)	TC(kW)	PI(kW)	TC(kW)	PI(kW)	TC(kW)	PI(kW)	TC(kW)	PI(kW)
2000	2000	2000	2500	6800	15300	109%	10	14.05	2.77	14.61	2.83	15.17	2.89	15.45	2.92	15.74	2.95	16.31	3.01	16.90	3.07
							12	13.81	2.85	14.36	2.91	14.93	2.96	15.21	2.99	15.50	3.02	16.07	3.08	16.66	3.14
							14	13.57	2.92	14.12	2.98	14.68	3.04	14.97	3.07	15.25	3.10	15.83	3.16	16.42	3.22
							16	13.32	3.00	13.88	3.06	14.44	3.12	14.73	3.15	15.02	3.18	15.60	3.24	16.18	3.30
							18	13.08	3.08	13.64	3.14	14.20	3.20	14.49	3.23	14.78	3.26	15.36	3.32	15.95	3.38
							20	12.84	3.16	13.40	3.22	13.96	3.28	14.25	3.31	14.54	3.34	15.12	3.40	15.71	3.46
							21	12.72	3.20	13.28	3.26	13.84	3.32	14.13	3.35	14.42	3.38	15.00	3.44	15.59	3.50
							23	12.48	3.28	13.04	3.34	13.61	3.40	13.89	3.43	14.18	3.46	14.77	3.53	15.36	3.59
							25	12.24	3.36	12.80	3.42	13.37	3.49	13.66	3.52	13.94	3.55	14.53	3.61	15.12	3.67
							27	12.00	3.45	12.56	3.51	13.13	3.57	13.42	3.60	13.71	3.63	14.29	3.70	14.89	3.76
							29	11.76	3.53	12.32	3.60	12.89	3.66	13.18	3.69	13.47	3.72	14.06	3.78	14.66	3.85
							31	11.52	3.62	12.09	3.68	12.66	3.75	12.95	3.78	13.24	3.81	13.83	3.87	14.42	3.94
							33	11.29	3.71	11.85	3.77	12.42	3.84	12.71	3.87	13.00	3.90	13.59	3.96	14.19	4.03
							35	11.05	3.80	11.61	3.86	12.19	3.93	12.50	3.95	12.77	3.99	13.36	4.05	13.96	4.12
							37	10.81	3.89	11.38	3.95	11.95	4.02	12.24	4.05	12.54	4.08	13.13	4.15	13.73	4.21
							39	10.58	3.98	11.14	4.05	11.72	4.11	12.01	4.14	12.30	4.18	12.90	4.24	13.50	4.31
							42	10.22	4.12	10.79	4.19	11.37	4.26	11.66	4.29	11.96	4.32	12.55	4.39	13.15	4.45
							44	9.99	4.22	10.56	4.29	11.14	4.35	11.43	4.39	11.72	4.42	12.32	4.48	12.92	4.55
							46	9.76	4.32	10.33	4.38	10.91	4.45	11.20	4.48	11.49	4.52	12.09	4.58	12.69	4.65
2000	2000	2000	3500	3500	13000	93%	10	11.05	2.78	15.58	2.85	15.88	2.91	16.06	2.95	16.25	2.98	16.71	3.04	17.24	3.10
							12	11.05	2.84	15.16	2.91	15.48	2.98	15.66	3.02	15.87	3.05	16.35	3.11	16.90	3.17
							14	11.05	2.92	14.75	2.99	15.09	3.05	15.29	3.09	15.51	3.12	16.01	3.18	16.58	3.24
							16	11.05	2.99	14.36	3.06	14.72	3.13	14.93	3.16	15.16	3.19	15.68	3.25	16.28	3.31
							18	11.05	3.07	13.99	3.14	14.37	3.20	14.59	3.23	14.83	3.27	15.37	3.33	15.99	3.39
							20	11.05	3.14	13.64	3.21	14.04	3.28	14.27	3.31	14.52	3.34	15.08	3.41	15.73	3.47
							21	11.05	3.18	13.47	3.25	13.88	3.32	14.12	3.35	14.37	3.38	14.95	3.45	15.60	3.50
							23	11.05	3.27	13.14	3.33	13.57	3.40	13.82	3.43	14.09	3.46	14.68	3.53	15.36	3.58
							25	11.05	3.35	12.83	3.42	13.28	3.48	13.54	3.51	13.82	3.55	14.44	3.61	15.13	3.67
							27	11.05	3.43	12.53	3.50	13.01	3.57	13.28	3.60	13.57	3.63	14.21	3.69	14.92	3.75
							29	11.05	3.52	12.26	3.59	12.76	3.65	13.04	3.69	13.34	3.72	14.00	3.78	14.73	3.84
							31	11.05	3.61	12.00	3.68	12.52	3.74	12.81	3.78	13.12	3.81	13.80	3.87	14.56	3.92
							33	11.05	3.70	11.76	3.77	12.30	3.83	12.60	3.87	12.92	3.90	13.62	3.96	14.41	4.02
							35	11.05	3.80	11.53	3.86	12.10	3.93	12.50	3.95	12.74	3.99	13.46	4.05	14.27	4.11
							37	11.05	3.89	11.32	3.96	11.91	4.02	12.23	4.05	12.58	4.09	13.32	4.15	14.15	4.20
							39	11.05	3.99	11.14	4.06	11.74	4.12	12.08	4.15	12.43	4.18	13.20	4.24	14.05	4.30
							42	11.05	4.14	10.88	4.21	11.52	4.27	11.87	4.30	12.24	4.33	13.04	4.39	13.92	4.45
							44	11.05	4.24	10.74	4.31	11.40	4.37	11.76	4.40	12.14	4.43	12.96	4.49	13.86	4.55
							46	11.05	4.35	10.61	4.42	11.29	4.48	11.66	4.51	12.06	4.54	12.90	4.60	13.82	4.65

12. Capacity Table

12-6. AJ125TXJ5KH/EA

COOLING

Combination (Capacity Index)					Combination (Total)	Combination (%)	Outdoor Temperature (°C,DB)	Indoor Temperature (°F, WB)													
								14		16		18		19		20		22		24	
								TC(kW)	PI(kW)	TC(kW)	PI(kW)	TC(kW)	PI(kW)	TC(kW)	PI(kW)	TC(kW)	PI(kW)	TC(kW)	PI(kW)	TC(kW)	PI(kW)
2000	2000	2000	3500	5000	14500	104%	10	14.05	2.77	14.61	2.83	15.17	2.89	15.45	2.92	15.74	2.95	16.31	3.01	16.90	3.07
							12	13.81	2.85	14.36	2.91	14.93	2.96	15.21	2.99	15.50	3.02	16.07	3.08	16.66	3.14
							14	13.57	2.92	14.12	2.98	14.68	3.04	14.97	3.07	15.25	3.10	15.83	3.16	16.42	3.22
							16	13.32	3.00	13.88	3.06	14.44	3.12	14.73	3.15	15.02	3.18	15.60	3.24	16.18	3.30
							18	13.08	3.08	13.64	3.14	14.20	3.20	14.49	3.23	14.78	3.26	15.36	3.32	15.95	3.38
							20	12.84	3.16	13.40	3.22	13.96	3.28	14.25	3.31	14.54	3.34	15.12	3.40	15.71	3.46
							21	12.72	3.20	13.28	3.26	13.84	3.32	14.13	3.35	14.42	3.38	15.00	3.44	15.59	3.50
							23	12.48	3.28	13.04	3.34	13.61	3.40	13.89	3.43	14.18	3.46	14.77	3.53	15.36	3.59
							25	12.24	3.36	12.80	3.42	13.37	3.49	13.66	3.52	13.94	3.55	14.53	3.61	15.12	3.67
							27	12.00	3.45	12.56	3.51	13.13	3.57	13.42	3.60	13.71	3.63	14.29	3.70	14.89	3.76
							29	11.76	3.53	12.32	3.60	12.89	3.66	13.18	3.69	13.47	3.72	14.06	3.78	14.66	3.85
							31	11.52	3.62	12.09	3.68	12.66	3.75	12.95	3.78	13.24	3.81	13.83	3.87	14.42	3.94
							33	11.29	3.71	11.85	3.77	12.42	3.84	12.71	3.87	13.00	3.90	13.59	3.96	14.19	4.03
							35	11.05	3.80	11.61	3.86	12.19	3.93	12.50	3.95	12.77	3.99	13.36	4.05	13.96	4.12
							37	10.81	3.89	11.38	3.95	11.95	4.02	12.24	4.05	12.54	4.08	13.13	4.15	13.73	4.21
							39	10.58	3.98	11.14	4.05	11.72	4.11	12.01	4.14	12.30	4.18	12.90	4.24	13.50	4.31
							42	10.22	4.12	10.79	4.19	11.37	4.26	11.66	4.29	11.96	4.32	12.55	4.39	13.15	4.45
							44	9.99	4.22	10.56	4.29	11.14	4.35	11.43	4.39	11.72	4.42	12.32	4.48	12.92	4.55
							46	9.76	4.32	10.33	4.38	10.91	4.45	11.20	4.48	11.49	4.52	12.09	4.58	12.69	4.65
2000	2000	2000	3500	6800	16300	116%	10	14.05	2.77	14.61	2.83	15.17	2.89	15.45	2.92	15.74	2.95	16.31	3.01	16.90	3.07
							12	13.81	2.85	14.36	2.91	14.93	2.96	15.21	2.99	15.50	3.02	16.07	3.08	16.66	3.14
							14	13.57	2.92	14.12	2.98	14.68	3.04	14.97	3.07	15.25	3.10	15.83	3.16	16.42	3.22
							16	13.32	3.00	13.88	3.06	14.44	3.12	14.73	3.15	15.02	3.18	15.60	3.24	16.18	3.30
							18	13.08	3.08	13.64	3.14	14.20	3.20	14.49	3.23	14.78	3.26	15.36	3.32	15.95	3.38
							20	12.84	3.16	13.40	3.22	13.96	3.28	14.25	3.31	14.54	3.34	15.12	3.40	15.71	3.46
							21	12.72	3.20	13.28	3.26	13.84	3.32	14.13	3.35	14.42	3.38	15.00	3.44	15.59	3.50
							23	12.48	3.28	13.04	3.34	13.61	3.40	13.89	3.43	14.18	3.46	14.77	3.53	15.36	3.59
							25	12.24	3.36	12.80	3.42	13.37	3.49	13.66	3.52	13.94	3.55	14.53	3.61	15.12	3.67
							27	12.00	3.45	12.56	3.51	13.13	3.57	13.42	3.60	13.71	3.63	14.29	3.70	14.89	3.76
							29	11.76	3.53	12.32	3.60	12.89	3.66	13.18	3.69	13.47	3.72	14.06	3.78	14.66	3.85
							31	11.52	3.62	12.09	3.68	12.66	3.75	12.95	3.78	13.24	3.81	13.83	3.87	14.42	3.94
							33	11.29	3.71	11.85	3.77	12.42	3.84	12.71	3.87	13.00	3.90	13.59	3.96	14.19	4.03
							35	11.05	3.80	11.61	3.86	12.19	3.93	12.50	3.95	12.77	3.99	13.36	4.05	13.96	4.12
							37	10.81	3.89	11.38	3.95	11.95	4.02	12.24	4.05	12.54	4.08	13.13	4.15	13.73	4.21
							39	10.58	3.98	11.14	4.05	11.72	4.11	12.01	4.14	12.30	4.18	12.90	4.24	13.50	4.31
							42	10.22	4.12	10.79	4.19	11.37	4.26	11.66	4.29	11.96	4.32	12.55	4.39	13.15	4.45
							44	9.99	4.22	10.56	4.29	11.14	4.35	11.43	4.39	11.72	4.42	12.32	4.48	12.92	4.55
							46	9.76	4.32	10.33	4.38	10.91	4.45	11.20	4.48	11.49	4.52	12.09	4.58	12.69	4.65

12. Capacity Table

12-6. AJ125TXJ5KH/EA

COOLING

Combination (Capacity Index)					Combination (Total)	Combination (%)	Outdoor Temperature (°C,DB)	Indoor Temperature (°F, WB)													
								14		16		18		19		20		22		24	
								TC(kW)	PI(kW)	TC(kW)	PI(kW)	TC(kW)	PI(kW)	TC(kW)	PI(kW)	TC(kW)	PI(kW)	TC(kW)	PI(kW)	TC(kW)	PI(kW)
2000	2000	2000	5000	5000	16000	114%	10	14.05	2.77	14.61	2.83	15.17	2.89	15.45	2.92	15.74	2.95	16.31	3.01	16.90	3.07
							12	13.81	2.85	14.36	2.91	14.93	2.96	15.21	2.99	15.50	3.02	16.07	3.08	16.66	3.14
							14	13.57	2.92	14.12	2.98	14.68	3.04	14.97	3.07	15.25	3.10	15.83	3.16	16.42	3.22
							16	13.32	3.00	13.88	3.06	14.44	3.12	14.73	3.15	15.02	3.18	15.60	3.24	16.18	3.30
							18	13.08	3.08	13.64	3.14	14.20	3.20	14.49	3.23	14.78	3.26	15.36	3.32	15.95	3.38
							20	12.84	3.16	13.40	3.22	13.96	3.28	14.25	3.31	14.54	3.34	15.12	3.40	15.71	3.46
							21	12.72	3.20	13.28	3.26	13.84	3.32	14.13	3.35	14.42	3.38	15.00	3.44	15.59	3.50
							23	12.48	3.28	13.04	3.34	13.61	3.40	13.89	3.43	14.18	3.46	14.77	3.53	15.36	3.59
							25	12.24	3.36	12.80	3.42	13.37	3.49	13.66	3.52	13.94	3.55	14.53	3.61	15.12	3.67
							27	12.00	3.45	12.56	3.51	13.13	3.57	13.42	3.60	13.71	3.63	14.29	3.70	14.89	3.76
							29	11.76	3.53	12.32	3.60	12.89	3.66	13.18	3.69	13.47	3.72	14.06	3.78	14.66	3.85
							31	11.52	3.62	12.09	3.68	12.66	3.75	12.95	3.78	13.24	3.81	13.83	3.87	14.42	3.94
							33	11.29	3.71	11.85	3.77	12.42	3.84	12.71	3.87	13.00	3.90	13.59	3.96	14.19	4.03
							35	11.05	3.80	11.61	3.86	12.19	3.93	12.50	3.95	12.77	3.99	13.36	4.05	13.96	4.12
							37	10.81	3.89	11.38	3.95	11.95	4.02	12.24	4.05	12.54	4.08	13.13	4.15	13.73	4.21
							39	10.58	3.98	11.14	4.05	11.72	4.11	12.01	4.14	12.30	4.18	12.90	4.24	13.50	4.31
							42	10.22	4.12	10.79	4.19	11.37	4.26	11.66	4.29	11.96	4.32	12.55	4.39	13.15	4.45
							44	9.99	4.22	10.56	4.29	11.14	4.35	11.43	4.39	11.72	4.42	12.32	4.48	12.92	4.55
							46	9.76	4.32	10.33	4.38	10.91	4.45	11.20	4.48	11.49	4.52	12.09	4.58	12.69	4.65
2000	2000	2500	2500	2500	11500	82%	10	10.62	2.89	14.98	2.96	15.27	3.03	15.44	3.07	15.63	3.10	16.07	3.16	16.58	3.23
							12	10.62	2.96	14.58	3.03	14.88	3.10	15.06	3.14	15.26	3.17	15.72	3.24	16.25	3.30
							14	10.62	3.03	14.19	3.11	14.51	3.18	14.70	3.21	14.91	3.24	15.39	3.31	15.95	3.37
							16	10.62	3.11	13.81	3.18	14.16	3.25	14.36	3.29	14.58	3.32	15.08	3.39	15.66	3.45
							18	10.62	3.19	13.45	3.26	13.82	3.33	14.03	3.37	14.26	3.40	14.78	3.46	15.38	3.53
							20	10.62	3.27	13.11	3.34	13.50	3.41	13.72	3.45	13.96	3.48	14.51	3.54	15.12	3.61
							21	10.62	3.31	12.95	3.38	13.35	3.45	13.57	3.49	13.82	3.52	14.37	3.58	15.00	3.65
							23	10.62	3.40	12.63	3.47	13.05	3.54	13.29	3.57	13.55	3.60	14.12	3.67	14.77	3.73
							25	10.62	3.48	12.33	3.56	12.77	3.62	13.02	3.66	13.29	3.69	13.88	3.75	14.55	3.81
							27	10.62	3.57	12.05	3.64	12.51	3.71	12.77	3.75	13.05	3.78	13.66	3.84	14.35	3.90
							29	10.62	3.66	11.79	3.73	12.27	3.80	12.54	3.84	12.82	3.87	13.46	3.93	14.17	3.99
							31	10.62	3.76	11.54	3.83	12.04	3.90	12.32	3.93	12.62	3.96	13.27	4.02	14.00	4.08
							33	10.62	3.85	11.30	3.92	11.83	3.99	12.12	4.02	12.43	4.06	13.10	4.12	13.85	4.18
							35	10.62	3.95	11.09	4.02	11.63	4.09	12.02	4.11	12.25	4.15	12.95	4.21	13.72	4.27
							37	10.62	4.05	10.89	4.12	11.45	4.19	11.76	4.22	12.09	4.25	12.81	4.31	13.60	4.37
							39	10.62	4.15	10.71	4.22	11.29	4.29	11.61	4.32	11.95	4.35	12.69	4.41	13.51	4.47
							42	10.62	4.31	10.47	4.38	11.08	4.44	11.42	4.48	11.77	4.51	12.54	4.57	13.39	4.63
							44	10.62	4.42	10.33	4.49	10.96	4.55	11.31	4.58	11.67	4.61	12.46	4.68	13.33	4.73
							46	10.62	4.53	10.20	4.59	10.86	4.66	11.22	4.69	11.59	4.72	12.40	4.78	13.29	4.84

12. Capacity Table

12-6. AJ125TXJ5KH/EA

COOLING

Combination (Capacity Index)					Combination (Total)	Combination (%)	Outdoor Temperature (°C,DB)	Indoor Temperature (°F, WB)													
								14		16		18		19		20		22		24	
								TC(kW)	PI(kW)	TC(kW)	PI(kW)	TC(kW)	PI(kW)	TC(kW)	PI(kW)	TC(kW)	PI(kW)	TC(kW)	PI(kW)	TC(kW)	PI(kW)
2000	2000	2500	2500	3500	12500	89%	10	11.05	2.78	15.58	2.85	15.88	2.91	16.06	2.95	16.25	2.98	16.71	3.04	17.24	3.10
							12	11.05	2.84	15.16	2.91	15.48	2.98	15.66	3.02	15.87	3.05	16.35	3.11	16.90	3.17
							14	11.05	2.92	14.75	2.99	15.09	3.05	15.29	3.09	15.51	3.12	16.01	3.18	16.58	3.24
							16	11.05	2.99	14.36	3.06	14.72	3.13	14.93	3.16	15.16	3.19	15.68	3.25	16.28	3.31
							18	11.05	3.07	13.99	3.14	14.37	3.20	14.59	3.23	14.83	3.27	15.37	3.33	15.99	3.39
							20	11.05	3.14	13.64	3.21	14.04	3.28	14.27	3.31	14.52	3.34	15.08	3.41	15.73	3.47
							21	11.05	3.18	13.47	3.25	13.88	3.32	14.12	3.35	14.37	3.38	14.95	3.45	15.60	3.50
							23	11.05	3.27	13.14	3.33	13.57	3.40	13.82	3.43	14.09	3.46	14.68	3.53	15.36	3.58
							25	11.05	3.35	12.83	3.42	13.28	3.48	13.54	3.51	13.82	3.55	14.44	3.61	15.13	3.67
							27	11.05	3.43	12.53	3.50	13.01	3.57	13.28	3.60	13.57	3.63	14.21	3.69	14.92	3.75
							29	11.05	3.52	12.26	3.59	12.76	3.65	13.04	3.69	13.34	3.72	14.00	3.78	14.73	3.84
							31	11.05	3.61	12.00	3.68	12.52	3.74	12.81	3.78	13.12	3.81	13.80	3.87	14.56	3.92
							33	11.05	3.70	11.76	3.77	12.30	3.83	12.60	3.87	12.92	3.90	13.62	3.96	14.41	4.02
							35	11.05	3.80	11.53	3.86	12.10	3.93	12.50	3.95	12.74	3.99	13.46	4.05	14.27	4.11
							37	11.05	3.89	11.32	3.96	11.91	4.02	12.23	4.05	12.58	4.09	13.32	4.15	14.15	4.20
							39	11.05	3.99	11.14	4.06	11.74	4.12	12.08	4.15	12.43	4.18	13.20	4.24	14.05	4.30
							42	11.05	4.14	10.88	4.21	11.52	4.27	11.87	4.30	12.24	4.33	13.04	4.39	13.92	4.45
							44	11.05	4.24	10.74	4.31	11.40	4.37	11.76	4.40	12.14	4.43	12.96	4.49	13.86	4.55
							46	11.05	4.35	10.61	4.42	11.29	4.48	11.66	4.51	12.06	4.54	12.90	4.60	13.82	4.65
2000	2000	2500	2500	5000	14000	100%	10	14.05	2.77	14.61	2.83	15.17	2.89	15.45	2.92	15.74	2.95	16.31	3.01	16.90	3.07
							12	13.81	2.85	14.36	2.91	14.93	2.96	15.21	2.99	15.50	3.02	16.07	3.08	16.66	3.14
							14	13.57	2.92	14.12	2.98	14.68	3.04	14.97	3.07	15.25	3.10	15.83	3.16	16.42	3.22
							16	13.32	3.00	13.88	3.06	14.44	3.12	14.73	3.15	15.02	3.18	15.60	3.24	16.18	3.30
							18	13.08	3.08	13.64	3.14	14.20	3.20	14.49	3.23	14.78	3.26	15.36	3.32	15.95	3.38
							20	12.84	3.16	13.40	3.22	13.96	3.28	14.25	3.31	14.54	3.34	15.12	3.40	15.71	3.46
							21	12.72	3.20	13.28	3.26	13.84	3.32	14.13	3.35	14.42	3.38	15.00	3.44	15.59	3.50
							23	12.48	3.28	13.04	3.34	13.61	3.40	13.89	3.43	14.18	3.46	14.77	3.53	15.36	3.59
							25	12.24	3.36	12.80	3.42	13.37	3.49	13.66	3.52	13.94	3.55	14.53	3.61	15.12	3.67
							27	12.00	3.45	12.56	3.51	13.13	3.57	13.42	3.60	13.71	3.63	14.29	3.70	14.89	3.76
							29	11.76	3.53	12.32	3.60	12.89	3.66	13.18	3.69	13.47	3.72	14.06	3.78	14.66	3.85
							31	11.52	3.62	12.09	3.68	12.66	3.75	12.95	3.78	13.24	3.81	13.83	3.87	14.42	3.94
							33	11.29	3.71	11.85	3.77	12.42	3.84	12.71	3.87	13.00	3.90	13.59	3.96	14.19	4.03
							35	11.05	3.80	11.61	3.86	12.19	3.93	12.50	3.95	12.77	3.99	13.36	4.05	13.96	4.12
							37	10.81	3.89	11.38	3.95	11.95	4.02	12.24	4.05	12.54	4.08	13.13	4.15	13.73	4.21
							39	10.58	3.98	11.14	4.05	11.72	4.11	12.01	4.14	12.30	4.18	12.90	4.24	13.50	4.31
							42	10.22	4.12	10.79	4.19	11.37	4.26	11.66	4.29	11.96	4.32	12.55	4.39	13.15	4.45
							44	9.99	4.22	10.56	4.29	11.14	4.35	11.43	4.39	11.72	4.42	12.32	4.48	12.92	4.55
							46	9.76	4.32	10.33	4.38	10.91	4.45	11.20	4.48	11.49	4.52	12.09	4.58	12.69	4.65

12. Capacity Table

12-6. AJ125TXJ5KH/EA

COOLING

Combination (Capacity Index)					Combination (Total)	Combination (%)	Outdoor Temperature (°C,DB)	Indoor Temperature (°F, WB)													
								14		16		18		19		20		22		24	
								TC(kW)	PI(kW)	TC(kW)	PI(kW)	TC(kW)	PI(kW)	TC(kW)	PI(kW)	TC(kW)	PI(kW)	TC(kW)	PI(kW)	TC(kW)	PI(kW)
2000	2000	2500	2500	6800	15800	113%	10	14.05	2.77	14.61	2.83	15.17	2.89	15.45	2.92	15.74	2.95	16.31	3.01	16.90	3.07
							12	13.81	2.85	14.36	2.91	14.93	2.96	15.21	2.99	15.50	3.02	16.07	3.08	16.66	3.14
							14	13.57	2.92	14.12	2.98	14.68	3.04	14.97	3.07	15.25	3.10	15.83	3.16	16.42	3.22
							16	13.32	3.00	13.88	3.06	14.44	3.12	14.73	3.15	15.02	3.18	15.60	3.24	16.18	3.30
							18	13.08	3.08	13.64	3.14	14.20	3.20	14.49	3.23	14.78	3.26	15.36	3.32	15.95	3.38
							20	12.84	3.16	13.40	3.22	13.96	3.28	14.25	3.31	14.54	3.34	15.12	3.40	15.71	3.46
							21	12.72	3.20	13.28	3.26	13.84	3.32	14.13	3.35	14.42	3.38	15.00	3.44	15.59	3.50
							23	12.48	3.28	13.04	3.34	13.61	3.40	13.89	3.43	14.18	3.46	14.77	3.53	15.36	3.59
							25	12.24	3.36	12.80	3.42	13.37	3.49	13.66	3.52	13.94	3.55	14.53	3.61	15.12	3.67
							27	12.00	3.45	12.56	3.51	13.13	3.57	13.42	3.60	13.71	3.63	14.29	3.70	14.89	3.76
							29	11.76	3.53	12.32	3.60	12.89	3.66	13.18	3.69	13.47	3.72	14.06	3.78	14.66	3.85
							31	11.52	3.62	12.09	3.68	12.66	3.75	12.95	3.78	13.24	3.81	13.83	3.87	14.42	3.94
							33	11.29	3.71	11.85	3.77	12.42	3.84	12.71	3.87	13.00	3.90	13.59	3.96	14.19	4.03
							35	11.05	3.80	11.61	3.86	12.19	3.93	12.50	3.95	12.77	3.99	13.36	4.05	13.96	4.12
							37	10.81	3.89	11.38	3.95	11.95	4.02	12.24	4.05	12.54	4.08	13.13	4.15	13.73	4.21
							39	10.58	3.98	11.14	4.05	11.72	4.11	12.01	4.14	12.30	4.18	12.90	4.24	13.50	4.31
							42	10.22	4.12	10.79	4.19	11.37	4.26	11.66	4.29	11.96	4.32	12.55	4.39	13.15	4.45
							44	9.99	4.22	10.56	4.29	11.14	4.35	11.43	4.39	11.72	4.42	12.32	4.48	12.92	4.55
							46	9.76	4.32	10.33	4.38	10.91	4.45	11.20	4.48	11.49	4.52	12.09	4.58	12.69	4.65
2000	2000	2500	3500	3500	13500	96%	10	11.05	2.78	15.58	2.85	15.88	2.91	16.06	2.95	16.25	2.98	16.71	3.04	17.24	3.10
							12	11.05	2.84	15.16	2.91	15.48	2.98	15.66	3.02	15.87	3.05	16.35	3.11	16.90	3.17
							14	11.05	2.92	14.75	2.99	15.09	3.05	15.29	3.09	15.51	3.12	16.01	3.18	16.58	3.24
							16	11.05	2.99	14.36	3.06	14.72	3.13	14.93	3.16	15.16	3.19	15.68	3.25	16.28	3.31
							18	11.05	3.07	13.99	3.14	14.37	3.20	14.59	3.23	14.83	3.27	15.37	3.33	15.99	3.39
							20	11.05	3.14	13.64	3.21	14.04	3.28	14.27	3.31	14.52	3.34	15.08	3.41	15.73	3.47
							21	11.05	3.18	13.47	3.25	13.88	3.32	14.12	3.35	14.37	3.38	14.95	3.45	15.60	3.50
							23	11.05	3.27	13.14	3.33	13.57	3.40	13.82	3.43	14.09	3.46	14.68	3.53	15.36	3.58
							25	11.05	3.35	12.83	3.42	13.28	3.48	13.54	3.51	13.82	3.55	14.44	3.61	15.13	3.67
							27	11.05	3.43	12.53	3.50	13.01	3.57	13.28	3.60	13.57	3.63	14.21	3.69	14.92	3.75
							29	11.05	3.52	12.26	3.59	12.76	3.65	13.04	3.69	13.34	3.72	14.00	3.78	14.73	3.84
							31	11.05	3.61	12.00	3.68	12.52	3.74	12.81	3.78	13.12	3.81	13.80	3.87	14.56	3.92
							33	11.05	3.70	11.76	3.77	12.30	3.83	12.60	3.87	12.92	3.90	13.62	3.96	14.41	4.02
							35	11.05	3.80	11.53	3.86	12.10	3.93	12.50	3.95	12.74	3.99	13.46	4.05	14.27	4.11
							37	11.05	3.89	11.32	3.96	11.91	4.02	12.23	4.05	12.58	4.09	13.32	4.15	14.15	4.20
							39	11.05	3.99	11.14	4.06	11.74	4.12	12.08	4.15	12.43	4.18	13.20	4.24	14.05	4.30
							42	11.05	4.14	10.88	4.21	11.52	4.27	11.87	4.30	12.24	4.33	13.04	4.39	13.92	4.45
							44	11.05	4.24	10.74	4.31	11.40	4.37	11.76	4.40	12.14	4.43	12.96	4.49	13.86	4.55
							46	11.05	4.35	10.61	4.42	11.29	4.48	11.66	4.51	12.06	4.54	12.90	4.60	13.82	4.65

12. Capacity Table

12-6. AJ125TXJ5KH/EA

COOLING

Combination (Capacity Index)					Combination (Total)	Combination (%)	Outdoor Temperature (°C,DB)	Indoor Temperature (°F, WB)													
								14		16		18		19		20		22		24	
								TC(kW)	PI(kW)	TC(kW)	PI(kW)	TC(kW)	PI(kW)	TC(kW)	PI(kW)	TC(kW)	PI(kW)	TC(kW)	PI(kW)	TC(kW)	PI(kW)
2000	2000	2500	3500	5000	15000	107%	10	14.05	2.77	14.61	2.83	15.17	2.89	15.45	2.92	15.74	2.95	16.31	3.01	16.90	3.07
							12	13.81	2.85	14.36	2.91	14.93	2.96	15.21	2.99	15.50	3.02	16.07	3.08	16.66	3.14
							14	13.57	2.92	14.12	2.98	14.68	3.04	14.97	3.07	15.25	3.10	15.83	3.16	16.42	3.22
							16	13.32	3.00	13.88	3.06	14.44	3.12	14.73	3.15	15.02	3.18	15.60	3.24	16.18	3.30
							18	13.08	3.08	13.64	3.14	14.20	3.20	14.49	3.23	14.78	3.26	15.36	3.32	15.95	3.38
							20	12.84	3.16	13.40	3.22	13.96	3.28	14.25	3.31	14.54	3.34	15.12	3.40	15.71	3.46
							21	12.72	3.20	13.28	3.26	13.84	3.32	14.13	3.35	14.42	3.38	15.00	3.44	15.59	3.50
							23	12.48	3.28	13.04	3.34	13.61	3.40	13.89	3.43	14.18	3.46	14.77	3.53	15.36	3.59
							25	12.24	3.36	12.80	3.42	13.37	3.49	13.66	3.52	13.94	3.55	14.53	3.61	15.12	3.67
							27	12.00	3.45	12.56	3.51	13.13	3.57	13.42	3.60	13.71	3.63	14.29	3.70	14.89	3.76
							29	11.76	3.53	12.32	3.60	12.89	3.66	13.18	3.69	13.47	3.72	14.06	3.78	14.66	3.85
							31	11.52	3.62	12.09	3.68	12.66	3.75	12.95	3.78	13.24	3.81	13.83	3.87	14.42	3.94
							33	11.29	3.71	11.85	3.77	12.42	3.84	12.71	3.87	13.00	3.90	13.59	3.96	14.19	4.03
							35	11.05	3.80	11.61	3.86	12.19	3.93	12.50	3.95	12.77	3.99	13.36	4.05	13.96	4.12
							37	10.81	3.89	11.38	3.95	11.95	4.02	12.24	4.05	12.54	4.08	13.13	4.15	13.73	4.21
							39	10.58	3.98	11.14	4.05	11.72	4.11	12.01	4.14	12.30	4.18	12.90	4.24	13.50	4.31
							42	10.22	4.12	10.79	4.19	11.37	4.26	11.66	4.29	11.96	4.32	12.55	4.39	13.15	4.45
							44	9.99	4.22	10.56	4.29	11.14	4.35	11.43	4.39	11.72	4.42	12.32	4.48	12.92	4.55
							46	9.76	4.32	10.33	4.38	10.91	4.45	11.20	4.48	11.49	4.52	12.09	4.58	12.69	4.65
2000	2000	2500	3500	6800	16800	120%	10	14.05	2.77	14.61	2.83	15.17	2.89	15.45	2.92	15.74	2.95	16.31	3.01	16.90	3.07
							12	13.81	2.85	14.36	2.91	14.93	2.96	15.21	2.99	15.50	3.02	16.07	3.08	16.66	3.14
							14	13.57	2.92	14.12	2.98	14.68	3.04	14.97	3.07	15.25	3.10	15.83	3.16	16.42	3.22
							16	13.32	3.00	13.88	3.06	14.44	3.12	14.73	3.15	15.02	3.18	15.60	3.24	16.18	3.30
							18	13.08	3.08	13.64	3.14	14.20	3.20	14.49	3.23	14.78	3.26	15.36	3.32	15.95	3.38
							20	12.84	3.16	13.40	3.22	13.96	3.28	14.25	3.31	14.54	3.34	15.12	3.40	15.71	3.46
							21	12.72	3.20	13.28	3.26	13.84	3.32	14.13	3.35	14.42	3.38	15.00	3.44	15.59	3.50
							23	12.48	3.28	13.04	3.34	13.61	3.40	13.89	3.43	14.18	3.46	14.77	3.53	15.36	3.59
							25	12.24	3.36	12.80	3.42	13.37	3.49	13.66	3.52	13.94	3.55	14.53	3.61	15.12	3.67
							27	12.00	3.45	12.56	3.51	13.13	3.57	13.42	3.60	13.71	3.63	14.29	3.70	14.89	3.76
							29	11.76	3.53	12.32	3.60	12.89	3.66	13.18	3.69	13.47	3.72	14.06	3.78	14.66	3.85
							31	11.52	3.62	12.09	3.68	12.66	3.75	12.95	3.78	13.24	3.81	13.83	3.87	14.42	3.94
							33	11.29	3.71	11.85	3.77	12.42	3.84	12.71	3.87	13.00	3.90	13.59	3.96	14.19	4.03
							35	11.05	3.80	11.61	3.86	12.19	3.93	12.50	3.95	12.77	3.99	13.36	4.05	13.96	4.12
							37	10.81	3.89	11.38	3.95	11.95	4.02	12.24	4.05	12.54	4.08	13.13	4.15	13.73	4.21
							39	10.58	3.98	11.14	4.05	11.72	4.11	12.01	4.14	12.30	4.18	12.90	4.24	13.50	4.31
							42	10.22	4.12	10.79	4.19	11.37	4.26	11.66	4.29	11.96	4.32	12.55	4.39	13.15	4.45
							44	9.99	4.22	10.56	4.29	11.14	4.35	11.43	4.39	11.72	4.42	12.32	4.48	12.92	4.55
							46	9.76	4.32	10.33	4.38	10.91	4.45	11.20	4.48	11.49	4.52	12.09	4.58	12.69	4.65

12. Capacity Table

12-6. AJ125TXJ5KH/EA

COOLING

Combination (Capacity Index)					Combination (Total)	Combination (%)	Outdoor Temperature (°C,DB)	Indoor Temperature (°F, WB)													
								14		16		18		19		20		22		24	
								TC(kW)	PI(kW)	TC(kW)	PI(kW)	TC(kW)	PI(kW)	TC(kW)	PI(kW)	TC(kW)	PI(kW)	TC(kW)	PI(kW)	TC(kW)	PI(kW)
2000	2000	2500	5000	5000	16500	118%	10	14.05	2.77	14.61	2.83	15.17	2.89	15.45	2.92	15.74	2.95	16.31	3.01	16.90	3.07
							12	13.81	2.85	14.36	2.91	14.93	2.96	15.21	2.99	15.50	3.02	16.07	3.08	16.66	3.14
							14	13.57	2.92	14.12	2.98	14.68	3.04	14.97	3.07	15.25	3.10	15.83	3.16	16.42	3.22
							16	13.32	3.00	13.88	3.06	14.44	3.12	14.73	3.15	15.02	3.18	15.60	3.24	16.18	3.30
							18	13.08	3.08	13.64	3.14	14.20	3.20	14.49	3.23	14.78	3.26	15.36	3.32	15.95	3.38
							20	12.84	3.16	13.40	3.22	13.96	3.28	14.25	3.31	14.54	3.34	15.12	3.40	15.71	3.46
							21	12.72	3.20	13.28	3.26	13.84	3.32	14.13	3.35	14.42	3.38	15.00	3.44	15.59	3.50
							23	12.48	3.28	13.04	3.34	13.61	3.40	13.89	3.43	14.18	3.46	14.77	3.53	15.36	3.59
							25	12.24	3.36	12.80	3.42	13.37	3.49	13.66	3.52	13.94	3.55	14.53	3.61	15.12	3.67
							27	12.00	3.45	12.56	3.51	13.13	3.57	13.42	3.60	13.71	3.63	14.29	3.70	14.89	3.76
							29	11.76	3.53	12.32	3.60	12.89	3.66	13.18	3.69	13.47	3.72	14.06	3.78	14.66	3.85
							31	11.52	3.62	12.09	3.68	12.66	3.75	12.95	3.78	13.24	3.81	13.83	3.87	14.42	3.94
							33	11.29	3.71	11.85	3.77	12.42	3.84	12.71	3.87	13.00	3.90	13.59	3.96	14.19	4.03
							35	11.05	3.80	11.61	3.86	12.19	3.93	12.50	3.95	12.77	3.99	13.36	4.05	13.96	4.12
							37	10.81	3.89	11.38	3.95	11.95	4.02	12.24	4.05	12.54	4.08	13.13	4.15	13.73	4.21
							39	10.58	3.98	11.14	4.05	11.72	4.11	12.01	4.14	12.30	4.18	12.90	4.24	13.50	4.31
							42	10.22	4.12	10.79	4.19	11.37	4.26	11.66	4.29	11.96	4.32	12.55	4.39	13.15	4.45
							44	9.99	4.22	10.56	4.29	11.14	4.35	11.43	4.39	11.72	4.42	12.32	4.48	12.92	4.55
							46	9.76	4.32	10.33	4.38	10.91	4.45	11.20	4.48	11.49	4.52	12.09	4.58	12.69	4.65
2000	2000	3500	3500	3500	14500	104%	10	14.05	2.77	14.61	2.83	15.17	2.89	15.45	2.92	15.74	2.95	16.31	3.01	16.90	3.07
							12	13.81	2.85	14.36	2.91	14.93	2.96	15.21	2.99	15.50	3.02	16.07	3.08	16.66	3.14
							14	13.57	2.92	14.12	2.98	14.68	3.04	14.97	3.07	15.25	3.10	15.83	3.16	16.42	3.22
							16	13.32	3.00	13.88	3.06	14.44	3.12	14.73	3.15	15.02	3.18	15.60	3.24	16.18	3.30
							18	13.08	3.08	13.64	3.14	14.20	3.20	14.49	3.23	14.78	3.26	15.36	3.32	15.95	3.38
							20	12.84	3.16	13.40	3.22	13.96	3.28	14.25	3.31	14.54	3.34	15.12	3.40	15.71	3.46
							21	12.72	3.20	13.28	3.26	13.84	3.32	14.13	3.35	14.42	3.38	15.00	3.44	15.59	3.50
							23	12.48	3.28	13.04	3.34	13.61	3.40	13.89	3.43	14.18	3.46	14.77	3.53	15.36	3.59
							25	12.24	3.36	12.80	3.42	13.37	3.49	13.66	3.52	13.94	3.55	14.53	3.61	15.12	3.67
							27	12.00	3.45	12.56	3.51	13.13	3.57	13.42	3.60	13.71	3.63	14.29	3.70	14.89	3.76
							29	11.76	3.53	12.32	3.60	12.89	3.66	13.18	3.69	13.47	3.72	14.06	3.78	14.66	3.85
							31	11.52	3.62	12.09	3.68	12.66	3.75	12.95	3.78	13.24	3.81	13.83	3.87	14.42	3.94
							33	11.29	3.71	11.85	3.77	12.42	3.84	12.71	3.87	13.00	3.90	13.59	3.96	14.19	4.03
							35	11.05	3.80	11.61	3.86	12.19	3.93	12.50	3.95	12.77	3.99	13.36	4.05	13.96	4.12
							37	10.81	3.89	11.38	3.95	11.95	4.02	12.24	4.05	12.54	4.08	13.13	4.15	13.73	4.21
							39	10.58	3.98	11.14	4.05	11.72	4.11	12.01	4.14	12.30	4.18	12.90	4.24	13.50	4.31
							42	10.22	4.12	10.79	4.19	11.37	4.26	11.66	4.29	11.96	4.32	12.55	4.39	13.15	4.45
							44	9.99	4.22	10.56	4.29	11.14	4.35	11.43	4.39	11.72	4.42	12.32	4.48	12.92	4.55
							46	9.76	4.32	10.33	4.38	10.91	4.45	11.20	4.48	11.49	4.52	12.09	4.58	12.69	4.65

12. Capacity Table

12-6. AJ125TXJ5KH/EA

COOLING

Combination (Capacity Index)					Combination (Total)	Combination (%)	Outdoor Temperature (°C,DB)	Indoor Temperature (°F, WB)													
								14		16		18		19		20		22		24	
								TC(kW)	PI(kW)	TC(kW)	PI(kW)	TC(kW)	PI(kW)	TC(kW)	PI(kW)	TC(kW)	PI(kW)	TC(kW)	PI(kW)	TC(kW)	PI(kW)
2000	2000	3500	3500	5000	16000	114%	10	14.05	2.77	14.61	2.83	15.17	2.89	15.45	2.92	15.74	2.95	16.31	3.01	16.90	3.07
							12	13.81	2.85	14.36	2.91	14.93	2.96	15.21	2.99	15.50	3.02	16.07	3.08	16.66	3.14
							14	13.57	2.92	14.12	2.98	14.68	3.04	14.97	3.07	15.25	3.10	15.83	3.16	16.42	3.22
							16	13.32	3.00	13.88	3.06	14.44	3.12	14.73	3.15	15.02	3.18	15.60	3.24	16.18	3.30
							18	13.08	3.08	13.64	3.14	14.20	3.20	14.49	3.23	14.78	3.26	15.36	3.32	15.95	3.38
							20	12.84	3.16	13.40	3.22	13.96	3.28	14.25	3.31	14.54	3.34	15.12	3.40	15.71	3.46
							21	12.72	3.20	13.28	3.26	13.84	3.32	14.13	3.35	14.42	3.38	15.00	3.44	15.59	3.50
							23	12.48	3.28	13.04	3.34	13.61	3.40	13.89	3.43	14.18	3.46	14.77	3.53	15.36	3.59
							25	12.24	3.36	12.80	3.42	13.37	3.49	13.66	3.52	13.94	3.55	14.53	3.61	15.12	3.67
							27	12.00	3.45	12.56	3.51	13.13	3.57	13.42	3.60	13.71	3.63	14.29	3.70	14.89	3.76
							29	11.76	3.53	12.32	3.60	12.89	3.66	13.18	3.69	13.47	3.72	14.06	3.78	14.66	3.85
							31	11.52	3.62	12.09	3.68	12.66	3.75	12.95	3.78	13.24	3.81	13.83	3.87	14.42	3.94
							33	11.29	3.71	11.85	3.77	12.42	3.84	12.71	3.87	13.00	3.90	13.59	3.96	14.19	4.03
							35	11.05	3.80	11.61	3.86	12.19	3.93	12.50	3.95	12.77	3.99	13.36	4.05	13.96	4.12
							37	10.81	3.89	11.38	3.95	11.95	4.02	12.24	4.05	12.54	4.08	13.13	4.15	13.73	4.21
							39	10.58	3.98	11.14	4.05	11.72	4.11	12.01	4.14	12.30	4.18	12.90	4.24	13.50	4.31
							42	10.22	4.12	10.79	4.19	11.37	4.26	11.66	4.29	11.96	4.32	12.55	4.39	13.15	4.45
							44	9.99	4.22	10.56	4.29	11.14	4.35	11.43	4.39	11.72	4.42	12.32	4.48	12.92	4.55
							46	9.76	4.32	10.33	4.38	10.91	4.45	11.20	4.48	11.49	4.52	12.09	4.58	12.69	4.65
2000	2000	3500	5000	5000	17500	125%	10	14.05	2.77	14.61	2.83	15.17	2.89	15.45	2.92	15.74	2.95	16.31	3.01	16.90	3.07
							12	13.81	2.85	14.36	2.91	14.93	2.96	15.21	2.99	15.50	3.02	16.07	3.08	16.66	3.14
							14	13.57	2.92	14.12	2.98	14.68	3.04	14.97	3.07	15.25	3.10	15.83	3.16	16.42	3.22
							16	13.32	3.00	13.88	3.06	14.44	3.12	14.73	3.15	15.02	3.18	15.60	3.24	16.18	3.30
							18	13.08	3.08	13.64	3.14	14.20	3.20	14.49	3.23	14.78	3.26	15.36	3.32	15.95	3.38
							20	12.84	3.16	13.40	3.22	13.96	3.28	14.25	3.31	14.54	3.34	15.12	3.40	15.71	3.46
							21	12.72	3.20	13.28	3.26	13.84	3.32	14.13	3.35	14.42	3.38	15.00	3.44	15.59	3.50
							23	12.48	3.28	13.04	3.34	13.61	3.40	13.89	3.43	14.18	3.46	14.77	3.53	15.36	3.59
							25	12.24	3.36	12.80	3.42	13.37	3.49	13.66	3.52	13.94	3.55	14.53	3.61	15.12	3.67
							27	12.00	3.45	12.56	3.51	13.13	3.57	13.42	3.60	13.71	3.63	14.29	3.70	14.89	3.76
							29	11.76	3.53	12.32	3.60	12.89	3.66	13.18	3.69	13.47	3.72	14.06	3.78	14.66	3.85
							31	11.52	3.62	12.09	3.68	12.66	3.75	12.95	3.78	13.24	3.81	13.83	3.87	14.42	3.94
							33	11.29	3.71	11.85	3.77	12.42	3.84	12.71	3.87	13.00	3.90	13.59	3.96	14.19	4.03
							35	11.05	3.80	11.61	3.86	12.19	3.93	12.50	3.95	12.77	3.99	13.36	4.05	13.96	4.12
							37	10.81	3.89	11.38	3.95	11.95	4.02	12.24	4.05	12.54	4.08	13.13	4.15	13.73	4.21
							39	10.58	3.98	11.14	4.05	11.72	4.11	12.01	4.14	12.30	4.18	12.90	4.24	13.50	4.31
							42	10.22	4.12	10.79	4.19	11.37	4.26	11.66	4.29	11.96	4.32	12.55	4.39	13.15	4.45
							44	9.99	4.22	10.56	4.29	11.14	4.35	11.43	4.39	11.72	4.42	12.32	4.48	12.92	4.55
							46	9.76	4.32	10.33	4.38	10.91	4.45	11.20	4.48	11.49	4.52	12.09	4.58	12.69	4.65

12. Capacity Table

12-6. AJ125TXJ5KH/EA

COOLING

Combination (Capacity Index)					Combination (Total)	Combination (%)	Outdoor Temperature (°C,DB)	Indoor Temperature (°F, WB)													
								14		16		18		19		20		22		24	
								TC(kW)	PI(kW)	TC(kW)	PI(kW)	TC(kW)	PI(kW)	TC(kW)	PI(kW)	TC(kW)	PI(kW)	TC(kW)	PI(kW)	TC(kW)	PI(kW)
2000	2500	2500	2500	2500	12000	86%	10	11.05	2.78	15.58	2.85	15.88	2.91	16.06	2.95	16.25	2.98	16.71	3.04	17.24	3.10
							12	11.05	2.84	15.16	2.91	15.48	2.98	15.66	3.02	15.87	3.05	16.35	3.11	16.90	3.17
							14	11.05	2.92	14.75	2.99	15.09	3.05	15.29	3.09	15.51	3.12	16.01	3.18	16.58	3.24
							16	11.05	2.99	14.36	3.06	14.72	3.13	14.93	3.16	15.16	3.19	15.68	3.25	16.28	3.31
							18	11.05	3.07	13.99	3.14	14.37	3.20	14.59	3.23	14.83	3.27	15.37	3.33	15.99	3.39
							20	11.05	3.14	13.64	3.21	14.04	3.28	14.27	3.31	14.52	3.34	15.08	3.41	15.73	3.47
							21	11.05	3.18	13.47	3.25	13.88	3.32	14.12	3.35	14.37	3.38	14.95	3.45	15.60	3.50
							23	11.05	3.27	13.14	3.33	13.57	3.40	13.82	3.43	14.09	3.46	14.68	3.53	15.36	3.58
							25	11.05	3.35	12.83	3.42	13.28	3.48	13.54	3.51	13.82	3.55	14.44	3.61	15.13	3.67
							27	11.05	3.43	12.53	3.50	13.01	3.57	13.28	3.60	13.57	3.63	14.21	3.69	14.92	3.75
							29	11.05	3.52	12.26	3.59	12.76	3.65	13.04	3.69	13.34	3.72	14.00	3.78	14.73	3.84
							31	11.05	3.61	12.00	3.68	12.52	3.74	12.81	3.78	13.12	3.81	13.80	3.87	14.56	3.92
							33	11.05	3.70	11.76	3.77	12.30	3.83	12.60	3.87	12.92	3.90	13.62	3.96	14.41	4.02
							35	11.05	3.80	11.53	3.86	12.10	3.93	12.50	3.95	12.74	3.99	13.46	4.05	14.27	4.11
							37	11.05	3.89	11.32	3.96	11.91	4.02	12.23	4.05	12.58	4.09	13.32	4.15	14.15	4.20
							39	11.05	3.99	11.14	4.06	11.74	4.12	12.08	4.15	12.43	4.18	13.20	4.24	14.05	4.30
							42	11.05	4.14	10.88	4.21	11.52	4.27	11.87	4.30	12.24	4.33	13.04	4.39	13.92	4.45
							44	11.05	4.24	10.74	4.31	11.40	4.37	11.76	4.40	12.14	4.43	12.96	4.49	13.86	4.55
							46	11.05	4.35	10.61	4.42	11.29	4.48	11.66	4.51	12.06	4.54	12.90	4.60	13.82	4.65
2000	2500	2500	2500	3500	13000	93%	10	11.05	2.78	15.58	2.85	15.88	2.91	16.06	2.95	16.25	2.98	16.71	3.04	17.24	3.10
							12	11.05	2.84	15.16	2.91	15.48	2.98	15.66	3.02	15.87	3.05	16.35	3.11	16.90	3.17
							14	11.05	2.92	14.75	2.99	15.09	3.05	15.29	3.09	15.51	3.12	16.01	3.18	16.58	3.24
							16	11.05	2.99	14.36	3.06	14.72	3.13	14.93	3.16	15.16	3.19	15.68	3.25	16.28	3.31
							18	11.05	3.07	13.99	3.14	14.37	3.20	14.59	3.23	14.83	3.27	15.37	3.33	15.99	3.39
							20	11.05	3.14	13.64	3.21	14.04	3.28	14.27	3.31	14.52	3.34	15.08	3.41	15.73	3.47
							21	11.05	3.18	13.47	3.25	13.88	3.32	14.12	3.35	14.37	3.38	14.95	3.45	15.60	3.50
							23	11.05	3.27	13.14	3.33	13.57	3.40	13.82	3.43	14.09	3.46	14.68	3.53	15.36	3.58
							25	11.05	3.35	12.83	3.42	13.28	3.48	13.54	3.51	13.82	3.55	14.44	3.61	15.13	3.67
							27	11.05	3.43	12.53	3.50	13.01	3.57	13.28	3.60	13.57	3.63	14.21	3.69	14.92	3.75
							29	11.05	3.52	12.26	3.59	12.76	3.65	13.04	3.69	13.34	3.72	14.00	3.78	14.73	3.84
							31	11.05	3.61	12.00	3.68	12.52	3.74	12.81	3.78	13.12	3.81	13.80	3.87	14.56	3.92
							33	11.05	3.70	11.76	3.77	12.30	3.83	12.60	3.87	12.92	3.90	13.62	3.96	14.41	4.02
							35	11.05	3.80	11.53	3.86	12.10	3.93	12.50	3.95	12.74	3.99	13.46	4.05	14.27	4.11
							37	11.05	3.89	11.32	3.96	11.91	4.02	12.23	4.05	12.58	4.09	13.32	4.15	14.15	4.20
							39	11.05	3.99	11.14	4.06	11.74	4.12	12.08	4.15	12.43	4.18	13.20	4.24	14.05	4.30
							42	11.05	4.14	10.88	4.21	11.52	4.27	11.87	4.30	12.24	4.33	13.04	4.39	13.92	4.45
							44	11.05	4.24	10.74	4.31	11.40	4.37	11.76	4.40	12.14	4.43	12.96	4.49	13.86	4.55
							46	11.05	4.35	10.61	4.42	11.29	4.48	11.66	4.51	12.06	4.54	12.90	4.60	13.82	4.65

12. Capacity Table

12-6. AJ125TXJ5KH/EA

COOLING

Combination (Capacity Index)					Combination (Total)	Combination (%)	Outdoor Temperature (°C,DB)	Indoor Temperature (°F, WB)													
								14		16		18		19		20		22		24	
								TC(kW)	PI(kW)	TC(kW)	PI(kW)	TC(kW)	PI(kW)	TC(kW)	PI(kW)	TC(kW)	PI(kW)	TC(kW)	PI(kW)	TC(kW)	PI(kW)
2000	2500	2500	2500	5000	14500	104%	10	14.05	2.77	14.61	2.83	15.17	2.89	15.45	2.92	15.74	2.95	16.31	3.01	16.90	3.07
							12	13.81	2.85	14.36	2.91	14.93	2.96	15.21	2.99	15.50	3.02	16.07	3.08	16.66	3.14
							14	13.57	2.92	14.12	2.98	14.68	3.04	14.97	3.07	15.25	3.10	15.83	3.16	16.42	3.22
							16	13.32	3.00	13.88	3.06	14.44	3.12	14.73	3.15	15.02	3.18	15.60	3.24	16.18	3.30
							18	13.08	3.08	13.64	3.14	14.20	3.20	14.49	3.23	14.78	3.26	15.36	3.32	15.95	3.38
							20	12.84	3.16	13.40	3.22	13.96	3.28	14.25	3.31	14.54	3.34	15.12	3.40	15.71	3.46
							21	12.72	3.20	13.28	3.26	13.84	3.32	14.13	3.35	14.42	3.38	15.00	3.44	15.59	3.50
							23	12.48	3.28	13.04	3.34	13.61	3.40	13.89	3.43	14.18	3.46	14.77	3.53	15.36	3.59
							25	12.24	3.36	12.80	3.42	13.37	3.49	13.66	3.52	13.94	3.55	14.53	3.61	15.12	3.67
							27	12.00	3.45	12.56	3.51	13.13	3.57	13.42	3.60	13.71	3.63	14.29	3.70	14.89	3.76
							29	11.76	3.53	12.32	3.60	12.89	3.66	13.18	3.69	13.47	3.72	14.06	3.78	14.66	3.85
							31	11.52	3.62	12.09	3.68	12.66	3.75	12.95	3.78	13.24	3.81	13.83	3.87	14.42	3.94
							33	11.29	3.71	11.85	3.77	12.42	3.84	12.71	3.87	13.00	3.90	13.59	3.96	14.19	4.03
							35	11.05	3.80	11.61	3.86	12.19	3.93	12.50	3.95	12.77	3.99	13.36	4.05	13.96	4.12
							37	10.81	3.89	11.38	3.95	11.95	4.02	12.24	4.05	12.54	4.08	13.13	4.15	13.73	4.21
							39	10.58	3.98	11.14	4.05	11.72	4.11	12.01	4.14	12.30	4.18	12.90	4.24	13.50	4.31
							42	10.22	4.12	10.79	4.19	11.37	4.26	11.66	4.29	11.96	4.32	12.55	4.39	13.15	4.45
							44	9.99	4.22	10.56	4.29	11.14	4.35	11.43	4.39	11.72	4.42	12.32	4.48	12.92	4.55
							46	9.76	4.32	10.33	4.38	10.91	4.45	11.20	4.48	11.49	4.52	12.09	4.58	12.69	4.65
2000	2500	2500	2500	6800	16300	116%	10	14.05	2.77	14.61	2.83	15.17	2.89	15.45	2.92	15.74	2.95	16.31	3.01	16.90	3.07
							12	13.81	2.85	14.36	2.91	14.93	2.96	15.21	2.99	15.50	3.02	16.07	3.08	16.66	3.14
							14	13.57	2.92	14.12	2.98	14.68	3.04	14.97	3.07	15.25	3.10	15.83	3.16	16.42	3.22
							16	13.32	3.00	13.88	3.06	14.44	3.12	14.73	3.15	15.02	3.18	15.60	3.24	16.18	3.30
							18	13.08	3.08	13.64	3.14	14.20	3.20	14.49	3.23	14.78	3.26	15.36	3.32	15.95	3.38
							20	12.84	3.16	13.40	3.22	13.96	3.28	14.25	3.31	14.54	3.34	15.12	3.40	15.71	3.46
							21	12.72	3.20	13.28	3.26	13.84	3.32	14.13	3.35	14.42	3.38	15.00	3.44	15.59	3.50
							23	12.48	3.28	13.04	3.34	13.61	3.40	13.89	3.43	14.18	3.46	14.77	3.53	15.36	3.59
							25	12.24	3.36	12.80	3.42	13.37	3.49	13.66	3.52	13.94	3.55	14.53	3.61	15.12	3.67
							27	12.00	3.45	12.56	3.51	13.13	3.57	13.42	3.60	13.71	3.63	14.29	3.70	14.89	3.76
							29	11.76	3.53	12.32	3.60	12.89	3.66	13.18	3.69	13.47	3.72	14.06	3.78	14.66	3.85
							31	11.52	3.62	12.09	3.68	12.66	3.75	12.95	3.78	13.24	3.81	13.83	3.87	14.42	3.94
							33	11.29	3.71	11.85	3.77	12.42	3.84	12.71	3.87	13.00	3.90	13.59	3.96	14.19	4.03
							35	11.05	3.80	11.61	3.86	12.19	3.93	12.50	3.95	12.77	3.99	13.36	4.05	13.96	4.12
							37	10.81	3.89	11.38	3.95	11.95	4.02	12.24	4.05	12.54	4.08	13.13	4.15	13.73	4.21
							39	10.58	3.98	11.14	4.05	11.72	4.11	12.01	4.14	12.30	4.18	12.90	4.24	13.50	4.31
							42	10.22	4.12	10.79	4.19	11.37	4.26	11.66	4.29	11.96	4.32	12.55	4.39	13.15	4.45
							44	9.99	4.22	10.56	4.29	11.14	4.35	11.43	4.39	11.72	4.42	12.32	4.48	12.92	4.55
							46	9.76	4.32	10.33	4.38	10.91	4.45	11.20	4.48	11.49	4.52	12.09	4.58	12.69	4.65

12. Capacity Table

12-6. AJ125TXJ5KH/EA

COOLING

Combination (Capacity Index)					Combination (Total)	Combination (%)	Outdoor Temperature (°C,DB)	Indoor Temperature (°F, WB)													
								14		16		18		19		20		22		24	
								TC(kW)	PI(kW)	TC(kW)	PI(kW)	TC(kW)	PI(kW)	TC(kW)	PI(kW)	TC(kW)	PI(kW)	TC(kW)	PI(kW)	TC(kW)	PI(kW)
2000	2500	2500	3500	3500	14000	100%	10	14.05	2.77	14.61	2.83	15.17	2.89	15.45	2.92	15.74	2.95	16.31	3.01	16.90	3.07
							12	13.81	2.85	14.36	2.91	14.93	2.96	15.21	2.99	15.50	3.02	16.07	3.08	16.66	3.14
							14	13.57	2.92	14.12	2.98	14.68	3.04	14.97	3.07	15.25	3.10	15.83	3.16	16.42	3.22
							16	13.32	3.00	13.88	3.06	14.44	3.12	14.73	3.15	15.02	3.18	15.60	3.24	16.18	3.30
							18	13.08	3.08	13.64	3.14	14.20	3.20	14.49	3.23	14.78	3.26	15.36	3.32	15.95	3.38
							20	12.84	3.16	13.40	3.22	13.96	3.28	14.25	3.31	14.54	3.34	15.12	3.40	15.71	3.46
							21	12.72	3.20	13.28	3.26	13.84	3.32	14.13	3.35	14.42	3.38	15.00	3.44	15.59	3.50
							23	12.48	3.28	13.04	3.34	13.61	3.40	13.89	3.43	14.18	3.46	14.77	3.53	15.36	3.59
							25	12.24	3.36	12.80	3.42	13.37	3.49	13.66	3.52	13.94	3.55	14.53	3.61	15.12	3.67
							27	12.00	3.45	12.56	3.51	13.13	3.57	13.42	3.60	13.71	3.63	14.29	3.70	14.89	3.76
							29	11.76	3.53	12.32	3.60	12.89	3.66	13.18	3.69	13.47	3.72	14.06	3.78	14.66	3.85
							31	11.52	3.62	12.09	3.68	12.66	3.75	12.95	3.78	13.24	3.81	13.83	3.87	14.42	3.94
							33	11.29	3.71	11.85	3.77	12.42	3.84	12.71	3.87	13.00	3.90	13.59	3.96	14.19	4.03
							35	11.05	3.80	11.61	3.86	12.19	3.93	12.50	3.95	12.77	3.99	13.36	4.05	13.96	4.12
							37	10.81	3.89	11.38	3.95	11.95	4.02	12.24	4.05	12.54	4.08	13.13	4.15	13.73	4.21
							39	10.58	3.98	11.14	4.05	11.72	4.11	12.01	4.14	12.30	4.18	12.90	4.24	13.50	4.31
							42	10.22	4.12	10.79	4.19	11.37	4.26	11.66	4.29	11.96	4.32	12.55	4.39	13.15	4.45
							44	9.99	4.22	10.56	4.29	11.14	4.35	11.43	4.39	11.72	4.42	12.32	4.48	12.92	4.55
							46	9.76	4.32	10.33	4.38	10.91	4.45	11.20	4.48	11.49	4.52	12.09	4.58	12.69	4.65
2000	2500	2500	3500	5000	15500	111%	10	14.05	2.77	14.61	2.83	15.17	2.89	15.45	2.92	15.74	2.95	16.31	3.01	16.90	3.07
							12	13.81	2.85	14.36	2.91	14.93	2.96	15.21	2.99	15.50	3.02	16.07	3.08	16.66	3.14
							14	13.57	2.92	14.12	2.98	14.68	3.04	14.97	3.07	15.25	3.10	15.83	3.16	16.42	3.22
							16	13.32	3.00	13.88	3.06	14.44	3.12	14.73	3.15	15.02	3.18	15.60	3.24	16.18	3.30
							18	13.08	3.08	13.64	3.14	14.20	3.20	14.49	3.23	14.78	3.26	15.36	3.32	15.95	3.38
							20	12.84	3.16	13.40	3.22	13.96	3.28	14.25	3.31	14.54	3.34	15.12	3.40	15.71	3.46
							21	12.72	3.20	13.28	3.26	13.84	3.32	14.13	3.35	14.42	3.38	15.00	3.44	15.59	3.50
							23	12.48	3.28	13.04	3.34	13.61	3.40	13.89	3.43	14.18	3.46	14.77	3.53	15.36	3.59
							25	12.24	3.36	12.80	3.42	13.37	3.49	13.66	3.52	13.94	3.55	14.53	3.61	15.12	3.67
							27	12.00	3.45	12.56	3.51	13.13	3.57	13.42	3.60	13.71	3.63	14.29	3.70	14.89	3.76
							29	11.76	3.53	12.32	3.60	12.89	3.66	13.18	3.69	13.47	3.72	14.06	3.78	14.66	3.85
							31	11.52	3.62	12.09	3.68	12.66	3.75	12.95	3.78	13.24	3.81	13.83	3.87	14.42	3.94
							33	11.29	3.71	11.85	3.77	12.42	3.84	12.71	3.87	13.00	3.90	13.59	3.96	14.19	4.03
							35	11.05	3.80	11.61	3.86	12.19	3.93	12.50	3.95	12.77	3.99	13.36	4.05	13.96	4.12
							37	10.81	3.89	11.38	3.95	11.95	4.02	12.24	4.05	12.54	4.08	13.13	4.15	13.73	4.21
							39	10.58	3.98	11.14	4.05	11.72	4.11	12.01	4.14	12.30	4.18	12.90	4.24	13.50	4.31
							42	10.22	4.12	10.79	4.19	11.37	4.26	11.66	4.29	11.96	4.32	12.55	4.39	13.15	4.45
							44	9.99	4.22	10.56	4.29	11.14	4.35	11.43	4.39	11.72	4.42	12.32	4.48	12.92	4.55
							46	9.76	4.32	10.33	4.38	10.91	4.45	11.20	4.48	11.49	4.52	12.09	4.58	12.69	4.65

12. Capacity Table

12-6. AJ125TXJ5KH/EA

COOLING

Combination (Capacity Index)					Combination (Total)	Combination (%)	Outdoor Temperature (°C,DB)	Indoor Temperature (°F, WB)													
								14		16		18		19		20		22		24	
								TC(kW)	PI(kW)	TC(kW)	PI(kW)	TC(kW)	PI(kW)	TC(kW)	PI(kW)	TC(kW)	PI(kW)	TC(kW)	PI(kW)	TC(kW)	PI(kW)
2000	2500	2500	3500	6800	17300	124%	10	14.05	2.77	14.61	2.83	15.17	2.89	15.45	2.92	15.74	2.95	16.31	3.01	16.90	3.07
							12	13.81	2.85	14.36	2.91	14.93	2.96	15.21	2.99	15.50	3.02	16.07	3.08	16.66	3.14
							14	13.57	2.92	14.12	2.98	14.68	3.04	14.97	3.07	15.25	3.10	15.83	3.16	16.42	3.22
							16	13.32	3.00	13.88	3.06	14.44	3.12	14.73	3.15	15.02	3.18	15.60	3.24	16.18	3.30
							18	13.08	3.08	13.64	3.14	14.20	3.20	14.49	3.23	14.78	3.26	15.36	3.32	15.95	3.38
							20	12.84	3.16	13.40	3.22	13.96	3.28	14.25	3.31	14.54	3.34	15.12	3.40	15.71	3.46
							21	12.72	3.20	13.28	3.26	13.84	3.32	14.13	3.35	14.42	3.38	15.00	3.44	15.59	3.50
							23	12.48	3.28	13.04	3.34	13.61	3.40	13.89	3.43	14.18	3.46	14.77	3.53	15.36	3.59
							25	12.24	3.36	12.80	3.42	13.37	3.49	13.66	3.52	13.94	3.55	14.53	3.61	15.12	3.67
							27	12.00	3.45	12.56	3.51	13.13	3.57	13.42	3.60	13.71	3.63	14.29	3.70	14.89	3.76
							29	11.76	3.53	12.32	3.60	12.89	3.66	13.18	3.69	13.47	3.72	14.06	3.78	14.66	3.85
							31	11.52	3.62	12.09	3.68	12.66	3.75	12.95	3.78	13.24	3.81	13.83	3.87	14.42	3.94
							33	11.29	3.71	11.85	3.77	12.42	3.84	12.71	3.87	13.00	3.90	13.59	3.96	14.19	4.03
							35	11.05	3.80	11.61	3.86	12.19	3.93	12.50	3.95	12.77	3.99	13.36	4.05	13.96	4.12
							37	10.81	3.89	11.38	3.95	11.95	4.02	12.24	4.05	12.54	4.08	13.13	4.15	13.73	4.21
							39	10.58	3.98	11.14	4.05	11.72	4.11	12.01	4.14	12.30	4.18	12.90	4.24	13.50	4.31
							42	10.22	4.12	10.79	4.19	11.37	4.26	11.66	4.29	11.96	4.32	12.55	4.39	13.15	4.45
							44	9.99	4.22	10.56	4.29	11.14	4.35	11.43	4.39	11.72	4.42	12.32	4.48	12.92	4.55
							46	9.76	4.32	10.33	4.38	10.91	4.45	11.20	4.48	11.49	4.52	12.09	4.58	12.69	4.65
2000	2500	2500	5000	5000	17000	121%	10	14.05	2.77	14.61	2.83	15.17	2.89	15.45	2.92	15.74	2.95	16.31	3.01	16.90	3.07
							12	13.81	2.85	14.36	2.91	14.93	2.96	15.21	2.99	15.50	3.02	16.07	3.08	16.66	3.14
							14	13.57	2.92	14.12	2.98	14.68	3.04	14.97	3.07	15.25	3.10	15.83	3.16	16.42	3.22
							16	13.32	3.00	13.88	3.06	14.44	3.12	14.73	3.15	15.02	3.18	15.60	3.24	16.18	3.30
							18	13.08	3.08	13.64	3.14	14.20	3.20	14.49	3.23	14.78	3.26	15.36	3.32	15.95	3.38
							20	12.84	3.16	13.40	3.22	13.96	3.28	14.25	3.31	14.54	3.34	15.12	3.40	15.71	3.46
							21	12.72	3.20	13.28	3.26	13.84	3.32	14.13	3.35	14.42	3.38	15.00	3.44	15.59	3.50
							23	12.48	3.28	13.04	3.34	13.61	3.40	13.89	3.43	14.18	3.46	14.77	3.53	15.36	3.59
							25	12.24	3.36	12.80	3.42	13.37	3.49	13.66	3.52	13.94	3.55	14.53	3.61	15.12	3.67
							27	12.00	3.45	12.56	3.51	13.13	3.57	13.42	3.60	13.71	3.63	14.29	3.70	14.89	3.76
							29	11.76	3.53	12.32	3.60	12.89	3.66	13.18	3.69	13.47	3.72	14.06	3.78	14.66	3.85
							31	11.52	3.62	12.09	3.68	12.66	3.75	12.95	3.78	13.24	3.81	13.83	3.87	14.42	3.94
							33	11.29	3.71	11.85	3.77	12.42	3.84	12.71	3.87	13.00	3.90	13.59	3.96	14.19	4.03
							35	11.05	3.80	11.61	3.86	12.19	3.93	12.50	3.95	12.77	3.99	13.36	4.05	13.96	4.12
							37	10.81	3.89	11.38	3.95	11.95	4.02	12.24	4.05	12.54	4.08	13.13	4.15	13.73	4.21
							39	10.58	3.98	11.14	4.05	11.72	4.11	12.01	4.14	12.30	4.18	12.90	4.24	13.50	4.31
							42	10.22	4.12	10.79	4.19	11.37	4.26	11.66	4.29	11.96	4.32	12.55	4.39	13.15	4.45
							44	9.99	4.22	10.56	4.29	11.14	4.35	11.43	4.39	11.72	4.42	12.32	4.48	12.92	4.55
							46	9.76	4.32	10.33	4.38	10.91	4.45	11.20	4.48	11.49	4.52	12.09	4.58	12.69	4.65

12. Capacity Table

12-6. AJ125TXJ5KH/EA

COOLING

Combination (Capacity Index)					Combination (Total)	Combination (%)	Outdoor Temperature (°C,DB)	Indoor Temperature (°F, WB)													
								14		16		18		19		20		22		24	
								TC(kW)	PI(kW)	TC(kW)	PI(kW)	TC(kW)	PI(kW)	TC(kW)	PI(kW)	TC(kW)	PI(kW)	TC(kW)	PI(kW)	TC(kW)	PI(kW)
2000	2500	3500	3500	3500	15000	107%	10	14.05	2.77	14.61	2.83	15.17	2.89	15.45	2.92	15.74	2.95	16.31	3.01	16.90	3.07
							12	13.81	2.85	14.36	2.91	14.93	2.96	15.21	2.99	15.50	3.02	16.07	3.08	16.66	3.14
							14	13.57	2.92	14.12	2.98	14.68	3.04	14.97	3.07	15.25	3.10	15.83	3.16	16.42	3.22
							16	13.32	3.00	13.88	3.06	14.44	3.12	14.73	3.15	15.02	3.18	15.60	3.24	16.18	3.30
							18	13.08	3.08	13.64	3.14	14.20	3.20	14.49	3.23	14.78	3.26	15.36	3.32	15.95	3.38
							20	12.84	3.16	13.40	3.22	13.96	3.28	14.25	3.31	14.54	3.34	15.12	3.40	15.71	3.46
							21	12.72	3.20	13.28	3.26	13.84	3.32	14.13	3.35	14.42	3.38	15.00	3.44	15.59	3.50
							23	12.48	3.28	13.04	3.34	13.61	3.40	13.89	3.43	14.18	3.46	14.77	3.53	15.36	3.59
							25	12.24	3.36	12.80	3.42	13.37	3.49	13.66	3.52	13.94	3.55	14.53	3.61	15.12	3.67
							27	12.00	3.45	12.56	3.51	13.13	3.57	13.42	3.60	13.71	3.63	14.29	3.70	14.89	3.76
							29	11.76	3.53	12.32	3.60	12.89	3.66	13.18	3.69	13.47	3.72	14.06	3.78	14.66	3.85
							31	11.52	3.62	12.09	3.68	12.66	3.75	12.95	3.78	13.24	3.81	13.83	3.87	14.42	3.94
							33	11.29	3.71	11.85	3.77	12.42	3.84	12.71	3.87	13.00	3.90	13.59	3.96	14.19	4.03
							35	11.05	3.80	11.61	3.86	12.19	3.93	12.50	3.95	12.77	3.99	13.36	4.05	13.96	4.12
							37	10.81	3.89	11.38	3.95	11.95	4.02	12.24	4.05	12.54	4.08	13.13	4.15	13.73	4.21
							39	10.58	3.98	11.14	4.05	11.72	4.11	12.01	4.14	12.30	4.18	12.90	4.24	13.50	4.31
							42	10.22	4.12	10.79	4.19	11.37	4.26	11.66	4.29	11.96	4.32	12.55	4.39	13.15	4.45
							44	9.99	4.22	10.56	4.29	11.14	4.35	11.43	4.39	11.72	4.42	12.32	4.48	12.92	4.55
							46	9.76	4.32	10.33	4.38	10.91	4.45	11.20	4.48	11.49	4.52	12.09	4.58	12.69	4.65
2000	2500	3500	3500	5000	16500	118%	10	14.05	2.77	14.61	2.83	15.17	2.89	15.45	2.92	15.74	2.95	16.31	3.01	16.90	3.07
							12	13.81	2.85	14.36	2.91	14.93	2.96	15.21	2.99	15.50	3.02	16.07	3.08	16.66	3.14
							14	13.57	2.92	14.12	2.98	14.68	3.04	14.97	3.07	15.25	3.10	15.83	3.16	16.42	3.22
							16	13.32	3.00	13.88	3.06	14.44	3.12	14.73	3.15	15.02	3.18	15.60	3.24	16.18	3.30
							18	13.08	3.08	13.64	3.14	14.20	3.20	14.49	3.23	14.78	3.26	15.36	3.32	15.95	3.38
							20	12.84	3.16	13.40	3.22	13.96	3.28	14.25	3.31	14.54	3.34	15.12	3.40	15.71	3.46
							21	12.72	3.20	13.28	3.26	13.84	3.32	14.13	3.35	14.42	3.38	15.00	3.44	15.59	3.50
							23	12.48	3.28	13.04	3.34	13.61	3.40	13.89	3.43	14.18	3.46	14.77	3.53	15.36	3.59
							25	12.24	3.36	12.80	3.42	13.37	3.49	13.66	3.52	13.94	3.55	14.53	3.61	15.12	3.67
							27	12.00	3.45	12.56	3.51	13.13	3.57	13.42	3.60	13.71	3.63	14.29	3.70	14.89	3.76
							29	11.76	3.53	12.32	3.60	12.89	3.66	13.18	3.69	13.47	3.72	14.06	3.78	14.66	3.85
							31	11.52	3.62	12.09	3.68	12.66	3.75	12.95	3.78	13.24	3.81	13.83	3.87	14.42	3.94
							33	11.29	3.71	11.85	3.77	12.42	3.84	12.71	3.87	13.00	3.90	13.59	3.96	14.19	4.03
							35	11.05	3.80	11.61	3.86	12.19	3.93	12.50	3.95	12.77	3.99	13.36	4.05	13.96	4.12
							37	10.81	3.89	11.38	3.95	11.95	4.02	12.24	4.05	12.54	4.08	13.13	4.15	13.73	4.21
							39	10.58	3.98	11.14	4.05	11.72	4.11	12.01	4.14	12.30	4.18	12.90	4.24	13.50	4.31
							42	10.22	4.12	10.79	4.19	11.37	4.26	11.66	4.29	11.96	4.32	12.55	4.39	13.15	4.45
							44	9.99	4.22	10.56	4.29	11.14	4.35	11.43	4.39	11.72	4.42	12.32	4.48	12.92	4.55
							46	9.76	4.32	10.33	4.38	10.91	4.45	11.20	4.48	11.49	4.52	12.09	4.58	12.69	4.65

12. Capacity Table

12-6. AJ125TXJ5KH/EA

COOLING

Combination (Capacity Index)					Combination (Total)	Combination (%)	Outdoor Temperature (°C,DB)	Indoor Temperature (°F, WB)													
								14		16		18		19		20		22		24	
								TC(kW)	PI(kW)	TC(kW)	PI(kW)	TC(kW)	PI(kW)	TC(kW)	PI(kW)	TC(kW)	PI(kW)	TC(kW)	PI(kW)	TC(kW)	PI(kW)
2000	3500	3500	3500	3500	16000	114%	10	14.05	2.77	14.61	2.83	15.17	2.89	15.45	2.92	15.74	2.95	16.31	3.01	16.90	3.07
							12	13.81	2.85	14.36	2.91	14.93	2.96	15.21	2.99	15.50	3.02	16.07	3.08	16.66	3.14
							14	13.57	2.92	14.12	2.98	14.68	3.04	14.97	3.07	15.25	3.10	15.83	3.16	16.42	3.22
							16	13.32	3.00	13.88	3.06	14.44	3.12	14.73	3.15	15.02	3.18	15.60	3.24	16.18	3.30
							18	13.08	3.08	13.64	3.14	14.20	3.20	14.49	3.23	14.78	3.26	15.36	3.32	15.95	3.38
							20	12.84	3.16	13.40	3.22	13.96	3.28	14.25	3.31	14.54	3.34	15.12	3.40	15.71	3.46
							21	12.72	3.20	13.28	3.26	13.84	3.32	14.13	3.35	14.42	3.38	15.00	3.44	15.59	3.50
							23	12.48	3.28	13.04	3.34	13.61	3.40	13.89	3.43	14.18	3.46	14.77	3.53	15.36	3.59
							25	12.24	3.36	12.80	3.42	13.37	3.49	13.66	3.52	13.94	3.55	14.53	3.61	15.12	3.67
							27	12.00	3.45	12.56	3.51	13.13	3.57	13.42	3.60	13.71	3.63	14.29	3.70	14.89	3.76
							29	11.76	3.53	12.32	3.60	12.89	3.66	13.18	3.69	13.47	3.72	14.06	3.78	14.66	3.85
							31	11.52	3.62	12.09	3.68	12.66	3.75	12.95	3.78	13.24	3.81	13.83	3.87	14.42	3.94
							33	11.29	3.71	11.85	3.77	12.42	3.84	12.71	3.87	13.00	3.90	13.59	3.96	14.19	4.03
							35	11.05	3.80	11.61	3.86	12.19	3.93	12.50	3.95	12.77	3.99	13.36	4.05	13.96	4.12
							37	10.81	3.89	11.38	3.95	11.95	4.02	12.24	4.05	12.54	4.08	13.13	4.15	13.73	4.21
							39	10.58	3.98	11.14	4.05	11.72	4.11	12.01	4.14	12.30	4.18	12.90	4.24	13.50	4.31
							42	10.22	4.12	10.79	4.19	11.37	4.26	11.66	4.29	11.96	4.32	12.55	4.39	13.15	4.45
							44	9.99	4.22	10.56	4.29	11.14	4.35	11.43	4.39	11.72	4.42	12.32	4.48	12.92	4.55
							46	9.76	4.32	10.33	4.38	10.91	4.45	11.20	4.48	11.49	4.52	12.09	4.58	12.69	4.65
2000	3500	3500	3500	5000	17500	125%	10	14.05	2.77	14.61	2.83	15.17	2.89	15.45	2.92	15.74	2.95	16.31	3.01	16.90	3.07
							12	13.81	2.85	14.36	2.91	14.93	2.96	15.21	2.99	15.50	3.02	16.07	3.08	16.66	3.14
							14	13.57	2.92	14.12	2.98	14.68	3.04	14.97	3.07	15.25	3.10	15.83	3.16	16.42	3.22
							16	13.32	3.00	13.88	3.06	14.44	3.12	14.73	3.15	15.02	3.18	15.60	3.24	16.18	3.30
							18	13.08	3.08	13.64	3.14	14.20	3.20	14.49	3.23	14.78	3.26	15.36	3.32	15.95	3.38
							20	12.84	3.16	13.40	3.22	13.96	3.28	14.25	3.31	14.54	3.34	15.12	3.40	15.71	3.46
							21	12.72	3.20	13.28	3.26	13.84	3.32	14.13	3.35	14.42	3.38	15.00	3.44	15.59	3.50
							23	12.48	3.28	13.04	3.34	13.61	3.40	13.89	3.43	14.18	3.46	14.77	3.53	15.36	3.59
							25	12.24	3.36	12.80	3.42	13.37	3.49	13.66	3.52	13.94	3.55	14.53	3.61	15.12	3.67
							27	12.00	3.45	12.56	3.51	13.13	3.57	13.42	3.60	13.71	3.63	14.29	3.70	14.89	3.76
							29	11.76	3.53	12.32	3.60	12.89	3.66	13.18	3.69	13.47	3.72	14.06	3.78	14.66	3.85
							31	11.52	3.62	12.09	3.68	12.66	3.75	12.95	3.78	13.24	3.81	13.83	3.87	14.42	3.94
							33	11.29	3.71	11.85	3.77	12.42	3.84	12.71	3.87	13.00	3.90	13.59	3.96	14.19	4.03
							35	11.05	3.80	11.61	3.86	12.19	3.93	12.50	3.95	12.77	3.99	13.36	4.05	13.96	4.12
							37	10.81	3.89	11.38	3.95	11.95	4.02	12.24	4.05	12.54	4.08	13.13	4.15	13.73	4.21
							39	10.58	3.98	11.14	4.05	11.72	4.11	12.01	4.14	12.30	4.18	12.90	4.24	13.50	4.31
							42	10.22	4.12	10.79	4.19	11.37	4.26	11.66	4.29	11.96	4.32	12.55	4.39	13.15	4.45
							44	9.99	4.22	10.56	4.29	11.14	4.35	11.43	4.39	11.72	4.42	12.32	4.48	12.92	4.55
							46	9.76	4.32	10.33	4.38	10.91	4.45	11.20	4.48	11.49	4.52	12.09	4.58	12.69	4.65

12. Capacity Table

12-6. AJ125TXJ5KH/EA

COOLING

Combination (Capacity Index)					Combination (Total)	Combination (%)	Outdoor Temperature (°C,DB)	Indoor Temperature (°F, WB)													
								14		16		18		19		20		22		24	
								TC(kW)	PI(kW)	TC(kW)	PI(kW)	TC(kW)	PI(kW)	TC(kW)	PI(kW)	TC(kW)	PI(kW)	TC(kW)	PI(kW)	TC(kW)	PI(kW)
2500	2500	2500	2500	2500	12500	89%	10	11.05	2.78	15.58	2.85	15.88	2.91	16.06	2.95	16.25	2.98	16.71	3.04	17.24	3.10
							12	11.05	2.84	15.16	2.91	15.48	2.98	15.66	3.02	15.87	3.05	16.35	3.11	16.90	3.17
							14	11.05	2.92	14.75	2.99	15.09	3.05	15.29	3.09	15.51	3.12	16.01	3.18	16.58	3.24
							16	11.05	2.99	14.36	3.06	14.72	3.13	14.93	3.16	15.16	3.19	15.68	3.25	16.28	3.31
							18	11.05	3.07	13.99	3.14	14.37	3.20	14.59	3.23	14.83	3.27	15.37	3.33	15.99	3.39
							20	11.05	3.14	13.64	3.21	14.04	3.28	14.27	3.31	14.52	3.34	15.08	3.41	15.73	3.47
							21	11.05	3.18	13.47	3.25	13.88	3.32	14.12	3.35	14.37	3.38	14.95	3.45	15.60	3.50
							23	11.05	3.27	13.14	3.33	13.57	3.40	13.82	3.43	14.09	3.46	14.68	3.53	15.36	3.58
							25	11.05	3.35	12.83	3.42	13.28	3.48	13.54	3.51	13.82	3.55	14.44	3.61	15.13	3.67
							27	11.05	3.43	12.53	3.50	13.01	3.57	13.28	3.60	13.57	3.63	14.21	3.69	14.92	3.75
							29	11.05	3.52	12.26	3.59	12.76	3.65	13.04	3.69	13.34	3.72	14.00	3.78	14.73	3.84
							31	11.05	3.61	12.00	3.68	12.52	3.74	12.81	3.78	13.12	3.81	13.80	3.87	14.56	3.92
							33	11.05	3.70	11.76	3.77	12.30	3.83	12.60	3.87	12.92	3.90	13.62	3.96	14.41	4.02
							35	11.05	3.80	11.53	3.86	12.10	3.93	12.50	3.95	12.74	3.99	13.46	4.05	14.27	4.11
							37	11.05	3.89	11.32	3.96	11.91	4.02	12.23	4.05	12.58	4.09	13.32	4.15	14.15	4.20
							39	11.05	3.99	11.14	4.06	11.74	4.12	12.08	4.15	12.43	4.18	13.20	4.24	14.05	4.30
							42	11.05	4.14	10.88	4.21	11.52	4.27	11.87	4.30	12.24	4.33	13.04	4.39	13.92	4.45
							44	11.05	4.24	10.74	4.31	11.40	4.37	11.76	4.40	12.14	4.43	12.96	4.49	13.86	4.55
							46	11.05	4.35	10.61	4.42	11.29	4.48	11.66	4.51	12.06	4.54	12.90	4.60	13.82	4.65
2500	2500	2500	2500	3500	13500	96%	10	14.05	2.77	14.61	2.83	15.17	2.89	15.45	2.92	15.74	2.95	16.31	3.01	16.90	3.07
							12	13.81	2.85	14.36	2.91	14.93	2.96	15.21	2.99	15.50	3.02	16.07	3.08	16.66	3.14
							14	13.57	2.92	14.12	2.98	14.68	3.04	14.97	3.07	15.25	3.10	15.83	3.16	16.42	3.22
							16	13.32	3.00	13.88	3.06	14.44	3.12	14.73	3.15	15.02	3.18	15.60	3.24	16.18	3.30
							18	13.08	3.08	13.64	3.14	14.20	3.20	14.49	3.23	14.78	3.26	15.36	3.32	15.95	3.38
							20	12.84	3.16	13.40	3.22	13.96	3.28	14.25	3.31	14.54	3.34	15.12	3.40	15.71	3.46
							21	12.72	3.20	13.28	3.26	13.84	3.32	14.13	3.35	14.42	3.38	15.00	3.44	15.59	3.50
							23	12.48	3.28	13.04	3.34	13.61	3.40	13.89	3.43	14.18	3.46	14.77	3.53	15.36	3.59
							25	12.24	3.36	12.80	3.42	13.37	3.49	13.66	3.52	13.94	3.55	14.53	3.61	15.12	3.67
							27	12.00	3.45	12.56	3.51	13.13	3.57	13.42	3.60	13.71	3.63	14.29	3.70	14.89	3.76
							29	11.76	3.53	12.32	3.60	12.89	3.66	13.18	3.69	13.47	3.72	14.06	3.78	14.66	3.85
							31	11.52	3.62	12.09	3.68	12.66	3.75	12.95	3.78	13.24	3.81	13.83	3.87	14.42	3.94
							33	11.29	3.71	11.85	3.77	12.42	3.84	12.71	3.87	13.00	3.90	13.59	3.96	14.19	4.03
							35	11.05	3.80	11.61	3.86	12.19	3.93	12.50	3.95	12.77	3.99	13.36	4.05	13.96	4.12
							37	10.81	3.89	11.38	3.95	11.95	4.02	12.24	4.05	12.54	4.08	13.13	4.15	13.73	4.21
							39	10.58	3.98	11.14	4.05	11.72	4.11	12.01	4.14	12.30	4.18	12.90	4.24	13.50	4.31
							42	10.22	4.12	10.79	4.19	11.37	4.26	11.66	4.29	11.96	4.32	12.55	4.39	13.15	4.45
							44	9.99	4.22	10.56	4.29	11.14	4.35	11.43	4.39	11.72	4.42	12.32	4.48	12.92	4.55
							46	9.76	4.32	10.33	4.38	10.91	4.45	11.20	4.48	11.49	4.52	12.09	4.58	12.69	4.65

12. Capacity Table

12-6. AJ125TXJ5KH/EA

COOLING

Combination (Capacity Index)					Combination (Total)	Combination (%)	Outdoor Temperature (°C,DB)	Indoor Temperature (°F, WB)													
								14		16		18		19		20		22		24	
								TC(kW)	PI(kW)	TC(kW)	PI(kW)	TC(kW)	PI(kW)	TC(kW)	PI(kW)	TC(kW)	PI(kW)	TC(kW)	PI(kW)	TC(kW)	PI(kW)
2500	2500	2500	2500	5000	15000	107%	10	14.05	2.77	14.61	2.83	15.17	2.89	15.45	2.92	15.74	2.95	16.31	3.01	16.90	3.07
							12	13.81	2.85	14.36	2.91	14.93	2.96	15.21	2.99	15.50	3.02	16.07	3.08	16.66	3.14
							14	13.57	2.92	14.12	2.98	14.68	3.04	14.97	3.07	15.25	3.10	15.83	3.16	16.42	3.22
							16	13.32	3.00	13.88	3.06	14.44	3.12	14.73	3.15	15.02	3.18	15.60	3.24	16.18	3.30
							18	13.08	3.08	13.64	3.14	14.20	3.20	14.49	3.23	14.78	3.26	15.36	3.32	15.95	3.38
							20	12.84	3.16	13.40	3.22	13.96	3.28	14.25	3.31	14.54	3.34	15.12	3.40	15.71	3.46
							21	12.72	3.20	13.28	3.26	13.84	3.32	14.13	3.35	14.42	3.38	15.00	3.44	15.59	3.50
							23	12.48	3.28	13.04	3.34	13.61	3.40	13.89	3.43	14.18	3.46	14.77	3.53	15.36	3.59
							25	12.24	3.36	12.80	3.42	13.37	3.49	13.66	3.52	13.94	3.55	14.53	3.61	15.12	3.67
							27	12.00	3.45	12.56	3.51	13.13	3.57	13.42	3.60	13.71	3.63	14.29	3.70	14.89	3.76
							29	11.76	3.53	12.32	3.60	12.89	3.66	13.18	3.69	13.47	3.72	14.06	3.78	14.66	3.85
							31	11.52	3.62	12.09	3.68	12.66	3.75	12.95	3.78	13.24	3.81	13.83	3.87	14.42	3.94
							33	11.29	3.71	11.85	3.77	12.42	3.84	12.71	3.87	13.00	3.90	13.59	3.96	14.19	4.03
							35	11.05	3.80	11.61	3.86	12.19	3.93	12.50	3.95	12.77	3.99	13.36	4.05	13.96	4.12
							37	10.81	3.89	11.38	3.95	11.95	4.02	12.24	4.05	12.54	4.08	13.13	4.15	13.73	4.21
							39	10.58	3.98	11.14	4.05	11.72	4.11	12.01	4.14	12.30	4.18	12.90	4.24	13.50	4.31
							42	10.22	4.12	10.79	4.19	11.37	4.26	11.66	4.29	11.96	4.32	12.55	4.39	13.15	4.45
							44	9.99	4.22	10.56	4.29	11.14	4.35	11.43	4.39	11.72	4.42	12.32	4.48	12.92	4.55
							46	9.76	4.32	10.33	4.38	10.91	4.45	11.20	4.48	11.49	4.52	12.09	4.58	12.69	4.65
2500	2500	2500	2500	6800	16800	120%	10	14.05	2.77	14.61	2.83	15.17	2.89	15.45	2.92	15.74	2.95	16.31	3.01	16.90	3.07
							12	13.81	2.85	14.36	2.91	14.93	2.96	15.21	2.99	15.50	3.02	16.07	3.08	16.66	3.14
							14	13.57	2.92	14.12	2.98	14.68	3.04	14.97	3.07	15.25	3.10	15.83	3.16	16.42	3.22
							16	13.32	3.00	13.88	3.06	14.44	3.12	14.73	3.15	15.02	3.18	15.60	3.24	16.18	3.30
							18	13.08	3.08	13.64	3.14	14.20	3.20	14.49	3.23	14.78	3.26	15.36	3.32	15.95	3.38
							20	12.84	3.16	13.40	3.22	13.96	3.28	14.25	3.31	14.54	3.34	15.12	3.40	15.71	3.46
							21	12.72	3.20	13.28	3.26	13.84	3.32	14.13	3.35	14.42	3.38	15.00	3.44	15.59	3.50
							23	12.48	3.28	13.04	3.34	13.61	3.40	13.89	3.43	14.18	3.46	14.77	3.53	15.36	3.59
							25	12.24	3.36	12.80	3.42	13.37	3.49	13.66	3.52	13.94	3.55	14.53	3.61	15.12	3.67
							27	12.00	3.45	12.56	3.51	13.13	3.57	13.42	3.60	13.71	3.63	14.29	3.70	14.89	3.76
							29	11.76	3.53	12.32	3.60	12.89	3.66	13.18	3.69	13.47	3.72	14.06	3.78	14.66	3.85
							31	11.52	3.62	12.09	3.68	12.66	3.75	12.95	3.78	13.24	3.81	13.83	3.87	14.42	3.94
							33	11.29	3.71	11.85	3.77	12.42	3.84	12.71	3.87	13.00	3.90	13.59	3.96	14.19	4.03
							35	11.05	3.80	11.61	3.86	12.19	3.93	12.50	3.95	12.77	3.99	13.36	4.05	13.96	4.12
							37	10.81	3.89	11.38	3.95	11.95	4.02	12.24	4.05	12.54	4.08	13.13	4.15	13.73	4.21
							39	10.58	3.98	11.14	4.05	11.72	4.11	12.01	4.14	12.30	4.18	12.90	4.24	13.50	4.31
							42	10.22	4.12	10.79	4.19	11.37	4.26	11.66	4.29	11.96	4.32	12.55	4.39	13.15	4.45
							44	9.99	4.22	10.56	4.29	11.14	4.35	11.43	4.39	11.72	4.42	12.32	4.48	12.92	4.55
							46	9.76	4.32	10.33	4.38	10.91	4.45	11.20	4.48	11.49	4.52	12.09	4.58	12.69	4.65

12. Capacity Table

12-6. AJ125TXJ5KH/EA

COOLING

Combination (Capacity Index)					Combination (Total)	Combination (%)	Outdoor Temperature (°C,DB)	Indoor Temperature (°F, WB)													
								14		16		18		19		20		22		24	
								TC(kW)	PI(kW)	TC(kW)	PI(kW)	TC(kW)	PI(kW)	TC(kW)	PI(kW)	TC(kW)	PI(kW)	TC(kW)	PI(kW)	TC(kW)	PI(kW)
2500	2500	2500	3500	3500	14500	104%	10	14.05	2.77	14.61	2.83	15.17	2.89	15.45	2.92	15.74	2.95	16.31	3.01	16.90	3.07
							12	13.81	2.85	14.36	2.91	14.93	2.96	15.21	2.99	15.50	3.02	16.07	3.08	16.66	3.14
							14	13.57	2.92	14.12	2.98	14.68	3.04	14.97	3.07	15.25	3.10	15.83	3.16	16.42	3.22
							16	13.32	3.00	13.88	3.06	14.44	3.12	14.73	3.15	15.02	3.18	15.60	3.24	16.18	3.30
							18	13.08	3.08	13.64	3.14	14.20	3.20	14.49	3.23	14.78	3.26	15.36	3.32	15.95	3.38
							20	12.84	3.16	13.40	3.22	13.96	3.28	14.25	3.31	14.54	3.34	15.12	3.40	15.71	3.46
							21	12.72	3.20	13.28	3.26	13.84	3.32	14.13	3.35	14.42	3.38	15.00	3.44	15.59	3.50
							23	12.48	3.28	13.04	3.34	13.61	3.40	13.89	3.43	14.18	3.46	14.77	3.53	15.36	3.59
							25	12.24	3.36	12.80	3.42	13.37	3.49	13.66	3.52	13.94	3.55	14.53	3.61	15.12	3.67
							27	12.00	3.45	12.56	3.51	13.13	3.57	13.42	3.60	13.71	3.63	14.29	3.70	14.89	3.76
							29	11.76	3.53	12.32	3.60	12.89	3.66	13.18	3.69	13.47	3.72	14.06	3.78	14.66	3.85
							31	11.52	3.62	12.09	3.68	12.66	3.75	12.95	3.78	13.24	3.81	13.83	3.87	14.42	3.94
							33	11.29	3.71	11.85	3.77	12.42	3.84	12.71	3.87	13.00	3.90	13.59	3.96	14.19	4.03
							35	11.05	3.80	11.61	3.86	12.19	3.93	12.50	3.95	12.77	3.99	13.36	4.05	13.96	4.12
							37	10.81	3.89	11.38	3.95	11.95	4.02	12.24	4.05	12.54	4.08	13.13	4.15	13.73	4.21
							39	10.58	3.98	11.14	4.05	11.72	4.11	12.01	4.14	12.30	4.18	12.90	4.24	13.50	4.31
							42	10.22	4.12	10.79	4.19	11.37	4.26	11.66	4.29	11.96	4.32	12.55	4.39	13.15	4.45
							44	9.99	4.22	10.56	4.29	11.14	4.35	11.43	4.39	11.72	4.42	12.32	4.48	12.92	4.55
							46	9.76	4.32	10.33	4.38	10.91	4.45	11.20	4.48	11.49	4.52	12.09	4.58	12.69	4.65
2500	2500	2500	3500	5000	16000	114%	10	14.05	2.77	14.61	2.83	15.17	2.89	15.45	2.92	15.74	2.95	16.31	3.01	16.90	3.07
							12	13.81	2.85	14.36	2.91	14.93	2.96	15.21	2.99	15.50	3.02	16.07	3.08	16.66	3.14
							14	13.57	2.92	14.12	2.98	14.68	3.04	14.97	3.07	15.25	3.10	15.83	3.16	16.42	3.22
							16	13.32	3.00	13.88	3.06	14.44	3.12	14.73	3.15	15.02	3.18	15.60	3.24	16.18	3.30
							18	13.08	3.08	13.64	3.14	14.20	3.20	14.49	3.23	14.78	3.26	15.36	3.32	15.95	3.38
							20	12.84	3.16	13.40	3.22	13.96	3.28	14.25	3.31	14.54	3.34	15.12	3.40	15.71	3.46
							21	12.72	3.20	13.28	3.26	13.84	3.32	14.13	3.35	14.42	3.38	15.00	3.44	15.59	3.50
							23	12.48	3.28	13.04	3.34	13.61	3.40	13.89	3.43	14.18	3.46	14.77	3.53	15.36	3.59
							25	12.24	3.36	12.80	3.42	13.37	3.49	13.66	3.52	13.94	3.55	14.53	3.61	15.12	3.67
							27	12.00	3.45	12.56	3.51	13.13	3.57	13.42	3.60	13.71	3.63	14.29	3.70	14.89	3.76
							29	11.76	3.53	12.32	3.60	12.89	3.66	13.18	3.69	13.47	3.72	14.06	3.78	14.66	3.85
							31	11.52	3.62	12.09	3.68	12.66	3.75	12.95	3.78	13.24	3.81	13.83	3.87	14.42	3.94
							33	11.29	3.71	11.85	3.77	12.42	3.84	12.71	3.87	13.00	3.90	13.59	3.96	14.19	4.03
							35	11.05	3.80	11.61	3.86	12.19	3.93	12.50	3.95	12.77	3.99	13.36	4.05	13.96	4.12
							37	10.81	3.89	11.38	3.95	11.95	4.02	12.24	4.05	12.54	4.08	13.13	4.15	13.73	4.21
							39	10.58	3.98	11.14	4.05	11.72	4.11	12.01	4.14	12.30	4.18	12.90	4.24	13.50	4.31
							42	10.22	4.12	10.79	4.19	11.37	4.26	11.66	4.29	11.96	4.32	12.55	4.39	13.15	4.45
							44	9.99	4.22	10.56	4.29	11.14	4.35	11.43	4.39	11.72	4.42	12.32	4.48	12.92	4.55
							46	9.76	4.32	10.33	4.38	10.91	4.45	11.20	4.48	11.49	4.52	12.09	4.58	12.69	4.65

12. Capacity Table

12-6. AJ125TXJ5KH/EA

COOLING

Combination (Capacity Index)					Combination (Total)	Combination (%)	Outdoor Temperature (°C,DB)	Indoor Temperature (°F, WB)													
								14		16		18		19		20		22		24	
								TC(kW)	PI(kW)	TC(kW)	PI(kW)	TC(kW)	PI(kW)	TC(kW)	PI(kW)	TC(kW)	PI(kW)	TC(kW)	PI(kW)	TC(kW)	PI(kW)
2500	2500	2500	5000	5000	17500	125%	10	14.05	2.77	14.61	2.83	15.17	2.89	15.45	2.92	15.74	2.95	16.31	3.01	16.90	3.07
							12	13.81	2.85	14.36	2.91	14.93	2.96	15.21	2.99	15.50	3.02	16.07	3.08	16.66	3.14
							14	13.57	2.92	14.12	2.98	14.68	3.04	14.97	3.07	15.25	3.10	15.83	3.16	16.42	3.22
							16	13.32	3.00	13.88	3.06	14.44	3.12	14.73	3.15	15.02	3.18	15.60	3.24	16.18	3.30
							18	13.08	3.08	13.64	3.14	14.20	3.20	14.49	3.23	14.78	3.26	15.36	3.32	15.95	3.38
							20	12.84	3.16	13.40	3.22	13.96	3.28	14.25	3.31	14.54	3.34	15.12	3.40	15.71	3.46
							21	12.72	3.20	13.28	3.26	13.84	3.32	14.13	3.35	14.42	3.38	15.00	3.44	15.59	3.50
							23	12.48	3.28	13.04	3.34	13.61	3.40	13.89	3.43	14.18	3.46	14.77	3.53	15.36	3.59
							25	12.24	3.36	12.80	3.42	13.37	3.49	13.66	3.52	13.94	3.55	14.53	3.61	15.12	3.67
							27	12.00	3.45	12.56	3.51	13.13	3.57	13.42	3.60	13.71	3.63	14.29	3.70	14.89	3.76
							29	11.76	3.53	12.32	3.60	12.89	3.66	13.18	3.69	13.47	3.72	14.06	3.78	14.66	3.85
							31	11.52	3.62	12.09	3.68	12.66	3.75	12.95	3.78	13.24	3.81	13.83	3.87	14.42	3.94
							33	11.29	3.71	11.85	3.77	12.42	3.84	12.71	3.87	13.00	3.90	13.59	3.96	14.19	4.03
							35	11.05	3.80	11.61	3.86	12.19	3.93	12.50	3.95	12.77	3.99	13.36	4.05	13.96	4.12
							37	10.81	3.89	11.38	3.95	11.95	4.02	12.24	4.05	12.54	4.08	13.13	4.15	13.73	4.21
							39	10.58	3.98	11.14	4.05	11.72	4.11	12.01	4.14	12.30	4.18	12.90	4.24	13.50	4.31
							42	10.22	4.12	10.79	4.19	11.37	4.26	11.66	4.29	11.96	4.32	12.55	4.39	13.15	4.45
							44	9.99	4.22	10.56	4.29	11.14	4.35	11.43	4.39	11.72	4.42	12.32	4.48	12.92	4.55
							46	9.76	4.32	10.33	4.38	10.91	4.45	11.20	4.48	11.49	4.52	12.09	4.58	12.69	4.65
2500	2500	3500	3500	3500	15500	111%	10	14.05	2.77	14.61	2.83	15.17	2.89	15.45	2.92	15.74	2.95	16.31	3.01	16.90	3.07
							12	13.81	2.85	14.36	2.91	14.93	2.96	15.21	2.99	15.50	3.02	16.07	3.08	16.66	3.14
							14	13.57	2.92	14.12	2.98	14.68	3.04	14.97	3.07	15.25	3.10	15.83	3.16	16.42	3.22
							16	13.32	3.00	13.88	3.06	14.44	3.12	14.73	3.15	15.02	3.18	15.60	3.24	16.18	3.30
							18	13.08	3.08	13.64	3.14	14.20	3.20	14.49	3.23	14.78	3.26	15.36	3.32	15.95	3.38
							20	12.84	3.16	13.40	3.22	13.96	3.28	14.25	3.31	14.54	3.34	15.12	3.40	15.71	3.46
							21	12.72	3.20	13.28	3.26	13.84	3.32	14.13	3.35	14.42	3.38	15.00	3.44	15.59	3.50
							23	12.48	3.28	13.04	3.34	13.61	3.40	13.89	3.43	14.18	3.46	14.77	3.53	15.36	3.59
							25	12.24	3.36	12.80	3.42	13.37	3.49	13.66	3.52	13.94	3.55	14.53	3.61	15.12	3.67
							27	12.00	3.45	12.56	3.51	13.13	3.57	13.42	3.60	13.71	3.63	14.29	3.70	14.89	3.76
							29	11.76	3.53	12.32	3.60	12.89	3.66	13.18	3.69	13.47	3.72	14.06	3.78	14.66	3.85
							31	11.52	3.62	12.09	3.68	12.66	3.75	12.95	3.78	13.24	3.81	13.83	3.87	14.42	3.94
							33	11.29	3.71	11.85	3.77	12.42	3.84	12.71	3.87	13.00	3.90	13.59	3.96	14.19	4.03
							35	11.05	3.80	11.61	3.86	12.19	3.93	12.50	3.95	12.77	3.99	13.36	4.05	13.96	4.12
							37	10.81	3.89	11.38	3.95	11.95	4.02	12.24	4.05	12.54	4.08	13.13	4.15	13.73	4.21
							39	10.58	3.98	11.14	4.05	11.72	4.11	12.01	4.14	12.30	4.18	12.90	4.24	13.50	4.31
							42	10.22	4.12	10.79	4.19	11.37	4.26	11.66	4.29	11.96	4.32	12.55	4.39	13.15	4.45
							44	9.99	4.22	10.56	4.29	11.14	4.35	11.43	4.39	11.72	4.42	12.32	4.48	12.92	4.55
							46	9.76	4.32	10.33	4.38	10.91	4.45	11.20	4.48	11.49	4.52	12.09	4.58	12.69	4.65

12. Capacity Table

12-6. AJ125TXJ5KH/EA

COOLING

Combination (Capacity Index)					Combination (Total)	Combination (%)	Outdoor Temperature (°C,DB)	Indoor Temperature (°F, WB)													
								14		16		18		19		20		22		24	
								TC(kW)	PI(kW)	TC(kW)	PI(kW)	TC(kW)	PI(kW)	TC(kW)	PI(kW)	TC(kW)	PI(kW)	TC(kW)	PI(kW)	TC(kW)	PI(kW)
2500	2500	3500	3500	5000	17000	121%	10	14.05	2.77	14.61	2.83	15.17	2.89	15.45	2.92	15.74	2.95	16.31	3.01	16.90	3.07
							12	13.81	2.85	14.36	2.91	14.93	2.96	15.21	2.99	15.50	3.02	16.07	3.08	16.66	3.14
							14	13.57	2.92	14.12	2.98	14.68	3.04	14.97	3.07	15.25	3.10	15.83	3.16	16.42	3.22
							16	13.32	3.00	13.88	3.06	14.44	3.12	14.73	3.15	15.02	3.18	15.60	3.24	16.18	3.30
							18	13.08	3.08	13.64	3.14	14.20	3.20	14.49	3.23	14.78	3.26	15.36	3.32	15.95	3.38
							20	12.84	3.16	13.40	3.22	13.96	3.28	14.25	3.31	14.54	3.34	15.12	3.40	15.71	3.46
							21	12.72	3.20	13.28	3.26	13.84	3.32	14.13	3.35	14.42	3.38	15.00	3.44	15.59	3.50
							23	12.48	3.28	13.04	3.34	13.61	3.40	13.89	3.43	14.18	3.46	14.77	3.53	15.36	3.59
							25	12.24	3.36	12.80	3.42	13.37	3.49	13.66	3.52	13.94	3.55	14.53	3.61	15.12	3.67
							27	12.00	3.45	12.56	3.51	13.13	3.57	13.42	3.60	13.71	3.63	14.29	3.70	14.89	3.76
							29	11.76	3.53	12.32	3.60	12.89	3.66	13.18	3.69	13.47	3.72	14.06	3.78	14.66	3.85
							31	11.52	3.62	12.09	3.68	12.66	3.75	12.95	3.78	13.24	3.81	13.83	3.87	14.42	3.94
							33	11.29	3.71	11.85	3.77	12.42	3.84	12.71	3.87	13.00	3.90	13.59	3.96	14.19	4.03
							35	11.05	3.80	11.61	3.86	12.19	3.93	12.50	3.95	12.77	3.99	13.36	4.05	13.96	4.12
							37	10.81	3.89	11.38	3.95	11.95	4.02	12.24	4.05	12.54	4.08	13.13	4.15	13.73	4.21
							39	10.58	3.98	11.14	4.05	11.72	4.11	12.01	4.14	12.30	4.18	12.90	4.24	13.50	4.31
							42	10.22	4.12	10.79	4.19	11.37	4.26	11.66	4.29	11.96	4.32	12.55	4.39	13.15	4.45
							44	9.99	4.22	10.56	4.29	11.14	4.35	11.43	4.39	11.72	4.42	12.32	4.48	12.92	4.55
							46	9.76	4.32	10.33	4.38	10.91	4.45	11.20	4.48	11.49	4.52	12.09	4.58	12.69	4.65
2500	3500	3500	3500	3500	16500	118%	10	14.05	2.77	14.61	2.83	15.17	2.89	15.45	2.92	15.74	2.95	16.31	3.01	16.90	3.07
							12	13.81	2.85	14.36	2.91	14.93	2.96	15.21	2.99	15.50	3.02	16.07	3.08	16.66	3.14
							14	13.57	2.92	14.12	2.98	14.68	3.04	14.97	3.07	15.25	3.10	15.83	3.16	16.42	3.22
							16	13.32	3.00	13.88	3.06	14.44	3.12	14.73	3.15	15.02	3.18	15.60	3.24	16.18	3.30
							18	13.08	3.08	13.64	3.14	14.20	3.20	14.49	3.23	14.78	3.26	15.36	3.32	15.95	3.38
							20	12.84	3.16	13.40	3.22	13.96	3.28	14.25	3.31	14.54	3.34	15.12	3.40	15.71	3.46
							21	12.72	3.20	13.28	3.26	13.84	3.32	14.13	3.35	14.42	3.38	15.00	3.44	15.59	3.50
							23	12.48	3.28	13.04	3.34	13.61	3.40	13.89	3.43	14.18	3.46	14.77	3.53	15.36	3.59
							25	12.24	3.36	12.80	3.42	13.37	3.49	13.66	3.52	13.94	3.55	14.53	3.61	15.12	3.67
							27	12.00	3.45	12.56	3.51	13.13	3.57	13.42	3.60	13.71	3.63	14.29	3.70	14.89	3.76
							29	11.76	3.53	12.32	3.60	12.89	3.66	13.18	3.69	13.47	3.72	14.06	3.78	14.66	3.85
							31	11.52	3.62	12.09	3.68	12.66	3.75	12.95	3.78	13.24	3.81	13.83	3.87	14.42	3.94
							33	11.29	3.71	11.85	3.77	12.42	3.84	12.71	3.87	13.00	3.90	13.59	3.96	14.19	4.03
							35	11.05	3.80	11.61	3.86	12.19	3.93	12.50	3.95	12.77	3.99	13.36	4.05	13.96	4.12
							37	10.81	3.89	11.38	3.95	11.95	4.02	12.24	4.05	12.54	4.08	13.13	4.15	13.73	4.21
							39	10.58	3.98	11.14	4.05	11.72	4.11	12.01	4.14	12.30	4.18	12.90	4.24	13.50	4.31
							42	10.22	4.12	10.79	4.19	11.37	4.26	11.66	4.29	11.96	4.32	12.55	4.39	13.15	4.45
							44	9.99	4.22	10.56	4.29	11.14	4.35	11.43	4.39	11.72	4.42	12.32	4.48	12.92	4.55
							46	9.76	4.32	10.33	4.38	10.91	4.45	11.20	4.48	11.49	4.52	12.09	4.58	12.69	4.65

12. Capacity Table

12-6. AJ125TXJ5KH/EA

COOLING

Combination (Capacity Index)					Combination (Total)	Combination (%)	Outdoor Temperature (°C,DB)	Indoor Temperature (°F, WB)													
								14		16		18		19		20		22		24	
								TC(kW)	PI(kW)	TC(kW)	PI(kW)	TC(kW)	PI(kW)	TC(kW)	PI(kW)	TC(kW)	PI(kW)	TC(kW)	PI(kW)	TC(kW)	PI(kW)
3500	3500	3500	3500	3500	17500	125%	10	14.05	2.77	14.61	2.83	15.17	2.89	15.45	2.92	15.74	2.95	16.31	3.01	16.90	3.07
							12	13.81	2.85	14.36	2.91	14.93	2.96	15.21	2.99	15.50	3.02	16.07	3.08	16.66	3.14
							14	13.57	2.92	14.12	2.98	14.68	3.04	14.97	3.07	15.25	3.10	15.83	3.16	16.42	3.22
							16	13.32	3.00	13.88	3.06	14.44	3.12	14.73	3.15	15.02	3.18	15.60	3.24	16.18	3.30
							18	13.08	3.08	13.64	3.14	14.20	3.20	14.49	3.23	14.78	3.26	15.36	3.32	15.95	3.38
							20	12.84	3.16	13.40	3.22	13.96	3.28	14.25	3.31	14.54	3.34	15.12	3.40	15.71	3.46
							21	12.72	3.20	13.28	3.26	13.84	3.32	14.13	3.35	14.42	3.38	15.00	3.44	15.59	3.50
							23	12.48	3.28	13.04	3.34	13.61	3.40	13.89	3.43	14.18	3.46	14.77	3.53	15.36	3.59
							25	12.24	3.36	12.80	3.42	13.37	3.49	13.66	3.52	13.94	3.55	14.53	3.61	15.12	3.67
							27	12.00	3.45	12.56	3.51	13.13	3.57	13.42	3.60	13.71	3.63	14.29	3.70	14.89	3.76
							29	11.76	3.53	12.32	3.60	12.89	3.66	13.18	3.69	13.47	3.72	14.06	3.78	14.66	3.85
							31	11.52	3.62	12.09	3.68	12.66	3.75	12.95	3.78	13.24	3.81	13.83	3.87	14.42	3.94
							33	11.29	3.71	11.85	3.77	12.42	3.84	12.71	3.87	13.00	3.90	13.59	3.96	14.19	4.03
							35	11.05	3.80	11.61	3.86	12.19	3.93	12.50	3.95	12.77	3.99	13.36	4.05	13.96	4.12
							37	10.81	3.89	11.38	3.95	11.95	4.02	12.24	4.05	12.54	4.08	13.13	4.15	13.73	4.21
							39	10.58	3.98	11.14	4.05	11.72	4.11	12.01	4.14	12.30	4.18	12.90	4.24	13.50	4.31
							42	10.22	4.12	10.79	4.19	11.37	4.26	11.66	4.29	11.96	4.32	12.55	4.39	13.15	4.45
							44	9.99	4.22	10.56	4.29	11.14	4.35	11.43	4.39	11.72	4.42	12.32	4.48	12.92	4.55
							46	9.76	4.32	10.33	4.38	10.91	4.45	11.20	4.48	11.49	4.52	12.09	4.58	12.69	4.65

NOTE

1 Cooling capacity is based on 27°CDB / 19°CWB (indoor temperature), 35°CDB (outdoor temperature).

2 Heating capacity is based on 20°CDB (indoor temperature), 7°CDB/6°CWB (outdoor temperature).

3 The above is the value for connecting with the following indoor units.
- AJ***TNAPKH : Premium Wind Free

4 Capacities are based on the following conditions:
- Corresponding refrigerant piping length : 7.5m / - Level difference : 0m

5 The total ability of connected a indoor unit is up to 17.5kW

6 It is impossible to connect the indoor unit for one room only.

7 This data is reference data for temperature capacity trend.

12. Capacity Table

12-6. AJ125TXJ5KH/EA

HEATING

Combination (Capacity Index)					Combination (Total)	Combination (%)	Outdoor Temperature (°F,DB)	Indoor Temperature (°F, DB)											
								57.2		60.8		64.4		69.98		71.6		75.2	
								TC(kbtu)	PI(kW)	TC(kbtu)	PI(kW)	TC(kbtu)	PI(kW)	TC(kbtu)	PI(kW)	TC(kbtu)	PI(kW)	TC(kbtu)	PI(kW)
2000					2000	14%	-15	1.26	0.91	1.22	0.93	1.18	0.94	1.17	0.95	1.13	0.96	1.11	0.97
							-10	1.51	0.96	1.47	0.98	1.43	0.99	1.41	1.00	1.37	1.01	1.34	1.02
							-5	1.76	1.01	1.71	1.02	1.67	1.04	1.66	1.04	1.61	1.06	1.58	1.07
							0	2.01	1.06	1.96	1.07	1.92	1.09	1.90	1.09	1.85	1.11	1.82	1.12
							2	2.11	1.08	2.06	1.09	2.02	1.11	2.00	1.11	1.95	1.13	1.92	1.14
							7	2.31	1.11	2.26	1.13	2.21	1.14	2.20	1.15	2.14	1.17	2.11	1.18
							10	2.51	1.15	2.46	1.17	2.41	1.18	2.39	1.19	2.33	1.21	2.30	1.22
							15	2.76	1.20	2.71	1.21	2.66	1.23	2.64	1.24	2.57	1.26	2.54	1.27
2500					2500	18%	-15	1.83	1.12	1.77	1.14	1.72	1.15	1.70	1.16	1.64	1.18	1.61	1.19
							-10	2.19	1.18	2.13	1.20	2.08	1.21	2.05	1.22	1.99	1.24	1.95	1.25
							-5	2.56	1.24	2.49	1.26	2.44	1.27	2.41	1.28	2.34	1.30	2.30	1.31
							0	2.92	1.30	2.85	1.31	2.79	1.33	2.76	1.34	2.69	1.36	2.65	1.37
							2	3.07	1.32	3.00	1.34	2.94	1.36	2.91	1.36	2.83	1.39	2.79	1.40
							7	3.36	1.36	3.29	1.38	3.22	1.40	3.20	1.41	3.11	1.44	3.07	1.45
							10	3.65	1.41	3.58	1.43	3.51	1.45	3.48	1.46	3.39	1.48	3.34	1.50
							15	4.02	1.47	3.94	1.49	3.87	1.51	3.83	1.52	3.74	1.54	3.69	1.56
3500					3500	25%	-15	2.29	1.32	2.22	1.34	2.15	1.36	2.13	1.36	2.05	1.39	2.01	1.40
							-10	2.74	1.39	2.67	1.41	2.60	1.43	2.57	1.44	2.49	1.46	2.44	1.47
							-5	3.20	1.46	3.12	1.48	3.04	1.50	3.01	1.51	2.92	1.53	2.88	1.54
							0	3.65	1.53	3.57	1.55	3.49	1.57	3.46	1.58	3.36	1.60	3.31	1.62
							2	3.83	1.55	3.75	1.58	3.67	1.60	3.63	1.61	3.54	1.63	3.48	1.65
							7	4.20	1.61	4.11	1.63	4.03	1.65	4.00	1.66	3.89	1.69	3.83	1.71
							10	4.56	1.66	4.47	1.68	4.38	1.71	4.35	1.72	4.24	1.75	4.18	1.76
							15	5.02	1.73	4.92	1.75	4.83	1.78	4.79	1.79	4.68	1.82	4.62	1.84
5000					5000	36%	-15	3.43	1.73	3.33	1.76	3.23	1.78	3.19	1.79	3.08	1.82	3.02	1.83
							-10	4.11	1.82	4.00	1.85	3.90	1.88	3.85	1.89	3.73	1.92	3.67	1.93
							-5	4.80	1.91	4.67	1.94	4.57	1.97	4.52	1.98	4.39	2.01	4.31	2.03
							0	5.48	2.00	5.35	2.03	5.24	2.06	5.18	2.07	5.04	2.11	4.97	2.12
							2	5.75	2.04	5.62	2.07	5.50	2.10	5.45	2.11	5.31	2.14	5.23	2.16
							7	6.30	2.11	6.16	2.14	6.04	2.17	6.00	2.18	5.83	2.22	5.75	2.24
							10	6.84	2.18	6.70	2.21	6.58	2.24	6.52	2.26	6.36	2.29	6.27	2.32
							15	7.53	2.27	7.38	2.30	7.25	2.33	7.19	2.35	7.02	2.39	6.92	2.41
6800					6800	49%	-15	4.58	2.54	4.44	2.58	4.31	2.62	4.25	2.63	4.10	2.67	4.02	2.69
							-10	5.49	2.68	5.33	2.72	5.20	2.75	5.14	2.77	4.97	2.81	4.89	2.84
							-5	6.39	2.81	6.23	2.85	6.09	2.89	6.02	2.91	5.85	2.95	5.75	2.98
							0	7.30	2.94	7.13	2.98	6.98	3.02	6.91	3.04	6.72	3.09	6.62	3.12
							2	7.67	2.99	7.49	3.04	7.34	3.08	7.27	3.10	7.07	3.15	6.97	3.18
							7	8.40	3.10	8.22	3.14	8.05	3.19	8.00	3.20	7.78	3.26	7.66	3.29
							10	9.12	3.20	8.94	3.25	8.77	3.29	8.69	3.31	8.48	3.37	8.36	3.40
							15	10.04	3.33	9.84	3.38	9.67	3.42	9.58	3.45	9.36	3.50	9.23	3.54
2000	2000				4000	29%	-15	2.52	1.11	2.44	1.13	2.37	1.14	2.34	1.15	2.26	1.17	2.21	1.18
							-10	3.02	1.17	2.93	1.19	2.86	1.20	2.82	1.21	2.74	1.23	2.69	1.24
							-5	3.52	1.23	3.43	1.25	3.35	1.26	3.31	1.27	3.22	1.29	3.16	1.30
							0	4.02	1.29	3.92	1.31	3.84	1.32	3.80	1.33	3.70	1.35	3.64	1.36
							2	4.22	1.31	4.12	1.33	4.04	1.35	4.00	1.35	3.89	1.38	3.83	1.39
							7	4.62	1.35	4.52	1.37	4.43	1.39	4.40	1.40	4.28	1.43	4.21	1.44
							10	5.02	1.40	4.92	1.42	4.82	1.44	4.78	1.45	4.66	1.47	4.60	1.49
							15	5.52	1.46	5.41	1.48	5.32	1.50	5.27	1.51	5.15	1.53	5.08	1.55

12. Capacity Table

12-6. AJ125TXJ5KH/EA

HEATING

Combination (Capacity Index)					Combination (Total)	Combination (%)	Outdoor Temperature (°F,DB)	Indoor Temperature (°F, DB)											
								57.2		60.8		64.4		69.98		71.6		75.2	
								TC(kbtu)	PI(kW)	TC(kbtu)	PI(kW)	TC(kbtu)	PI(kW)	TC(kbtu)	PI(kW)	TC(kbtu)	PI(kW)	TC(kbtu)	PI(kW)
2000	2500				4500	32%	-15	3.09	1.34	2.99	1.36	2.90	1.38	2.86	1.39	2.76	1.41	2.71	1.42
							-10	3.70	1.41	3.59	1.43	3.50	1.45	3.46	1.46	3.35	1.49	3.29	1.50
							-5	4.31	1.48	4.20	1.51	4.10	1.53	4.06	1.53	3.94	1.56	3.88	1.57
							0	4.92	1.55	4.81	1.58	4.70	1.60	4.66	1.61	4.53	1.63	4.46	1.65
							2	5.17	1.58	5.05	1.60	4.94	1.63	4.90	1.64	4.77	1.66	4.69	1.68
							7	5.66	1.64	5.54	1.66	5.43	1.68	5.39	1.69	5.24	1.72	5.16	1.74
							10	6.15	1.69	6.02	1.72	5.91	1.74	5.86	1.75	5.71	1.78	5.63	1.80
							15	6.76	1.76	6.63	1.78	6.51	1.81	6.46	1.82	6.31	1.85	6.22	1.87
2000	3500				5500	39%	-15	3.61	1.47	3.49	1.49	3.39	1.51	3.35	1.52	3.23	1.54	3.17	1.56
							-10	4.32	1.55	4.20	1.57	4.09	1.59	4.04	1.60	3.92	1.63	3.85	1.64
							-5	5.03	1.62	4.91	1.65	4.79	1.67	4.74	1.68	4.61	1.71	4.53	1.72
							0	5.75	1.70	5.62	1.73	5.50	1.75	5.44	1.76	5.30	1.79	5.21	1.80
							2	6.04	1.73	5.90	1.76	5.78	1.78	5.72	1.79	5.57	1.82	5.49	1.84
							7	6.61	1.79	6.47	1.82	6.34	1.84	6.30	1.85	6.12	1.88	6.03	1.90
							10	7.19	1.85	7.04	1.88	6.91	1.90	6.84	1.91	6.68	1.95	6.58	1.97
							15	7.91	1.92	7.75	1.95	7.61	1.98	7.55	1.99	7.37	2.03	7.27	2.05
2000	5000				7000	50%	-15	4.61	2.03	4.47	2.06	4.34	2.08	4.28	2.10	4.13	2.13	4.05	2.15
							-10	5.53	2.13	5.37	2.17	5.24	2.19	5.17	2.21	5.01	2.24	4.92	2.26
							-5	6.44	2.24	6.28	2.27	6.13	2.30	6.07	2.32	5.89	2.35	5.80	2.37
							0	7.36	2.34	7.19	2.38	7.03	2.41	6.96	2.42	6.77	2.46	6.67	2.49
							2	7.72	2.38	7.55	2.42	7.39	2.45	7.32	2.47	7.13	2.51	7.02	2.53
							7	8.46	2.47	8.28	2.50	8.11	2.54	8.06	2.55	7.84	2.60	7.72	2.62
							10	9.19	2.55	9.01	2.59	8.84	2.62	8.76	2.64	8.54	2.68	8.42	2.71
							15	10.11	2.65	9.92	2.69	9.74	2.73	9.66	2.75	9.43	2.79	9.30	2.82
2000	6800				8800	63%	-15	5.54	2.42	5.36	2.46	5.21	2.49	5.14	2.51	4.96	2.55	4.86	2.57
							-10	6.63	2.55	6.45	2.59	6.28	2.62	6.21	2.64	6.01	2.68	5.91	2.70
							-5	7.73	2.68	7.53	2.72	7.36	2.75	7.28	2.77	7.07	2.81	6.95	2.84
							0	8.83	2.80	8.62	2.84	8.44	2.88	8.35	2.90	8.13	2.95	8.00	2.97
							2	9.27	2.85	9.06	2.89	8.87	2.93	8.78	2.95	8.55	3.00	8.42	3.03
							7	10.15	2.95	9.93	3.00	9.73	3.04	9.67	3.05	9.40	3.10	9.26	3.13
							10	11.03	3.05	10.81	3.10	10.60	3.14	10.51	3.16	10.25	3.21	10.10	3.24
							15	12.13	3.17	11.90	3.22	11.68	3.26	11.58	3.28	11.31	3.34	11.16	3.37
2500	2500				5000	36%	-15	3.66	1.50	3.54	1.52	3.44	1.54	3.40	1.55	3.28	1.58	3.21	1.59
							-10	4.38	1.58	4.26	1.60	4.15	1.63	4.10	1.64	3.97	1.66	3.90	1.67
							-5	5.11	1.66	4.98	1.68	4.86	1.71	4.81	1.72	4.67	1.74	4.60	1.76
							0	5.83	1.74	5.70	1.76	5.58	1.79	5.52	1.80	5.37	1.83	5.29	1.84
							2	6.12	1.77	5.99	1.79	5.86	1.82	5.80	1.83	5.65	1.86	5.57	1.88
							7	6.71	1.83	6.56	1.86	6.43	1.88	6.39	1.89	6.21	1.92	6.12	1.94
							10	7.29	1.89	7.14	1.92	7.01	1.94	6.94	1.96	6.77	1.99	6.68	2.01
							15	8.02	1.97	7.86	2.00	7.72	2.02	7.66	2.03	7.48	2.07	7.37	2.09
2500	3500				6000	43%	-15	4.18	1.64	4.05	1.66	3.93	1.68	3.88	1.69	3.74	1.72	3.67	1.73
							-10	5.01	1.72	4.87	1.75	4.74	1.77	4.69	1.78	4.54	1.81	4.46	1.83
							-5	5.83	1.81	5.69	1.84	5.56	1.86	5.50	1.87	5.34	1.90	5.25	1.92
							0	6.66	1.89	6.51	1.92	6.37	1.95	6.31	1.96	6.14	1.99	6.04	2.01
							2	7.00	1.93	6.84	1.96	6.70	1.98	6.63	1.99	6.46	2.03	6.36	2.04
							7	7.66	1.99	7.50	2.02	7.35	2.05	7.30	2.06	7.10	2.10	6.99	2.12
							10	8.33	2.06	8.16	2.09	8.00	2.12	7.93	2.13	7.74	2.17	7.63	2.19
							15	9.16	2.14	8.98	2.17	8.82	2.20	8.75	2.22	8.54	2.26	8.42	2.28

12. Capacity Table

12-6. AJ125TXJ5KH/EA

HEATING

Combination (Capacity Index)					Combination (Total)	Combination (%)	Outdoor Temperature (°F,DB)	Indoor Temperature (°F, DB)											
								57.2		60.8		64.4		69.98		71.6		75.2	
								TC(kbtu)	PI(kW)	TC(kbtu)	PI(kW)	TC(kbtu)	PI(kW)	TC(kbtu)	PI(kW)	TC(kbtu)	PI(kW)	TC(kbtu)	PI(kW)
2500	5000				7500	54%	-15	5.19	2.19	5.02	2.23	4.88	2.26	4.81	2.27	4.65	2.30	4.56	2.32
							-10	6.21	2.31	6.04	2.34	5.89	2.37	5.82	2.39	5.63	2.43	5.54	2.45
							-5	7.24	2.42	7.06	2.46	6.90	2.49	6.82	2.51	6.62	2.55	6.52	2.57
							0	8.27	2.54	8.08	2.57	7.91	2.61	7.83	2.62	7.62	2.67	7.50	2.69
							2	8.68	2.58	8.49	2.62	8.31	2.65	8.23	2.67	8.01	2.71	7.89	2.74
							7	9.51	2.67	9.30	2.71	9.12	2.75	9.06	2.76	8.81	2.81	8.68	2.84
							10	10.33	2.76	10.12	2.80	9.93	2.84	9.84	2.86	9.60	2.90	9.47	2.93
							15	11.37	2.87	11.15	2.91	10.95	2.95	10.85	2.97	10.60	3.02	10.45	3.05
2500	6800				9300	66%	-15	6.11	2.59	5.92	2.63	5.75	2.66	5.67	2.68	5.47	2.72	5.37	2.74
							-10	7.32	2.73	7.11	2.77	6.93	2.80	6.85	2.82	6.64	2.86	6.52	2.89
							-5	8.53	2.86	8.31	2.90	8.12	2.94	8.03	2.96	7.80	3.01	7.67	3.03
							0	9.74	3.00	9.51	3.04	9.31	3.08	9.22	3.10	8.97	3.15	8.83	3.18
							2	10.23	3.05	10.00	3.09	9.79	3.14	9.69	3.15	9.44	3.21	9.29	3.24
							7	11.20	3.15	10.96	3.20	10.74	3.24	10.67	3.26	10.37	3.32	10.22	3.35
							10	12.17	3.26	11.92	3.31	11.70	3.35	11.59	3.37	11.31	3.43	11.15	3.46
							15	13.39	3.39	13.13	3.44	12.89	3.49	12.78	3.51	12.48	3.57	12.31	3.60
3500	3500				7000	50%	-15	4.70	1.76	4.55	1.79	4.42	1.81	4.36	1.83	4.21	1.85	4.13	1.87
							-10	5.63	1.86	5.47	1.88	5.33	1.91	5.27	1.92	5.11	1.95	5.02	1.97
							-5	6.56	1.95	6.40	1.98	6.25	2.00	6.18	2.02	6.00	2.05	5.90	2.07
							0	7.49	2.04	7.32	2.07	7.16	2.10	7.09	2.11	6.90	2.14	6.79	2.16
							2	7.87	2.08	7.69	2.11	7.53	2.14	7.46	2.15	7.26	2.18	7.15	2.20
							7	8.62	2.15	8.43	2.18	8.27	2.21	8.21	2.22	7.98	2.26	7.86	2.28
							10	9.36	2.22	9.17	2.25	9.00	2.28	8.92	2.30	8.70	2.34	8.58	2.36
							15	10.30	2.31	10.10	2.34	9.92	2.38	9.84	2.39	9.61	2.43	9.47	2.45
3500	5000				8500	61%	-15	5.70	2.38	5.52	2.41	5.36	2.44	5.29	2.46	5.11	2.50	5.01	2.52
							-10	6.83	2.50	6.64	2.54	6.47	2.57	6.39	2.59	6.19	2.63	6.08	2.65
							-5	7.96	2.62	7.76	2.66	7.58	2.70	7.50	2.72	7.28	2.76	7.16	2.78
							0	9.09	2.75	8.88	2.79	8.69	2.83	8.60	2.84	8.37	2.89	8.24	2.91
							2	9.54	2.80	9.33	2.84	9.14	2.88	9.05	2.89	8.81	2.94	8.67	2.97
							7	10.45	2.89	10.23	2.94	10.03	2.98	9.96	2.99	9.68	3.04	9.54	3.07
							10	11.36	2.99	11.13	3.03	10.92	3.08	10.82	3.09	10.56	3.15	10.41	3.18
							15	12.50	3.11	12.26	3.16	12.04	3.20	11.93	3.22	11.65	3.27	11.49	3.31
3500	6800				10300	74%	-15	6.63	2.73	6.42	2.77	6.24	2.80	6.15	2.82	5.94	2.86	5.82	2.89
							-10	7.94	2.87	7.72	2.91	7.52	2.95	7.43	2.97	7.20	3.01	7.07	3.04
							-5	9.25	3.01	9.02	3.06	8.81	3.10	8.72	3.12	8.47	3.16	8.33	3.19
							0	10.57	3.15	10.33	3.20	10.10	3.24	10.00	3.26	9.73	3.31	9.58	3.34
							2	11.10	3.21	10.85	3.26	10.62	3.30	10.52	3.32	10.24	3.37	10.09	3.40
							7	12.15	3.32	11.89	3.37	11.66	3.41	11.58	3.43	11.26	3.49	11.09	3.52
							10	13.21	3.43	12.94	3.48	12.69	3.53	12.58	3.55	12.27	3.61	12.10	3.64
							15	14.53	3.57	14.25	3.62	13.99	3.67	13.87	3.69	13.55	3.76	13.36	3.79
5000	5000				10000	71%	-15	6.71	2.73	6.50	2.78	6.31	2.81	6.23	2.83	6.01	2.87	5.89	2.89
							-10	8.04	2.88	7.81	2.92	7.61	2.96	7.52	2.98	7.29	3.02	7.16	3.05
							-5	9.37	3.02	9.13	3.06	8.92	3.11	8.82	3.12	8.57	3.17	8.43	3.20
							0	10.70	3.16	10.45	3.21	10.23	3.25	10.12	3.27	9.85	3.32	9.70	3.35
							2	11.23	3.22	10.98	3.27	10.75	3.31	10.65	3.33	10.36	3.38	10.21	3.41
							7	12.30	3.33	12.04	3.38	11.80	3.42	11.72	3.44	11.39	3.50	11.23	3.53
							10	13.37	3.44	13.10	3.49	12.85	3.54	12.73	3.56	12.42	3.62	12.25	3.65
							15	14.71	3.58	14.42	3.63	14.16	3.68	14.04	3.70	13.71	3.77	13.52	3.80

12. Capacity Table

12-6. AJ125TXJ5KH/EA

HEATING

Combination (Capacity Index)					Combination (Total)	Combination (%)	Outdoor Temperature (°F,DB)	Indoor Temperature (°F, DB)											
								57.2		60.8		64.4		69.98		71.6		75.2	
								TC(kbtu)	PI(kW)	TC(kbtu)	PI(kW)	TC(kbtu)	PI(kW)	TC(kbtu)	PI(kW)	TC(kbtu)	PI(kW)	TC(kbtu)	PI(kW)
5000	6800				11800	84%	-15	6.86	2.69	6.65	2.73	6.46	2.76	6.37	2.78	6.15	2.82	6.03	2.84
							-10	8.22	2.83	7.99	2.87	7.79	2.91	7.70	2.92	7.46	2.97	7.33	2.99
							-5	9.58	2.97	9.34	3.01	9.13	3.05	9.03	3.07	8.77	3.12	8.62	3.15
							0	10.94	3.11	10.69	3.15	10.46	3.19	10.36	3.21	10.08	3.27	9.92	3.29
							2	11.49	3.16	11.23	3.21	11.00	3.25	10.89	3.27	10.60	3.32	10.44	3.35
							7	12.58	3.27	12.31	3.32	12.07	3.36	11.99	3.38	11.66	3.44	11.48	3.47
							10	13.68	3.38	13.40	3.43	13.14	3.48	13.03	3.50	12.71	3.56	12.53	3.59
							15	15.05	3.52	14.75	3.57	14.49	3.62	14.36	3.64	14.03	3.70	13.83	3.74
6800	6800				13600	97%	-15	7.44	2.71	7.21	2.75	7.00	2.79	6.91	2.80	6.67	2.85	6.54	2.87
							-10	8.91	2.85	8.67	2.90	8.45	2.93	8.35	2.95	8.08	3.00	7.94	3.02
							-5	10.39	2.99	10.13	3.04	9.89	3.08	9.79	3.10	9.50	3.15	9.35	3.17
							0	11.87	3.13	11.59	3.18	11.34	3.22	11.23	3.24	10.93	3.29	10.76	3.32
							2	12.46	3.19	12.18	3.24	11.92	3.28	11.81	3.30	11.50	3.35	11.32	3.38
							7	13.64	3.30	13.35	3.35	13.09	3.39	13.00	3.41	12.64	3.47	12.45	3.50
							10	14.83	3.41	14.53	3.46	14.25	3.51	14.12	3.53	13.78	3.59	13.58	3.62
							15	16.31	3.55	16.00	3.60	15.71	3.65	15.57	3.67	15.21	3.73	15.00	3.77
2000	2000	2000			6000	43%	-15	3.69	1.61	3.58	1.64	3.47	1.66	3.43	1.67	3.31	1.69	3.24	1.71
							-10	4.42	1.70	4.30	1.72	4.19	1.75	4.14	1.76	4.01	1.78	3.94	1.80
							-5	5.15	1.78	5.03	1.81	4.91	1.83	4.86	1.84	4.72	1.87	4.64	1.89
							0	5.89	1.87	5.75	1.89	5.63	1.92	5.57	1.93	5.42	1.96	5.34	1.98
							2	6.18	1.90	6.04	1.93	5.92	1.95	5.86	1.96	5.70	2.00	5.62	2.01
							7	6.77	1.96	6.62	1.99	6.49	2.02	6.45	2.03	6.27	2.07	6.18	2.09
							10	7.36	2.03	7.21	2.06	7.07	2.09	7.01	2.10	6.84	2.14	6.74	2.16
							15	8.09	2.11	7.94	2.14	7.79	2.17	7.73	2.19	7.55	2.22	7.44	2.24
2000	2000	2500			6500	46%	-15	4.13	1.78	4.00	1.81	3.88	1.83	3.83	1.84	3.70	1.87	3.63	1.88
							-10	4.94	1.87	4.81	1.90	4.68	1.93	4.63	1.94	4.48	1.97	4.40	1.98
							-5	5.76	1.97	5.62	2.00	5.49	2.02	5.43	2.03	5.27	2.07	5.19	2.08
							0	6.58	2.06	6.43	2.09	6.29	2.12	6.23	2.13	6.06	2.16	5.97	2.18
							2	6.91	2.09	6.75	2.13	6.61	2.15	6.55	2.17	6.38	2.20	6.28	2.22
							7	7.57	2.17	7.40	2.20	7.26	2.23	7.21	2.24	7.01	2.28	6.91	2.30
							10	8.22	2.24	8.06	2.27	7.90	2.30	7.83	2.32	7.64	2.36	7.53	2.38
							15	9.05	2.33	8.87	2.36	8.71	2.40	8.64	2.41	8.44	2.45	8.32	2.48
2000	2000	3500			7500	54%	-15	4.90	2.07	4.75	2.10	4.61	2.12	4.55	2.14	4.39	2.17	4.30	2.19
							-10	5.87	2.18	5.71	2.21	5.56	2.24	5.50	2.25	5.32	2.28	5.23	2.30
							-5	6.84	2.28	6.67	2.32	6.51	2.35	6.44	2.36	6.26	2.40	6.16	2.42
							0	7.81	2.39	7.63	2.42	7.47	2.46	7.39	2.47	7.19	2.51	7.08	2.53
							2	8.20	2.43	8.02	2.47	7.85	2.50	7.77	2.52	7.57	2.56	7.46	2.58
							7	8.98	2.52	8.79	2.55	8.62	2.59	8.56	2.60	8.32	2.65	8.20	2.67
							10	9.76	2.60	9.57	2.64	9.38	2.67	9.30	2.69	9.07	2.74	8.94	2.76
							15	10.74	2.70	10.53	2.74	10.34	2.78	10.25	2.80	10.02	2.85	9.88	2.87
2000	2000	5000			9000	64%	-15	5.79	2.47	5.61	2.51	5.45	2.54	5.37	2.56	5.18	2.60	5.08	2.62
							-10	6.93	2.60	6.74	2.64	6.57	2.68	6.49	2.69	6.29	2.73	6.18	2.76
							-5	8.08	2.73	7.88	2.77	7.69	2.81	7.61	2.82	7.39	2.87	7.27	2.89
							0	9.23	2.86	9.01	2.90	8.82	2.94	8.73	2.96	8.50	3.00	8.37	3.03
							2	9.69	2.91	9.47	2.95	9.27	2.99	9.18	3.01	8.94	3.06	8.81	3.09
							7	10.61	3.01	10.38	3.05	10.18	3.10	10.11	3.11	9.83	3.17	9.68	3.20
							10	11.53	3.11	11.30	3.16	11.08	3.20	10.98	3.22	10.72	3.27	10.56	3.30
							15	12.69	3.23	12.44	3.28	12.22	3.33	12.11	3.35	11.83	3.41	11.67	3.44

12. Capacity Table

12-6. AJ125TXJ5KH/EA

HEATING

Combination (Capacity Index)					Combination (Total)	Combination (%)	Outdoor Temperature (°F,DB)	Indoor Temperature (°F, DB)											
								57.2		60.8		64.4		69.98		71.6		75.2	
								TC(kbtu)	PI(kW)	TC(kbtu)	PI(kW)	TC(kbtu)	PI(kW)	TC(kbtu)	PI(kW)	TC(kbtu)	PI(kW)	TC(kbtu)	PI(kW)
2000	2000	6800			10800	77%	-15	6.39	2.71	6.19	2.75	6.02	2.79	5.94	2.80	5.73	2.85	5.62	2.87
							-10	7.66	2.85	7.45	2.90	7.26	2.93	7.17	2.95	6.95	3.00	6.82	3.02
							-5	8.93	2.99	8.70	3.04	8.50	3.08	8.41	3.10	8.17	3.15	8.03	3.17
							0	10.20	3.13	9.96	3.18	9.75	3.22	9.65	3.24	9.39	3.29	9.24	3.32
							2	10.70	3.19	10.46	3.24	10.25	3.28	10.15	3.30	9.88	3.35	9.73	3.38
							7	11.72	3.30	11.47	3.35	11.24	3.39	11.17	3.41	10.86	3.47	10.70	3.50
							10	12.74	3.41	12.48	3.46	12.25	3.51	12.14	3.53	11.84	3.59	11.67	3.62
							15	14.02	3.55	13.75	3.60	13.50	3.65	13.38	3.67	13.07	3.73	12.89	3.77
2000	2500	2500			7000	50%	-15	4.98	2.11	4.82	2.14	4.69	2.17	4.62	2.18	4.46	2.21	4.38	2.23
							-10	5.97	2.22	5.80	2.25	5.65	2.28	5.59	2.29	5.41	2.33	5.32	2.35
							-5	6.95	2.33	6.78	2.36	6.62	2.39	6.55	2.41	6.36	2.44	6.26	2.47
							0	7.94	2.44	7.76	2.47	7.59	2.50	7.52	2.52	7.31	2.56	7.20	2.58
							2	8.34	2.48	8.15	2.52	7.98	2.55	7.90	2.56	7.69	2.61	7.58	2.63
							7	9.13	2.56	8.94	2.60	8.76	2.64	8.70	2.65	8.46	2.70	8.33	2.72
							10	9.92	2.65	9.72	2.69	9.54	2.73	9.45	2.74	9.22	2.79	9.09	2.81
							15	10.92	2.76	10.71	2.80	10.51	2.84	10.42	2.85	10.18	2.90	10.04	2.93
2000	2500	3500			8000	57%	-15	5.34	2.23	5.17	2.27	5.02	2.30	4.95	2.31	4.78	2.35	4.69	2.36
							-10	6.39	2.35	6.21	2.39	6.06	2.42	5.98	2.43	5.80	2.47	5.69	2.49
							-5	7.45	2.47	7.26	2.50	7.09	2.54	7.02	2.55	6.81	2.59	6.70	2.61
							0	8.51	2.58	8.31	2.62	8.13	2.66	8.05	2.67	7.83	2.71	7.71	2.74
							2	8.93	2.63	8.73	2.67	8.55	2.70	8.47	2.72	8.24	2.76	8.12	2.79
							7	9.78	2.72	9.57	2.76	9.38	2.80	9.32	2.81	9.06	2.86	8.93	2.89
							10	10.63	2.81	10.41	2.85	10.22	2.89	10.13	2.91	9.88	2.96	9.74	2.98
							15	11.69	2.92	11.47	2.97	11.26	3.01	11.17	3.03	10.90	3.08	10.75	3.11
2000	2500	5000			9500	68%	-15	6.22	2.64	6.03	2.68	5.85	2.71	5.78	2.73	5.57	2.77	5.47	2.79
							-10	7.45	2.78	7.25	2.82	7.06	2.86	6.98	2.87	6.76	2.92	6.64	2.94
							-5	8.69	2.91	8.47	2.96	8.27	3.00	8.18	3.02	7.95	3.06	7.82	3.09
							0	9.92	3.05	9.69	3.10	9.49	3.14	9.39	3.16	9.14	3.21	9.00	3.24
							2	10.42	3.10	10.18	3.15	9.97	3.19	9.87	3.21	9.61	3.27	9.47	3.29
							7	11.41	3.21	11.16	3.26	10.94	3.30	10.87	3.32	10.57	3.38	10.41	3.41
							10	12.40	3.32	12.15	3.37	11.92	3.41	11.81	3.44	11.52	3.49	11.36	3.53
							15	13.64	3.45	13.38	3.50	13.13	3.55	13.02	3.57	12.72	3.64	12.54	3.67
2000	2500	6800			11300	81%	-15	6.78	2.66	6.57	2.69	6.38	2.73	6.29	2.75	6.07	2.79	5.95	2.81
							-10	8.12	2.79	7.89	2.84	7.69	2.87	7.60	2.89	7.36	2.93	7.23	2.96
							-5	9.46	2.93	9.22	2.98	9.01	3.02	8.91	3.03	8.66	3.08	8.51	3.11
							0	10.81	3.07	10.56	3.11	10.33	3.16	10.23	3.18	9.95	3.23	9.80	3.26
							2	11.35	3.12	11.09	3.17	10.86	3.21	10.75	3.23	10.47	3.28	10.31	3.31
							7	12.42	3.23	12.16	3.28	11.92	3.32	11.84	3.34	11.51	3.40	11.34	3.43
							10	13.50	3.34	13.23	3.39	12.98	3.44	12.86	3.46	12.55	3.51	12.37	3.55
							15	14.86	3.47	14.57	3.53	14.31	3.57	14.18	3.60	13.85	3.66	13.66	3.69
2000	3500	3500			9000	64%	-15	5.69	2.42	5.51	2.46	5.35	2.49	5.28	2.51	5.10	2.55	5.00	2.57
							-10	6.82	2.55	6.63	2.59	6.46	2.62	6.38	2.64	6.18	2.68	6.07	2.70
							-5	7.94	2.68	7.74	2.72	7.57	2.75	7.48	2.77	7.27	2.81	7.15	2.84
							0	9.07	2.80	8.86	2.84	8.67	2.88	8.59	2.90	8.35	2.95	8.23	2.97
							2	9.53	2.85	9.31	2.89	9.12	2.93	9.03	2.95	8.79	3.00	8.66	3.03
							7	10.43	2.95	10.21	3.00	10.01	3.04	9.94	3.05	9.66	3.10	9.52	3.13
							10	11.34	3.05	11.11	3.10	10.90	3.14	10.80	3.16	10.54	3.21	10.39	3.24
							15	12.47	3.17	12.23	3.22	12.01	3.26	11.91	3.28	11.63	3.34	11.47	3.37

12. Capacity Table

12-6. AJ125TXJ5KH/EA

HEATING

Combination (Capacity Index)					Combination (Total)	Combination (%)	Outdoor Temperature (°F,DB)	Indoor Temperature (°F, DB)											
								57.2		60.8		64.4		69.98		71.6		75.2	
								TC(kbtu)	PI(kW)	TC(kbtu)	PI(kW)	TC(kbtu)	PI(kW)	TC(kbtu)	PI(kW)	TC(kbtu)	PI(kW)	TC(kbtu)	PI(kW)
2000	3500	5000			10500	75%	-15	6.88	2.68	6.67	2.72	6.47	2.75	6.39	2.77	6.16	2.81	6.05	2.84
							-10	8.24	2.82	8.01	2.86	7.81	2.90	7.72	2.92	7.47	2.96	7.34	2.99
							-5	9.61	2.96	9.36	3.00	9.15	3.04	9.05	3.06	8.79	3.11	8.64	3.14
							0	10.97	3.10	10.72	3.14	10.49	3.18	10.38	3.20	10.10	3.26	9.95	3.28
							2	11.52	3.15	11.26	3.20	11.03	3.24	10.92	3.26	10.63	3.31	10.47	3.34
							7	12.61	3.26	12.34	3.31	12.10	3.35	12.02	3.37	11.68	3.43	11.51	3.46
							10	13.71	3.37	13.43	3.42	13.18	3.47	13.06	3.49	12.74	3.55	12.56	3.58
							15	15.08	3.50	14.79	3.56	14.52	3.61	14.40	3.63	14.06	3.69	13.87	3.73
2000	3500	6800			12300	88%	-15	6.85	2.68	6.63	2.72	6.44	2.75	6.36	2.77	6.13	2.81	6.01	2.84
							-10	8.20	2.82	7.97	2.86	7.77	2.90	7.68	2.92	7.44	2.96	7.31	2.99
							-5	9.56	2.96	9.32	3.00	9.10	3.04	9.00	3.06	8.74	3.11	8.60	3.14
							0	10.92	3.10	10.66	3.14	10.44	3.18	10.33	3.20	10.05	3.26	9.90	3.28
							2	11.46	3.15	11.20	3.20	10.97	3.24	10.86	3.26	10.58	3.31	10.42	3.34
							7	12.55	3.26	12.28	3.31	12.04	3.35	11.96	3.37	11.63	3.43	11.46	3.46
							10	13.64	3.37	13.36	3.42	13.11	3.47	12.99	3.49	12.68	3.55	12.50	3.58
							15	15.01	3.50	14.72	3.56	14.45	3.61	14.33	3.63	13.99	3.69	13.80	3.73
2000	5000	5000			12000	86%	-15	6.81	2.67	6.60	2.71	6.41	2.75	6.32	2.76	6.10	2.80	5.98	2.83
							-10	8.16	2.81	7.93	2.85	7.73	2.89	7.64	2.91	7.40	2.95	7.27	2.98
							-5	9.51	2.95	9.27	2.99	9.06	3.03	8.96	3.05	8.70	3.10	8.56	3.13
							0	10.86	3.09	10.61	3.13	10.38	3.18	10.28	3.19	10.00	3.25	9.85	3.28
							2	11.40	3.14	11.15	3.19	10.92	3.23	10.81	3.25	10.52	3.30	10.36	3.33
							7	12.49	3.25	12.22	3.30	11.98	3.34	11.90	3.36	11.57	3.42	11.40	3.45
							10	13.57	3.36	13.30	3.41	13.05	3.46	12.93	3.48	12.61	3.54	12.43	3.57
							15	14.93	3.49	14.64	3.55	14.38	3.60	14.26	3.62	13.92	3.68	13.73	3.71
2000	5000	6800			13800	99%	-15	7.44	2.71	7.21	2.75	7.00	2.79	6.91	2.80	6.67	2.85	6.54	2.87
							-10	8.91	2.85	8.67	2.90	8.45	2.93	8.35	2.95	8.08	3.00	7.94	3.02
							-5	10.39	2.99	10.13	3.04	9.89	3.08	9.79	3.10	9.50	3.15	9.35	3.17
							0	11.87	3.13	11.59	3.18	11.34	3.22	11.23	3.24	10.93	3.29	10.76	3.32
							2	12.46	3.19	12.18	3.24	11.92	3.28	11.81	3.30	11.50	3.35	11.32	3.38
							7	13.64	3.30	13.35	3.35	13.09	3.39	13.00	3.41	12.64	3.47	12.45	3.50
							10	14.83	3.41	14.53	3.46	14.25	3.51	14.12	3.53	13.78	3.59	13.58	3.62
							15	16.31	3.55	16.00	3.60	15.71	3.65	15.57	3.67	15.21	3.73	15.00	3.77
2000	6800	6800			15600	111%	-15	7.44	2.71	7.21	2.75	7.00	2.79	6.91	2.80	6.67	2.85	6.54	2.87
							-10	8.91	2.85	8.67	2.90	8.45	2.93	8.35	2.95	8.08	3.00	7.94	3.02
							-5	10.39	2.99	10.13	3.04	9.89	3.08	9.79	3.10	9.50	3.15	9.35	3.17
							0	11.87	3.13	11.59	3.18	11.34	3.22	11.23	3.24	10.93	3.29	10.76	3.32
							2	12.46	3.19	12.18	3.24	11.92	3.28	11.81	3.30	11.50	3.35	11.32	3.38
							7	13.64	3.30	13.35	3.35	13.09	3.39	13.00	3.41	12.64	3.47	12.45	3.50
							10	14.83	3.41	14.53	3.46	14.25	3.51	14.12	3.53	13.78	3.59	13.58	3.62
							15	16.31	3.55	16.00	3.60	15.71	3.65	15.57	3.67	15.21	3.73	15.00	3.77
2500	2500	2500			7500	54%	-15	5.42	2.27	5.25	2.31	5.10	2.34	5.03	2.35	4.86	2.39	4.76	2.41
							-10	6.49	2.39	6.31	2.43	6.15	2.46	6.08	2.47	5.89	2.51	5.79	2.53
							-5	7.57	2.51	7.38	2.55	7.21	2.58	7.13	2.60	6.92	2.64	6.81	2.66
							0	8.64	2.63	8.44	2.67	8.26	2.70	8.18	2.72	7.96	2.76	7.84	2.79
							2	9.08	2.67	8.87	2.71	8.69	2.75	8.60	2.77	8.37	2.81	8.25	2.84
							7	9.94	2.77	9.73	2.81	9.53	2.85	9.47	2.86	9.21	2.91	9.07	2.94
							10	10.80	2.86	10.58	2.90	10.38	2.94	10.29	2.96	10.04	3.01	9.90	3.04
							15	11.88	2.97	11.65	3.02	11.44	3.06	11.35	3.08	11.08	3.13	10.93	3.16

12. Capacity Table

12-6. AJ125TXJ5KH/EA

HEATING

Combination (Capacity Index)					Combination (Total)	Combination (%)	Outdoor Temperature (°F,DB)	Indoor Temperature (°F, DB)											
								57.2		60.8		64.4		69.98		71.6		75.2	
								TC(kbtu)	PI(kW)	TC(kbtu)	PI(kW)	TC(kbtu)	PI(kW)	TC(kbtu)	PI(kW)	TC(kbtu)	PI(kW)	TC(kbtu)	PI(kW)
2500	2500	3500			8500	61%	-15	5.79	2.46	5.61	2.49	5.45	2.53	5.37	2.54	5.18	2.58	5.08	2.60
							-10	6.93	2.59	6.74	2.62	6.57	2.66	6.49	2.67	6.29	2.72	6.18	2.74
							-5	8.08	2.71	7.88	2.75	7.69	2.79	7.61	2.81	7.39	2.85	7.27	2.88
							0	9.23	2.84	9.01	2.88	8.82	2.92	8.73	2.94	8.50	2.99	8.37	3.01
							2	9.69	2.89	9.47	2.93	9.27	2.97	9.18	2.99	8.94	3.04	8.81	3.07
							7	10.61	2.99	10.38	3.03	10.18	3.08	10.11	3.09	9.83	3.15	9.68	3.17
							10	11.53	3.09	11.30	3.14	11.08	3.18	10.98	3.20	10.72	3.25	10.56	3.28
							15	12.69	3.21	12.44	3.26	12.22	3.31	12.11	3.33	11.83	3.38	11.67	3.42
2500	2500	5000			10000	71%	-15	6.39	2.70	6.19	2.74	6.02	2.78	5.94	2.80	5.73	2.84	5.62	2.86
							-10	7.66	2.84	7.45	2.89	7.26	2.92	7.17	2.94	6.95	2.99	6.82	3.01
							-5	8.93	2.98	8.70	3.03	8.50	3.07	8.41	3.09	8.17	3.14	8.03	3.16
							0	10.20	3.12	9.96	3.17	9.75	3.21	9.65	3.23	9.39	3.28	9.24	3.31
							2	10.70	3.18	10.46	3.23	10.25	3.27	10.15	3.29	9.88	3.34	9.73	3.37
							7	11.72	3.29	11.47	3.34	11.24	3.38	11.17	3.40	10.86	3.46	10.70	3.49
							10	12.74	3.40	12.48	3.45	12.25	3.50	12.14	3.52	11.84	3.58	11.67	3.61
							15	14.02	3.54	13.75	3.59	13.50	3.64	13.38	3.66	13.07	3.72	12.89	3.76
2500	2500	6800			11800	84%	-15	6.86	2.69	6.65	2.73	6.46	2.76	6.37	2.78	6.15	2.82	6.03	2.84
							-10	8.22	2.83	7.99	2.87	7.79	2.91	7.70	2.92	7.46	2.97	7.33	2.99
							-5	9.58	2.97	9.34	3.01	9.13	3.05	9.03	3.07	8.77	3.12	8.62	3.15
							0	10.94	3.11	10.69	3.15	10.46	3.19	10.36	3.21	10.08	3.27	9.92	3.29
							2	11.49	3.16	11.23	3.21	11.00	3.25	10.89	3.27	10.60	3.32	10.44	3.35
							7	12.58	3.27	12.31	3.32	12.07	3.36	11.99	3.38	11.66	3.44	11.48	3.47
							10	13.68	3.38	13.40	3.43	13.14	3.48	13.03	3.50	12.71	3.56	12.53	3.59
							15	15.05	3.52	14.75	3.57	14.49	3.62	14.36	3.64	14.03	3.70	13.83	3.74
2500	3500	3500			9500	68%	-15	6.14	2.59	5.95	2.63	5.78	2.66	5.70	2.68	5.50	2.72	5.40	2.74
							-10	7.36	2.73	7.15	2.77	6.97	2.80	6.89	2.82	6.67	2.86	6.56	2.89
							-5	8.58	2.86	8.36	2.90	8.17	2.94	8.08	2.96	7.84	3.01	7.72	3.03
							0	9.79	3.00	9.57	3.04	9.36	3.08	9.27	3.10	9.02	3.15	8.88	3.18
							2	10.28	3.05	10.05	3.09	9.84	3.14	9.75	3.15	9.49	3.21	9.35	3.24
							7	11.26	3.15	11.02	3.20	10.80	3.24	10.73	3.26	10.43	3.32	10.28	3.35
							10	12.24	3.26	11.99	3.31	11.76	3.35	11.66	3.37	11.37	3.43	11.21	3.46
							15	13.46	3.39	13.20	3.44	12.97	3.49	12.85	3.51	12.55	3.57	12.38	3.60
2500	3500	5000			11000	79%	-15	6.76	2.64	6.55	2.68	6.36	2.71	6.28	2.73	6.06	2.77	5.94	2.79
							-10	8.10	2.78	7.87	2.82	7.67	2.86	7.58	2.87	7.34	2.92	7.22	2.94
							-5	9.44	2.91	9.20	2.96	8.99	3.00	8.89	3.02	8.63	3.06	8.49	3.09
							0	10.78	3.05	10.53	3.10	10.31	3.14	10.20	3.16	9.93	3.21	9.77	3.24
							2	11.32	3.10	11.06	3.15	10.83	3.19	10.73	3.21	10.44	3.27	10.29	3.29
							7	12.39	3.21	12.13	3.26	11.89	3.30	11.81	3.32	11.48	3.38	11.31	3.41
							10	13.47	3.32	13.20	3.37	12.95	3.41	12.83	3.44	12.52	3.49	12.34	3.53
							15	14.82	3.45	14.53	3.50	14.27	3.55	14.15	3.57	13.82	3.64	13.63	3.67
2500	3500	6800			12800	91%	-15	6.94	2.71	6.73	2.75	6.53	2.79	6.45	2.80	6.22	2.85	6.10	2.87
							-10	8.32	2.85	8.09	2.90	7.88	2.93	7.79	2.95	7.54	3.00	7.41	3.02
							-5	9.69	2.99	9.45	3.04	9.23	3.08	9.13	3.10	8.87	3.15	8.72	3.17
							0	11.07	3.13	10.82	3.18	10.58	3.22	10.48	3.24	10.20	3.29	10.04	3.32
							2	11.62	3.19	11.36	3.24	11.13	3.28	11.02	3.30	10.73	3.35	10.56	3.38
							7	12.73	3.30	12.46	3.35	12.21	3.39	12.13	3.41	11.79	3.47	11.62	3.50
							10	13.84	3.41	13.55	3.46	13.30	3.51	13.18	3.53	12.86	3.59	12.67	3.62
							15	15.22	3.55	14.93	3.60	14.66	3.65	14.53	3.67	14.19	3.73	14.00	3.77

12. Capacity Table

12-6. AJ125TXJ5KH/EA

HEATING

Combination (Capacity Index)					Combination (Total)	Combination (%)	Outdoor Temperature (°F,DB)	Indoor Temperature (°F, DB)											
								57.2		60.8		64.4		69.98		71.6		75.2	
								TC(kbtu)	PI(kW)	TC(kbtu)	PI(kW)	TC(kbtu)	PI(kW)	TC(kbtu)	PI(kW)	TC(kbtu)	PI(kW)	TC(kbtu)	PI(kW)
2500	5000	5000			12500	89%	-15	6.94	2.72	6.73	2.76	6.53	2.80	6.45	2.81	6.22	2.85	6.10	2.88
							-10	8.32	2.86	8.09	2.90	7.88	2.94	7.79	2.96	7.54	3.01	7.41	3.03
							-5	9.69	3.00	9.45	3.05	9.23	3.09	9.13	3.11	8.87	3.16	8.72	3.18
							0	11.07	3.14	10.82	3.19	10.58	3.23	10.48	3.25	10.20	3.30	10.04	3.33
							2	11.62	3.20	11.36	3.25	11.13	3.29	11.02	3.31	10.73	3.36	10.56	3.39
							7	12.73	3.31	12.46	3.36	12.21	3.40	12.13	3.42	11.79	3.48	11.62	3.51
							10	13.84	3.42	13.55	3.47	13.30	3.52	13.18	3.54	12.86	3.60	12.67	3.63
							15	15.22	3.56	14.93	3.61	14.66	3.66	14.53	3.68	14.19	3.74	14.00	3.78
2500	5000	6800			14300	102%	-15	7.44	2.71	7.21	2.75	7.00	2.79	6.91	2.80	6.67	2.85	6.54	2.87
							-10	8.91	2.85	8.67	2.90	8.45	2.93	8.35	2.95	8.08	3.00	7.94	3.02
							-5	10.39	2.99	10.13	3.04	9.89	3.08	9.79	3.10	9.50	3.15	9.35	3.17
							0	11.87	3.13	11.59	3.18	11.34	3.22	11.23	3.24	10.93	3.29	10.76	3.32
							2	12.46	3.19	12.18	3.24	11.92	3.28	11.81	3.30	11.50	3.35	11.32	3.38
							7	13.64	3.30	13.35	3.35	13.09	3.39	13.00	3.41	12.64	3.47	12.45	3.50
							10	14.83	3.41	14.53	3.46	14.25	3.51	14.12	3.53	13.78	3.59	13.58	3.62
							15	16.31	3.55	16.00	3.60	15.71	3.65	15.57	3.67	15.21	3.73	15.00	3.77
2500	6800	6800			16100	115%	-15	7.44	2.71	7.21	2.75	7.00	2.79	6.91	2.80	6.67	2.85	6.54	2.87
							-10	8.91	2.85	8.67	2.90	8.45	2.93	8.35	2.95	8.08	3.00	7.94	3.02
							-5	10.39	2.99	10.13	3.04	9.89	3.08	9.79	3.10	9.50	3.15	9.35	3.17
							0	11.87	3.13	11.59	3.18	11.34	3.22	11.23	3.24	10.93	3.29	10.76	3.32
							2	12.46	3.19	12.18	3.24	11.92	3.28	11.81	3.30	11.50	3.35	11.32	3.38
							7	13.64	3.30	13.35	3.35	13.09	3.39	13.00	3.41	12.64	3.47	12.45	3.50
							10	14.83	3.41	14.53	3.46	14.25	3.51	14.12	3.53	13.78	3.59	13.58	3.62
							15	16.31	3.55	16.00	3.60	15.71	3.65	15.57	3.67	15.21	3.73	15.00	3.77
3500	3500	3500			10500	75%	-15	6.49	2.73	6.29	2.77	6.11	2.80	6.03	2.82	5.81	2.86	5.70	2.89
							-10	7.78	2.87	7.56	2.91	7.37	2.95	7.28	2.97	7.05	3.01	6.93	3.04
							-5	9.06	3.01	8.84	3.06	8.63	3.10	8.54	3.12	8.29	3.16	8.16	3.19
							0	10.35	3.15	10.11	3.20	9.90	3.24	9.80	3.26	9.53	3.31	9.38	3.34
							2	10.87	3.21	10.62	3.26	10.40	3.30	10.30	3.32	10.03	3.37	9.88	3.40
							7	11.90	3.32	11.65	3.37	11.42	3.41	11.34	3.43	11.02	3.49	10.86	3.52
							10	12.93	3.43	12.67	3.48	12.43	3.53	12.32	3.55	12.02	3.61	11.85	3.64
							15	14.23	3.57	13.95	3.62	13.70	3.67	13.59	3.69	13.27	3.76	13.08	3.79
3500	3500	5000			12000	86%	-15	6.83	2.66	6.62	2.70	6.43	2.74	6.34	2.75	6.12	2.80	6.00	2.82
							-10	8.18	2.80	7.95	2.84	7.75	2.88	7.66	2.90	7.42	2.94	7.29	2.97
							-5	9.53	2.94	9.29	2.98	9.08	3.02	8.98	3.04	8.72	3.09	8.58	3.12
							0	10.89	3.08	10.64	3.12	10.41	3.17	10.31	3.19	10.03	3.24	9.87	3.27
							2	11.43	3.13	11.18	3.18	10.94	3.22	10.84	3.24	10.55	3.29	10.39	3.32
							7	12.52	3.24	12.25	3.29	12.01	3.33	11.93	3.35	11.60	3.41	11.43	3.44
							10	13.61	3.35	13.33	3.40	13.08	3.45	12.96	3.47	12.65	3.53	12.47	3.56
							15	14.97	3.48	14.68	3.54	14.42	3.58	14.29	3.61	13.96	3.67	13.77	3.70
3500	3500	6800			13800	99%	-15	7.44	2.71	7.21	2.75	7.00	2.79	6.91	2.80	6.67	2.85	6.54	2.87
							-10	8.91	2.85	8.67	2.90	8.45	2.93	8.35	2.95	8.08	3.00	7.94	3.02
							-5	10.39	2.99	10.13	3.04	9.89	3.08	9.79	3.10	9.50	3.15	9.35	3.17
							0	11.87	3.13	11.59	3.18	11.34	3.22	11.23	3.24	10.93	3.29	10.76	3.32
							2	12.46	3.19	12.18	3.24	11.92	3.28	11.81	3.30	11.50	3.35	11.32	3.38
							7	13.64	3.30	13.35	3.35	13.09	3.39	13.00	3.41	12.64	3.47	12.45	3.50
							10	14.83	3.41	14.53	3.46	14.25	3.51	14.12	3.53	13.78	3.59	13.58	3.62
							15	16.31	3.55	16.00	3.60	15.71	3.65	15.57	3.67	15.21	3.73	15.00	3.77

12. Capacity Table

12-6. AJ125TXJ5KH/EA

HEATING

Combination (Capacity Index)					Combination (Total)	Combination (%)	Outdoor Temperature (°F,DB)	Indoor Temperature (°F, DB)											
								57.2		60.8		64.4		69.98		71.6		75.2	
								TC(kbtu)	PI(kW)	TC(kbtu)	PI(kW)	TC(kbtu)	PI(kW)	TC(kbtu)	PI(kW)	TC(kbtu)	PI(kW)	TC(kbtu)	PI(kW)
3500	5000	5000			13500	96%	-15	7.44	2.71	7.21	2.75	7.00	2.79	6.91	2.80	6.67	2.85	6.54	2.87
							-10	8.91	2.85	8.67	2.90	8.45	2.93	8.35	2.95	8.08	3.00	7.94	3.02
							-5	10.39	2.99	10.13	3.04	9.89	3.08	9.79	3.10	9.50	3.15	9.35	3.17
							0	11.87	3.13	11.59	3.18	11.34	3.22	11.23	3.24	10.93	3.29	10.76	3.32
							2	12.46	3.19	12.18	3.24	11.92	3.28	11.81	3.30	11.50	3.35	11.32	3.38
							7	13.64	3.30	13.35	3.35	13.09	3.39	13.00	3.41	12.64	3.47	12.45	3.50
							10	14.83	3.41	14.53	3.46	14.25	3.51	14.12	3.53	13.78	3.59	13.58	3.62
							15	16.31	3.55	16.00	3.60	15.71	3.65	15.57	3.67	15.21	3.73	15.00	3.77
3500	5000	6800			15300	109%	-15	7.44	2.71	7.21	2.75	7.00	2.79	6.91	2.80	6.67	2.85	6.54	2.87
							-10	8.91	2.85	8.67	2.90	8.45	2.93	8.35	2.95	8.08	3.00	7.94	3.02
							-5	10.39	2.99	10.13	3.04	9.89	3.08	9.79	3.10	9.50	3.15	9.35	3.17
							0	11.87	3.13	11.59	3.18	11.34	3.22	11.23	3.24	10.93	3.29	10.76	3.32
							2	12.46	3.19	12.18	3.24	11.92	3.28	11.81	3.30	11.50	3.35	11.32	3.38
							7	13.64	3.30	13.35	3.35	13.09	3.39	13.00	3.41	12.64	3.47	12.45	3.50
							10	14.83	3.41	14.53	3.46	14.25	3.51	14.12	3.53	13.78	3.59	13.58	3.62
							15	16.31	3.55	16.00	3.60	15.71	3.65	15.57	3.67	15.21	3.73	15.00	3.77
3500	6800	6800			17100	122%	-15	7.44	2.71	7.21	2.75	7.00	2.79	6.91	2.80	6.67	2.85	6.54	2.87
							-10	8.91	2.85	8.67	2.90	8.45	2.93	8.35	2.95	8.08	3.00	7.94	3.02
							-5	10.39	2.99	10.13	3.04	9.89	3.08	9.79	3.10	9.50	3.15	9.35	3.17
							0	11.87	3.13	11.59	3.18	11.34	3.22	11.23	3.24	10.93	3.29	10.76	3.32
							2	12.46	3.19	12.18	3.24	11.92	3.28	11.81	3.30	11.50	3.35	11.32	3.38
							7	13.64	3.30	13.35	3.35	13.09	3.39	13.00	3.41	12.64	3.47	12.45	3.50
							10	14.83	3.41	14.53	3.46	14.25	3.51	14.12	3.53	13.78	3.59	13.58	3.62
							15	16.31	3.55	16.00	3.60	15.71	3.65	15.57	3.67	15.21	3.73	15.00	3.77
5000	5000	5000			15000	107%	-15	7.44	2.71	7.21	2.75	7.00	2.79	6.82	2.82	6.67	2.85	6.54	2.87
							-10	8.91	2.85	8.67	2.90	8.45	2.93	8.25	2.97	8.08	3.00	7.94	3.02
							-5	10.39	2.99	10.13	3.04	9.89	3.08	9.69	3.11	9.50	3.15	9.35	3.17
							0	11.87	3.13	11.59	3.18	11.34	3.22	11.12	3.26	10.93	3.29	10.76	3.32
							2	12.46	3.19	12.18	3.24	11.92	3.28	11.70	3.32	11.50	3.35	11.32	3.38
							7	13.94	3.33	13.65	3.38	13.38	3.42	13.00	3.41	12.92	3.50	12.74	3.53
							10	14.83	3.41	14.53	3.46	14.25	3.51	14.00	3.55	13.78	3.59	13.58	3.62
							15	16.31	3.55	16.00	3.60	15.71	3.65	15.45	3.69	15.21	3.73	15.00	3.77
5000	5000	6800			16800	120%	-15	7.44	2.71	7.21	2.75	7.00	2.79	6.82	2.82	6.67	2.85	6.54	2.87
							-10	8.91	2.85	8.67	2.90	8.45	2.93	8.25	2.97	8.08	3.00	7.94	3.02
							-5	10.39	2.99	10.13	3.04	9.89	3.08	9.69	3.11	9.50	3.15	9.35	3.17
							0	11.87	3.13	11.59	3.18	11.34	3.22	11.12	3.26	10.93	3.29	10.76	3.32
							2	12.46	3.19	12.18	3.24	11.92	3.28	11.70	3.32	11.50	3.35	11.32	3.38
							7	13.94	3.33	13.65	3.38	13.38	3.42	13.00	3.41	12.92	3.50	12.74	3.53
							10	14.83	3.41	14.53	3.46	14.25	3.51	14.00	3.55	13.78	3.59	13.58	3.62
							15	16.31	3.55	16.00	3.60	15.71	3.65	15.45	3.69	15.21	3.73	15.00	3.77
2000	2000	2000	2000		8000	57%	-15	5.30	2.09	5.13	2.12	4.99	2.15	4.92	2.16	4.75	2.19	4.66	2.21
							-10	6.35	2.20	6.17	2.23	6.02	2.26	5.94	2.28	5.76	2.31	5.66	2.33
							-5	7.40	2.31	7.21	2.34	7.05	2.37	6.97	2.39	6.77	2.43	6.66	2.45
							0	8.45	2.42	8.26	2.45	8.08	2.49	8.00	2.50	7.78	2.54	7.66	2.56
							2	8.87	2.46	8.67	2.50	8.49	2.53	8.41	2.55	8.19	2.59	8.07	2.61
							7	9.72	2.54	9.51	2.58	9.32	2.62	9.26	2.63	9.00	2.68	8.87	2.70
							10	10.56	2.63	10.35	2.67	10.15	2.71	10.06	2.72	9.82	2.77	9.68	2.79
							15	11.62	2.74	11.39	2.78	11.19	2.81	11.09	2.83	10.83	2.88	10.68	2.91

12. Capacity Table

12-6. AJ125TXJ5KH/EA

HEATING

Combination (Capacity Index)					Combination (Total)	Combination (%)	Outdoor Temperature (°F,DB)	Indoor Temperature (°F, DB)											
								57.2		60.8		64.4		69.98		71.6		75.2	
								TC(kbtu)	PI(kW)	TC(kbtu)	PI(kW)	TC(kbtu)	PI(kW)	TC(kbtu)	PI(kW)	TC(kbtu)	PI(kW)	TC(kbtu)	PI(kW)
2000	2000	2000	2500		8500	61%	-15	5.77	2.31	5.59	2.34	5.43	2.37	5.36	2.38	5.17	2.42	5.07	2.44
							-10	6.91	2.43	6.72	2.46	6.55	2.49	6.47	2.51	6.27	2.55	6.16	2.57
							-5	8.06	2.55	7.85	2.58	7.67	2.62	7.59	2.63	7.37	2.68	7.25	2.70
							0	9.20	2.66	8.99	2.70	8.80	2.74	8.71	2.76	8.47	2.80	8.34	2.83
							2	9.66	2.71	9.44	2.75	9.25	2.79	9.16	2.81	8.91	2.85	8.78	2.88
							7	10.58	2.81	10.35	2.85	10.15	2.89	10.08	2.90	9.80	2.95	9.66	2.98
							10	11.50	2.90	11.26	2.94	11.05	2.98	10.95	3.00	10.68	3.05	10.53	3.08
							15	12.65	3.02	12.40	3.06	12.18	3.10	12.08	3.12	11.79	3.18	11.63	3.21
2000	2000	2000	3500		9500	68%	-15	6.14	2.43	5.95	2.47	5.78	2.50	5.70	2.52	5.50	2.55	5.40	2.57
							-10	7.36	2.56	7.15	2.60	6.97	2.63	6.89	2.65	6.67	2.69	6.56	2.71
							-5	8.58	2.69	8.36	2.73	8.17	2.76	8.08	2.78	7.84	2.82	7.72	2.85
							0	9.79	2.81	9.57	2.85	9.36	2.89	9.27	2.91	9.02	2.96	8.88	2.98
							2	10.28	2.86	10.05	2.90	9.84	2.94	9.75	2.96	9.49	3.01	9.35	3.04
							7	11.26	2.96	11.02	3.01	10.80	3.05	10.73	3.06	10.43	3.11	10.28	3.14
							10	12.24	3.06	11.99	3.11	11.76	3.15	11.66	3.17	11.37	3.22	11.21	3.25
							15	13.46	3.18	13.20	3.23	12.97	3.27	12.85	3.29	12.55	3.35	12.38	3.38
2000	2000	2000	5000		11000	79%	-15	7.05	2.60	6.83	2.64	6.63	2.67	6.54	2.69	6.31	2.73	6.19	2.75
							-10	8.44	2.74	8.21	2.78	8.00	2.81	7.90	2.83	7.65	2.87	7.52	2.90
							-5	9.84	2.87	9.59	2.91	9.37	2.95	9.27	2.97	9.00	3.02	8.85	3.04
							0	11.24	3.00	10.98	3.05	10.74	3.09	10.63	3.11	10.35	3.16	10.19	3.19
							2	11.80	3.06	11.53	3.10	11.29	3.15	11.18	3.16	10.89	3.22	10.72	3.24
							7	12.92	3.16	12.64	3.21	12.39	3.25	12.31	3.27	11.97	3.33	11.79	3.36
							10	14.04	3.27	13.76	3.32	13.49	3.36	13.37	3.38	13.05	3.44	12.86	3.47
							15	15.45	3.40	15.15	3.45	14.87	3.50	14.75	3.52	14.40	3.58	14.20	3.61
2000	2000	2000	6800		12800	91%	-15	7.23	2.67	7.00	2.71	6.80	2.75	6.71	2.76	6.48	2.80	6.35	2.83
							-10	8.66	2.81	8.42	2.85	8.21	2.89	8.11	2.91	7.85	2.95	7.72	2.98
							-5	10.09	2.95	9.84	2.99	9.61	3.03	9.51	3.05	9.23	3.10	9.08	3.13
							0	11.53	3.09	11.26	3.13	11.02	3.18	10.91	3.19	10.62	3.25	10.45	3.28
							2	12.10	3.14	11.83	3.19	11.59	3.23	11.47	3.25	11.17	3.30	11.00	3.33
							7	13.25	3.25	12.97	3.30	12.71	3.34	12.63	3.36	12.28	3.42	12.10	3.45
							10	14.41	3.36	14.11	3.41	13.85	3.46	13.72	3.48	13.39	3.54	13.20	3.57
							15	15.85	3.49	15.54	3.55	15.26	3.60	15.13	3.62	14.78	3.68	14.57	3.71
2000	2000	2500	2500		9000	64%	-15	6.22	2.46	6.03	2.50	5.85	2.53	5.78	2.55	5.57	2.59	5.47	2.61
							-10	7.45	2.59	7.25	2.63	7.06	2.67	6.98	2.68	6.76	2.72	6.64	2.75
							-5	8.69	2.72	8.47	2.76	8.27	2.80	8.18	2.82	7.95	2.86	7.82	2.88
							0	9.92	2.85	9.69	2.89	9.49	2.93	9.39	2.95	9.14	2.99	9.00	3.02
							2	10.42	2.90	10.18	2.94	9.97	2.98	9.87	3.00	9.61	3.05	9.47	3.08
							7	11.41	3.00	11.16	3.04	10.94	3.09	10.87	3.10	10.57	3.16	10.41	3.18
							10	12.40	3.10	12.15	3.15	11.92	3.19	11.81	3.21	11.52	3.26	11.36	3.29
							15	13.64	3.22	13.38	3.27	13.13	3.32	13.02	3.34	12.72	3.39	12.54	3.43
2000	2000	2500	3500		10000	71%	-15	6.61	2.60	6.40	2.64	6.22	2.67	6.14	2.69	5.92	2.73	5.81	2.75
							-10	7.92	2.74	7.70	2.78	7.50	2.81	7.42	2.83	7.18	2.87	7.06	2.90
							-5	9.23	2.87	9.00	2.91	8.79	2.95	8.70	2.97	8.44	3.02	8.31	3.04
							0	10.54	3.00	10.30	3.05	10.08	3.09	9.98	3.11	9.71	3.16	9.56	3.19
							2	11.07	3.06	10.82	3.10	10.59	3.15	10.49	3.16	10.21	3.22	10.06	3.24
							7	12.12	3.16	11.86	3.21	11.63	3.25	11.55	3.27	11.23	3.33	11.06	3.36
							10	13.17	3.27	12.91	3.32	12.66	3.36	12.55	3.38	12.24	3.44	12.07	3.47
							15	14.49	3.40	14.21	3.45	13.96	3.50	13.84	3.52	13.51	3.58	13.33	3.61

12. Capacity Table

12-6. AJ125TXJ5KH/EA

HEATING

Combination (Capacity Index)					Combination (Total)	Combination (%)	Outdoor Temperature (°F,DB)	Indoor Temperature (°F, DB)											
								57.2		60.8		64.4		69.98		71.6		75.2	
								TC(kbtu)	PI(kW)	TC(kbtu)	PI(kW)	TC(kbtu)	PI(kW)	TC(kbtu)	PI(kW)	TC(kbtu)	PI(kW)	TC(kbtu)	PI(kW)
2000	2000	2500	5000		11500	82%	-15	7.15	2.63	6.93	2.67	6.73	2.71	6.64	2.72	6.40	2.76	6.28	2.78
							-10	8.56	2.77	8.33	2.81	8.12	2.85	8.02	2.86	7.77	2.91	7.63	2.93
							-5	9.98	2.91	9.73	2.95	9.51	2.99	9.40	3.01	9.13	3.05	8.98	3.08
							0	11.40	3.04	11.14	3.09	10.90	3.13	10.79	3.15	10.50	3.20	10.34	3.23
							2	11.97	3.10	11.70	3.14	11.46	3.18	11.34	3.20	11.05	3.26	10.88	3.28
							7	13.11	3.20	12.83	3.25	12.57	3.29	12.49	3.31	12.14	3.37	11.96	3.40
							10	14.25	3.31	13.96	3.36	13.69	3.40	13.57	3.43	13.24	3.48	13.05	3.52
							15	15.67	3.44	15.37	3.49	15.09	3.54	14.96	3.56	14.61	3.62	14.41	3.66
2000	2000	2500	6800		13300	95%	-15	7.33	2.70	7.10	2.74	6.90	2.78	6.81	2.80	6.57	2.84	6.44	2.86
							-10	8.78	2.84	8.54	2.89	8.32	2.92	8.22	2.94	7.97	2.99	7.83	3.01
							-5	10.24	2.98	9.98	3.03	9.75	3.07	9.64	3.09	9.37	3.14	9.21	3.16
							0	11.69	3.12	11.42	3.17	11.18	3.21	11.07	3.23	10.77	3.28	10.60	3.31
							2	12.28	3.18	12.00	3.23	11.75	3.27	11.64	3.29	11.33	3.34	11.16	3.37
							7	13.44	3.29	13.16	3.34	12.90	3.38	12.81	3.40	12.45	3.46	12.27	3.49
							10	14.61	3.40	14.31	3.45	14.04	3.50	13.92	3.52	13.58	3.58	13.39	3.61
							15	16.07	3.54	15.76	3.59	15.48	3.64	15.35	3.66	14.99	3.72	14.78	3.76
2000	2000	3500	3500		11000	79%	-15	7.03	2.58	6.81	2.61	6.61	2.65	6.53	2.66	6.30	2.70	6.18	2.73
							-10	8.42	2.71	8.19	2.75	7.98	2.79	7.88	2.80	7.64	2.85	7.50	2.87
							-5	9.81	2.84	9.57	2.89	9.35	2.92	9.24	2.94	8.98	2.99	8.83	3.02
							0	11.21	2.98	10.95	3.02	10.72	3.06	10.61	3.08	10.32	3.13	10.16	3.16
							2	11.77	3.03	11.50	3.08	11.26	3.12	11.15	3.14	10.86	3.19	10.70	3.22
							7	12.89	3.14	12.61	3.18	12.36	3.22	12.28	3.24	11.94	3.30	11.76	3.33
							10	14.01	3.24	13.72	3.29	13.46	3.33	13.34	3.35	13.02	3.41	12.83	3.44
							15	15.41	3.37	15.11	3.42	14.84	3.47	14.71	3.49	14.37	3.55	14.17	3.58
2000	2000	3500	5000		12500	89%	-15	7.21	2.66	6.99	2.69	6.79	2.73	6.70	2.75	6.46	2.79	6.34	2.81
							-10	8.64	2.79	8.40	2.84	8.19	2.87	8.09	2.89	7.84	2.93	7.70	2.96
							-5	10.07	2.93	9.82	2.98	9.59	3.02	9.49	3.03	9.21	3.08	9.06	3.11
							0	11.50	3.07	11.24	3.11	10.99	3.16	10.88	3.18	10.59	3.23	10.43	3.26
							2	12.07	3.12	11.80	3.17	11.56	3.21	11.44	3.23	11.14	3.28	10.97	3.31
							7	13.22	3.23	12.94	3.28	12.68	3.32	12.60	3.34	12.25	3.40	12.07	3.43
							10	14.37	3.34	14.08	3.39	13.81	3.44	13.69	3.46	13.36	3.51	13.17	3.55
							15	15.81	3.47	15.51	3.53	15.23	3.57	15.09	3.60	14.74	3.66	14.54	3.69
2000	2000	3500	6800		14300	102%	-15	7.44	2.71	7.21	2.75	7.00	2.79	6.91	2.80	6.67	2.85	6.54	2.87
							-10	8.91	2.85	8.67	2.90	8.45	2.93	8.35	2.95	8.08	3.00	7.94	3.02
							-5	10.39	2.99	10.13	3.04	9.89	3.08	9.79	3.10	9.50	3.15	9.35	3.17
							0	11.87	3.13	11.59	3.18	11.34	3.22	11.23	3.24	10.93	3.29	10.76	3.32
							2	12.46	3.19	12.18	3.24	11.92	3.28	11.81	3.30	11.50	3.35	11.32	3.38
							7	13.64	3.30	13.35	3.35	13.09	3.39	13.00	3.41	12.64	3.47	12.45	3.50
							10	14.83	3.41	14.53	3.46	14.25	3.51	14.12	3.53	13.78	3.59	13.58	3.62
							15	16.31	3.55	16.00	3.60	15.71	3.65	15.57	3.67	15.21	3.73	15.00	3.77
2000	2000	5000	5000		14000	100%	-15	7.44	2.71	7.21	2.75	7.00	2.79	6.91	2.80	6.67	2.85	6.54	2.87
							-10	8.91	2.85	8.67	2.90	8.45	2.93	8.35	2.95	8.08	3.00	7.94	3.02
							-5	10.39	2.99	10.13	3.04	9.89	3.08	9.79	3.10	9.50	3.15	9.35	3.17
							0	11.87	3.13	11.59	3.18	11.34	3.22	11.23	3.24	10.93	3.29	10.76	3.32
							2	12.46	3.19	12.18	3.24	11.92	3.28	11.81	3.30	11.50	3.35	11.32	3.38
							7	13.64	3.30	13.35	3.35	13.09	3.39	13.00	3.41	12.64	3.47	12.45	3.50
							10	14.83	3.41	14.53	3.46	14.25	3.51	14.12	3.53	13.78	3.59	13.58	3.62
							15	16.31	3.55	16.00	3.60	15.71	3.65	15.57	3.67	15.21	3.73	15.00	3.77

12. Capacity Table

12-6. AJ125TXJ5KH/EA

HEATING

Combination (Capacity Index)					Combination (Total)	Combination (%)	Outdoor Temperature (°F,DB)	Indoor Temperature (°F, DB)											
								57.2		60.8		64.4		69.98		71.6		75.2	
								TC(kbtu)	PI(kW)	TC(kbtu)	PI(kW)	TC(kbtu)	PI(kW)	TC(kbtu)	PI(kW)	TC(kbtu)	PI(kW)	TC(kbtu)	PI(kW)
2000	2000	5000	6800		15800	113%	-15	7.73	2.75	7.49	2.79	7.27	2.83	7.17	2.84	6.92	2.89	6.79	2.91
							-10	9.26	2.89	9.00	2.94	8.77	2.98	8.67	2.99	8.39	3.04	8.25	3.07
							-5	10.79	3.04	10.52	3.08	10.27	3.12	10.16	3.14	9.87	3.19	9.71	3.22
							0	12.32	3.18	12.04	3.23	11.78	3.27	11.66	3.29	11.35	3.34	11.17	3.37
							2	12.94	3.24	12.65	3.28	12.38	3.33	12.26	3.35	11.94	3.40	11.76	3.43
							7	14.17	3.35	13.86	3.40	13.59	3.44	13.50	3.46	13.12	3.52	12.93	3.55
							10	15.40	3.46	15.09	3.51	14.80	3.56	14.67	3.58	14.31	3.64	14.11	3.68
							15	16.94	3.60	16.61	3.65	16.31	3.70	16.17	3.73	15.80	3.79	15.58	3.82
2000	2500	2500	2500		9500	68%	-15	6.69	2.63	6.48	2.67	6.30	2.71	6.21	2.72	5.99	2.76	5.88	2.78
							-10	8.02	2.77	7.79	2.81	7.60	2.85	7.50	2.86	7.27	2.91	7.14	2.93
							-5	9.34	2.91	9.11	2.95	8.90	2.99	8.80	3.01	8.55	3.05	8.41	3.08
							0	10.67	3.04	10.42	3.09	10.20	3.13	10.10	3.15	9.83	3.20	9.67	3.23
							2	11.20	3.10	10.95	3.14	10.72	3.18	10.62	3.20	10.34	3.26	10.18	3.28
							7	12.27	3.20	12.01	3.25	11.77	3.29	11.69	3.31	11.36	3.37	11.20	3.40
							10	13.33	3.31	13.06	3.36	12.82	3.40	12.70	3.43	12.39	3.48	12.22	3.52
							15	14.67	3.44	14.39	3.49	14.13	3.54	14.00	3.56	13.68	3.62	13.49	3.66
2000	2500	2500	3500		10500	75%	-15	6.69	2.63	6.48	2.67	6.30	2.71	6.21	2.72	5.99	2.76	5.88	2.78
							-10	8.02	2.77	7.79	2.81	7.60	2.85	7.50	2.86	7.27	2.91	7.14	2.93
							-5	9.34	2.91	9.11	2.95	8.90	2.99	8.80	3.01	8.55	3.05	8.41	3.08
							0	10.67	3.04	10.42	3.09	10.20	3.13	10.10	3.15	9.83	3.20	9.67	3.23
							2	11.20	3.10	10.95	3.14	10.72	3.18	10.62	3.20	10.34	3.26	10.18	3.28
							7	12.27	3.20	12.01	3.25	11.77	3.29	11.69	3.31	11.36	3.37	11.20	3.40
							10	13.33	3.31	13.06	3.36	12.82	3.40	12.70	3.43	12.39	3.48	12.22	3.52
							15	14.67	3.44	14.39	3.49	14.13	3.54	14.00	3.56	13.68	3.62	13.49	3.66
2000	2500	2500	5000		12000	86%	-15	7.23	2.66	7.00	2.70	6.80	2.74	6.71	2.75	6.48	2.80	6.35	2.82
							-10	8.66	2.80	8.42	2.84	8.21	2.88	8.11	2.90	7.85	2.94	7.72	2.97
							-5	10.09	2.94	9.84	2.98	9.61	3.02	9.51	3.04	9.23	3.09	9.08	3.12
							0	11.53	3.08	11.26	3.12	11.02	3.17	10.91	3.19	10.62	3.24	10.45	3.27
							2	12.10	3.13	11.83	3.18	11.59	3.22	11.47	3.24	11.17	3.29	11.00	3.32
							7	13.25	3.24	12.97	3.29	12.71	3.33	12.63	3.35	12.28	3.41	12.10	3.44
							10	14.41	3.35	14.11	3.40	13.85	3.45	13.72	3.47	13.39	3.53	13.20	3.56
							15	15.85	3.48	15.54	3.54	15.26	3.58	15.13	3.61	14.78	3.67	14.57	3.70
2000	2500	2500	6800		13800	99%	-15	7.44	2.71	7.21	2.75	7.00	2.79	6.91	2.80	6.67	2.85	6.54	2.87
							-10	8.91	2.85	8.67	2.90	8.45	2.93	8.35	2.95	8.08	3.00	7.94	3.02
							-5	10.39	2.99	10.13	3.04	9.89	3.08	9.79	3.10	9.50	3.15	9.35	3.17
							0	11.87	3.13	11.59	3.18	11.34	3.22	11.23	3.24	10.93	3.29	10.76	3.32
							2	12.46	3.19	12.18	3.24	11.92	3.28	11.81	3.30	11.50	3.35	11.32	3.38
							7	13.64	3.30	13.35	3.35	13.09	3.39	13.00	3.41	12.64	3.47	12.45	3.50
							10	14.83	3.41	14.53	3.46	14.25	3.51	14.12	3.53	13.78	3.59	13.58	3.62
							15	16.31	3.55	16.00	3.60	15.71	3.65	15.57	3.67	15.21	3.73	15.00	3.77
2000	2500	3500	3500		11500	82%	-15	7.12	2.62	6.89	2.65	6.69	2.69	6.60	2.70	6.37	2.75	6.25	2.77
							-10	8.52	2.75	8.29	2.79	8.08	2.83	7.98	2.85	7.73	2.89	7.59	2.92
							-5	9.93	2.89	9.68	2.93	9.46	2.97	9.36	2.99	9.09	3.04	8.94	3.06
							0	11.35	3.02	11.08	3.07	10.85	3.11	10.74	3.13	10.45	3.18	10.29	3.21
							2	11.91	3.08	11.64	3.12	11.40	3.16	11.29	3.18	10.99	3.24	10.83	3.26
							7	13.04	3.18	12.77	3.23	12.51	3.27	12.43	3.29	12.08	3.35	11.91	3.38
							10	14.18	3.29	13.89	3.34	13.63	3.38	13.50	3.41	13.18	3.46	12.99	3.49
							15	15.60	3.42	15.30	3.47	15.02	3.52	14.89	3.54	14.54	3.60	14.34	3.64

12. Capacity Table

12-6. AJ125TXJ5KH/EA

HEATING

Combination (Capacity Index)					Combination (Total)	Combination (%)	Outdoor Temperature (°F,DB)	Indoor Temperature (°F, DB)											
								57.2		60.8		64.4		69.98		71.6		75.2	
								TC(kbtu)	PI(kW)	TC(kbtu)	PI(kW)	TC(kbtu)	PI(kW)	TC(kbtu)	PI(kW)	TC(kbtu)	PI(kW)	TC(kbtu)	PI(kW)
2000	2500	3500	5000		13000	93%	-15	7.32	2.69	7.09	2.73	6.88	2.76	6.79	2.78	6.55	2.82	6.43	2.84
							-10	8.76	2.83	8.52	2.87	8.30	2.91	8.20	2.92	7.95	2.97	7.81	2.99
							-5	10.21	2.97	9.96	3.01	9.73	3.05	9.62	3.07	9.34	3.12	9.19	3.15
							0	11.67	3.11	11.40	3.15	11.15	3.19	11.04	3.21	10.74	3.27	10.58	3.29
							2	12.25	3.16	11.97	3.21	11.72	3.25	11.61	3.27	11.30	3.32	11.13	3.35
							7	13.41	3.27	13.13	3.32	12.87	3.36	12.78	3.38	12.42	3.44	12.24	3.47
							10	14.58	3.38	14.28	3.43	14.01	3.48	13.88	3.50	13.55	3.56	13.35	3.59
							15	16.04	3.52	15.73	3.57	15.44	3.62	15.31	3.64	14.95	3.70	14.75	3.74
2000	2500	5000	5000		14500	104%	-15	7.73	2.75	7.49	2.79	7.27	2.83	7.17	2.84	6.92	2.89	6.79	2.91
							-10	9.26	2.89	9.00	2.94	8.77	2.98	8.67	2.99	8.39	3.04	8.25	3.07
							-5	10.79	3.04	10.52	3.08	10.27	3.12	10.16	3.14	9.87	3.19	9.71	3.22
							0	12.32	3.18	12.04	3.23	11.78	3.27	11.66	3.29	11.35	3.34	11.17	3.37
							2	12.94	3.24	12.65	3.28	12.38	3.33	12.26	3.35	11.94	3.40	11.76	3.43
							7	14.17	3.35	13.86	3.40	13.59	3.44	13.50	3.46	13.12	3.52	12.93	3.55
							10	15.40	3.46	15.09	3.51	14.80	3.56	14.67	3.58	14.31	3.64	14.11	3.68
							15	16.94	3.60	16.61	3.65	16.31	3.70	16.17	3.73	15.80	3.79	15.58	3.82
2000	2500	3500	6800		14800	106%	-15	7.73	2.75	7.49	2.79	7.27	2.83	7.17	2.84	6.92	2.89	6.79	2.91
							-10	9.26	2.89	9.00	2.94	8.77	2.98	8.67	2.99	8.39	3.04	8.25	3.07
							-5	10.79	3.04	10.52	3.08	10.27	3.12	10.16	3.14	9.87	3.19	9.71	3.22
							0	12.32	3.18	12.04	3.23	11.78	3.27	11.66	3.29	11.35	3.34	11.17	3.37
							2	12.94	3.24	12.65	3.28	12.38	3.33	12.26	3.35	11.94	3.40	11.76	3.43
							7	14.17	3.35	13.86	3.40	13.59	3.44	13.50	3.46	13.12	3.52	12.93	3.55
							10	15.40	3.46	15.09	3.51	14.80	3.56	14.67	3.58	14.31	3.64	14.11	3.68
							15	16.94	3.60	16.61	3.65	16.31	3.70	16.17	3.73	15.80	3.79	15.58	3.82
2000	2500	5000	5000		14500	104%	-15	7.73	2.75	7.49	2.79	7.27	2.83	7.17	2.84	6.92	2.89	6.79	2.91
							-10	9.26	2.89	9.00	2.94	8.77	2.98	8.67	2.99	8.39	3.04	8.25	3.07
							-5	10.79	3.04	10.52	3.08	10.27	3.12	10.16	3.14	9.87	3.19	9.71	3.22
							0	12.32	3.18	12.04	3.23	11.78	3.27	11.66	3.29	11.35	3.34	11.17	3.37
							2	12.94	3.24	12.65	3.28	12.38	3.33	12.26	3.35	11.94	3.40	11.76	3.43
							7	14.17	3.35	13.86	3.40	13.59	3.44	13.50	3.46	13.12	3.52	12.93	3.55
							10	15.40	3.46	15.09	3.51	14.80	3.56	14.67	3.58	14.31	3.64	14.11	3.68
							15	16.94	3.60	16.61	3.65	16.31	3.70	16.17	3.73	15.80	3.79	15.58	3.82
2000	2500	5000	6800		16300	116%	-15	7.20	2.64	6.97	2.68	6.77	2.71	6.68	2.73	6.45	2.77	6.32	2.79
							-10	8.62	2.78	8.38	2.82	8.17	2.86	8.07	2.87	7.82	2.92	7.68	2.94
							-5	10.05	2.91	9.79	2.96	9.57	3.00	9.46	3.02	9.19	3.06	9.04	3.09
							0	11.47	3.05	11.21	3.10	10.97	3.14	10.86	3.16	10.57	3.21	10.40	3.24
							2	12.05	3.10	11.78	3.15	11.53	3.19	11.42	3.21	11.12	3.27	10.95	3.29
							7	13.19	3.21	12.91	3.26	12.65	3.30	12.57	3.32	12.22	3.38	12.04	3.41
							10	14.34	3.32	14.05	3.37	13.78	3.41	13.66	3.44	13.32	3.49	13.13	3.53
							15	15.77	3.45	15.47	3.50	15.19	3.55	15.06	3.57	14.71	3.64	14.50	3.67
2000	3500	3500	3500		12500	89%	-15	7.44	2.71	7.21	2.75	7.00	2.79	6.91	2.80	6.67	2.85	6.54	2.87
							-10	8.91	2.85	8.67	2.90	8.45	2.93	8.35	2.95	8.08	3.00	7.94	3.02
							-5	10.39	2.99	10.13	3.04	9.89	3.08	9.79	3.10	9.50	3.15	9.35	3.17
							0	11.87	3.13	11.59	3.18	11.34	3.22	11.23	3.24	10.93	3.29	10.76	3.32
							2	12.46	3.19	12.18	3.24	11.92	3.28	11.81	3.30	11.50	3.35	11.32	3.38
							7	13.64	3.30	13.35	3.35	13.09	3.39	13.00	3.41	12.64	3.47	12.45	3.50
							10	14.83	3.41	14.53	3.46	14.25	3.51	14.12	3.53	13.78	3.59	13.58	3.62
							15	16.31	3.55	16.00	3.60	15.71	3.65	15.57	3.67	15.21	3.73	15.00	3.77

12. Capacity Table

12-6. AJ125TXJ5KH/EA

HEATING

Combination (Capacity Index)					Combination (Total)	Combination (%)	Outdoor Temperature (°F,DB)	Indoor Temperature (°F, DB)											
								57.2		60.8		64.4		69.98		71.6		75.2	
								TC(kbtu)	PI(kW)	TC(kbtu)	PI(kW)	TC(kbtu)	PI(kW)	TC(kbtu)	PI(kW)	TC(kbtu)	PI(kW)	TC(kbtu)	PI(kW)
2000	3500	3500	5000		14000	100%	-15	7.73	2.75	7.49	2.79	7.27	2.83	7.17	2.84	6.92	2.89	6.79	2.91
							-10	9.26	2.89	9.00	2.94	8.77	2.98	8.67	2.99	8.39	3.04	8.25	3.07
							-5	10.79	3.04	10.52	3.08	10.27	3.12	10.16	3.14	9.87	3.19	9.71	3.22
							0	12.32	3.18	12.04	3.23	11.78	3.27	11.66	3.29	11.35	3.34	11.17	3.37
							2	12.94	3.24	12.65	3.28	12.38	3.33	12.26	3.35	11.94	3.40	11.76	3.43
							7	14.17	3.35	13.86	3.40	13.59	3.44	13.50	3.46	13.12	3.52	12.93	3.55
							10	15.40	3.46	15.09	3.51	14.80	3.56	14.67	3.58	14.31	3.64	14.11	3.68
							15	16.94	3.60	16.61	3.65	16.31	3.70	16.17	3.73	15.80	3.79	15.58	3.82
2000	3500	3500	6800		15800	113%	-15	7.73	2.75	7.49	2.79	7.27	2.83	7.17	2.84	6.92	2.89	6.79	2.91
							-10	9.26	2.89	9.00	2.94	8.77	2.98	8.67	2.99	8.39	3.04	8.25	3.07
							-5	10.79	3.04	10.52	3.08	10.27	3.12	10.16	3.14	9.87	3.19	9.71	3.22
							0	12.32	3.18	12.04	3.23	11.78	3.27	11.66	3.29	11.35	3.34	11.17	3.37
							2	12.94	3.24	12.65	3.28	12.38	3.33	12.26	3.35	11.94	3.40	11.76	3.43
							7	14.17	3.35	13.86	3.40	13.59	3.44	13.50	3.46	13.12	3.52	12.93	3.55
							10	15.40	3.46	15.09	3.51	14.80	3.56	14.67	3.58	14.31	3.64	14.11	3.68
							15	16.94	3.60	16.61	3.65	16.31	3.70	16.17	3.73	15.80	3.79	15.58	3.82
2000	3500	5000	5000		15500	111%	-15	7.73	2.75	7.49	2.79	7.27	2.83	7.17	2.84	6.92	2.89	6.79	2.91
							-10	9.26	2.89	9.00	2.94	8.77	2.98	8.67	2.99	8.39	3.04	8.25	3.07
							-5	10.79	3.04	10.52	3.08	10.27	3.12	10.16	3.14	9.87	3.19	9.71	3.22
							0	12.32	3.18	12.04	3.23	11.78	3.27	11.66	3.29	11.35	3.34	11.17	3.37
							2	12.94	3.24	12.65	3.28	12.38	3.33	12.26	3.35	11.94	3.40	11.76	3.43
							7	14.17	3.35	13.86	3.40	13.59	3.44	13.50	3.46	13.12	3.52	12.93	3.55
							10	15.40	3.46	15.09	3.51	14.80	3.56	14.67	3.58	14.31	3.64	14.11	3.68
							15	16.94	3.60	16.61	3.65	16.31	3.70	16.17	3.73	15.80	3.79	15.58	3.82
2000	3500	5000	6800		17300	124%	-15	7.73	2.75	7.49	2.79	7.27	2.83	7.17	2.84	6.92	2.89	6.79	2.91
							-10	9.26	2.89	9.00	2.94	8.77	2.98	8.67	2.99	8.39	3.04	8.25	3.07
							-5	10.79	3.04	10.52	3.08	10.27	3.12	10.16	3.14	9.87	3.19	9.71	3.22
							0	12.32	3.18	12.04	3.23	11.78	3.27	11.66	3.29	11.35	3.34	11.17	3.37
							2	12.94	3.24	12.65	3.28	12.38	3.33	12.26	3.35	11.94	3.40	11.76	3.43
							7	14.17	3.35	13.86	3.40	13.59	3.44	13.50	3.46	13.12	3.52	12.93	3.55
							10	15.40	3.46	15.09	3.51	14.80	3.56	14.67	3.58	14.31	3.64	14.11	3.68
							15	16.94	3.60	16.61	3.65	16.31	3.70	16.17	3.73	15.80	3.79	15.58	3.82
2000	5000	5000	5000		17000	121%	-15	6.71	2.63	6.50	2.67	6.31	2.71	6.23	2.72	6.01	2.76	5.89	2.78
							-10	8.04	2.77	7.81	2.81	7.61	2.85	7.52	2.86	7.29	2.91	7.16	2.93
							-5	9.37	2.91	9.13	2.95	8.92	2.99	8.82	3.01	8.57	3.05	8.43	3.08
							0	10.70	3.04	10.45	3.09	10.23	3.13	10.12	3.15	9.85	3.20	9.70	3.23
							2	11.23	3.10	10.98	3.14	10.75	3.18	10.65	3.20	10.36	3.26	10.21	3.28
							7	12.30	3.20	12.04	3.25	11.80	3.29	11.72	3.31	11.39	3.37	11.23	3.40
							10	13.37	3.31	13.10	3.36	12.85	3.40	12.73	3.43	12.42	3.48	12.25	3.52
							15	14.71	3.44	14.42	3.49	14.16	3.54	14.04	3.56	13.71	3.62	13.52	3.66
2500	2500	2500	2500		10000	71%	-15	7.15	2.62	6.93	2.65	6.73	2.69	6.64	2.70	6.40	2.75	6.28	2.77
							-10	8.56	2.75	8.33	2.79	8.12	2.83	8.02	2.85	7.77	2.89	7.63	2.92
							-5	9.98	2.89	9.73	2.93	9.51	2.97	9.40	2.99	9.13	3.04	8.98	3.06
							0	11.40	3.02	11.14	3.07	10.90	3.11	10.79	3.13	10.50	3.18	10.34	3.21
							2	11.97	3.08	11.70	3.12	11.46	3.16	11.34	3.18	11.05	3.24	10.88	3.26
							7	13.11	3.18	12.83	3.23	12.57	3.27	12.49	3.29	12.14	3.35	11.96	3.38
							10	14.25	3.29	13.96	3.34	13.69	3.38	13.57	3.41	13.24	3.46	13.05	3.49
							15	15.67	3.42	15.37	3.47	15.09	3.52	14.96	3.54	14.61	3.60	14.41	3.64

12. Capacity Table

12-6. AJ125TXJ5KH/EA

HEATING

Combination (Capacity Index)					Combination (Total)	Combination (%)	Outdoor Temperature (°F,DB)	Indoor Temperature (°F, DB)											
								57.2		60.8		64.4		69.98		71.6		75.2	
								TC(kbtu)	PI(kW)	TC(kbtu)	PI(kW)	TC(kbtu)	PI(kW)	TC(kbtu)	PI(kW)	TC(kbtu)	PI(kW)	TC(kbtu)	PI(kW)
2500	2500	2500	3500		11000	79%	-15	7.33	2.70	7.10	2.74	6.90	2.77	6.81	2.79	6.57	2.83	6.44	2.85
							-10	8.78	2.84	8.54	2.88	8.32	2.92	8.22	2.93	7.97	2.98	7.83	3.00
							-5	10.24	2.98	9.98	3.02	9.75	3.06	9.64	3.08	9.37	3.13	9.21	3.15
							0	11.69	3.12	11.42	3.16	11.18	3.20	11.07	3.22	10.77	3.28	10.60	3.30
							2	12.28	3.17	12.00	3.22	11.75	3.26	11.64	3.28	11.33	3.33	11.16	3.36
							7	13.44	3.28	13.16	3.33	12.90	3.37	12.81	3.39	12.45	3.45	12.27	3.48
							10	14.61	3.39	14.31	3.44	14.04	3.49	13.92	3.51	13.58	3.57	13.39	3.60
							15	16.07	3.53	15.76	3.58	15.48	3.63	15.35	3.65	14.99	3.71	14.78	3.75
2500	2500	2500	5000		12500	89%	-15	7.73	2.75	7.49	2.79	7.27	2.83	7.17	2.84	6.92	2.89	6.79	2.91
							-10	9.26	2.89	9.00	2.94	8.77	2.98	8.67	2.99	8.39	3.04	8.25	3.07
							-5	10.79	3.04	10.52	3.08	10.27	3.12	10.16	3.14	9.87	3.19	9.71	3.22
							0	12.32	3.18	12.04	3.23	11.78	3.27	11.66	3.29	11.35	3.34	11.17	3.37
							2	12.94	3.24	12.65	3.28	12.38	3.33	12.26	3.35	11.94	3.40	11.76	3.43
							7	14.17	3.35	13.86	3.40	13.59	3.44	13.50	3.46	13.12	3.52	12.93	3.55
							10	15.40	3.46	15.09	3.51	14.80	3.56	14.67	3.58	14.31	3.64	14.11	3.68
							15	16.94	3.60	16.61	3.65	16.31	3.70	16.17	3.73	15.80	3.79	15.58	3.82
2500	2500	2500	6800		14300	102%	-15	7.21	2.64	6.99	2.68	6.79	2.71	6.70	2.73	6.46	2.77	6.34	2.79
							-10	8.64	2.78	8.40	2.82	8.19	2.86	8.09	2.87	7.84	2.92	7.70	2.94
							-5	10.07	2.91	9.82	2.96	9.59	3.00	9.49	3.02	9.21	3.06	9.06	3.09
							0	11.50	3.05	11.24	3.10	10.99	3.14	10.88	3.16	10.59	3.21	10.43	3.24
							2	12.07	3.10	11.80	3.15	11.56	3.19	11.44	3.21	11.14	3.27	10.97	3.29
							7	13.22	3.21	12.94	3.26	12.68	3.30	12.60	3.32	12.25	3.38	12.07	3.41
							10	14.37	3.32	14.08	3.37	13.81	3.41	13.69	3.44	13.36	3.49	13.17	3.53
							15	15.81	3.45	15.51	3.50	15.23	3.55	15.09	3.57	14.74	3.64	14.54	3.67
2500	2500	3500	3500		12000	86%	-15	7.44	2.71	7.21	2.75	7.00	2.79	6.91	2.80	6.67	2.85	6.54	2.87
							-10	8.91	2.85	8.67	2.90	8.45	2.93	8.35	2.95	8.08	3.00	7.94	3.02
							-5	10.39	2.99	10.13	3.04	9.89	3.08	9.79	3.10	9.50	3.15	9.35	3.17
							0	11.87	3.13	11.59	3.18	11.34	3.22	11.23	3.24	10.93	3.29	10.76	3.32
							2	12.46	3.19	12.18	3.24	11.92	3.28	11.81	3.30	11.50	3.35	11.32	3.38
							7	13.64	3.30	13.35	3.35	13.09	3.39	13.00	3.41	12.64	3.47	12.45	3.50
							10	14.83	3.41	14.53	3.46	14.25	3.51	14.12	3.53	13.78	3.59	13.58	3.62
							15	16.31	3.55	16.00	3.60	15.71	3.65	15.57	3.67	15.21	3.73	15.00	3.77
2500	2500	3500	5000		13500	96%	-15	7.73	2.75	7.49	2.79	7.27	2.83	7.17	2.84	6.92	2.89	6.79	2.91
							-10	9.26	2.89	9.00	2.94	8.77	2.98	8.67	2.99	8.39	3.04	8.25	3.07
							-5	10.79	3.04	10.52	3.08	10.27	3.12	10.16	3.14	9.87	3.19	9.71	3.22
							0	12.32	3.18	12.04	3.23	11.78	3.27	11.66	3.29	11.35	3.34	11.17	3.37
							2	12.94	3.24	12.65	3.28	12.38	3.33	12.26	3.35	11.94	3.40	11.76	3.43
							7	14.17	3.35	13.86	3.40	13.59	3.44	13.50	3.46	13.12	3.52	12.93	3.55
							10	15.40	3.46	15.09	3.51	14.80	3.56	14.67	3.58	14.31	3.64	14.11	3.68
							15	16.94	3.60	16.61	3.65	16.31	3.70	16.17	3.73	15.80	3.79	15.58	3.82
2500	2500	3500	6800		15300	109%	-15	7.73	2.75	7.49	2.79	7.27	2.83	7.17	2.84	6.92	2.89	6.79	2.91
							-10	9.26	2.89	9.00	2.94	8.77	2.98	8.67	2.99	8.39	3.04	8.25	3.07
							-5	10.79	3.04	10.52	3.08	10.27	3.12	10.16	3.14	9.87	3.19	9.71	3.22
							0	12.32	3.18	12.04	3.23	11.78	3.27	11.66	3.29	11.35	3.34	11.17	3.37
							2	12.94	3.24	12.65	3.28	12.38	3.33	12.26	3.35	11.94	3.40	11.76	3.43
							7	14.17	3.35	13.86	3.40	13.59	3.44	13.50	3.46	13.12	3.52	12.93	3.55
							10	15.40	3.46	15.09	3.51	14.80	3.56	14.67	3.58	14.31	3.64	14.11	3.68
							15	16.94	3.60	16.61	3.65	16.31	3.70	16.17	3.73	15.80	3.79	15.58	3.82

12. Capacity Table

12-6. AJ125TXJ5KH/EA

HEATING

Combination (Capacity Index)					Combination (Total)	Combination (%)	Outdoor Temperature (°F,DB)	Indoor Temperature (°F, DB)											
								57.2		60.8		64.4		69.98		71.6		75.2	
								TC(kbtu)	PI(kW)	TC(kbtu)	PI(kW)	TC(kbtu)	PI(kW)	TC(kbtu)	PI(kW)	TC(kbtu)	PI(kW)	TC(kbtu)	PI(kW)
2500	2500	5000	5000		15000	107%	-15	7.73	2.75	7.49	2.79	7.27	2.83	7.17	2.84	6.92	2.89	6.79	2.91
							-10	9.26	2.89	9.00	2.94	8.77	2.98	8.67	2.99	8.39	3.04	8.25	3.07
							-5	10.79	3.04	10.52	3.08	10.27	3.12	10.16	3.14	9.87	3.19	9.71	3.22
							0	12.32	3.18	12.04	3.23	11.78	3.27	11.66	3.29	11.35	3.34	11.17	3.37
							2	12.94	3.24	12.65	3.28	12.38	3.33	12.26	3.35	11.94	3.40	11.76	3.43
							7	14.17	3.35	13.86	3.40	13.59	3.44	13.50	3.46	13.12	3.52	12.93	3.55
							10	15.40	3.46	15.09	3.51	14.80	3.56	14.67	3.58	14.31	3.64	14.11	3.68
							15	16.94	3.60	16.61	3.65	16.31	3.70	16.17	3.73	15.80	3.79	15.58	3.82
2500	2500	5000	6800		16800	120%	-15	7.30	2.66	7.07	2.70	6.87	2.74	6.77	2.75	6.54	2.80	6.41	2.82
							-10	8.74	2.80	8.50	2.84	8.28	2.88	8.19	2.90	7.93	2.94	7.79	2.97
							-5	10.19	2.94	9.93	2.98	9.70	3.02	9.60	3.04	9.32	3.09	9.17	3.12
							0	11.64	3.08	11.37	3.12	11.13	3.17	11.01	3.19	10.72	3.24	10.55	3.27
							2	12.22	3.13	11.94	3.18	11.70	3.22	11.58	3.24	11.28	3.29	11.10	3.32
							7	13.38	3.24	13.09	3.29	12.84	3.33	12.75	3.35	12.39	3.41	12.21	3.44
							10	14.54	3.35	14.25	3.40	13.98	3.45	13.85	3.47	13.51	3.53	13.32	3.56
							15	16.00	3.48	15.69	3.54	15.41	3.58	15.27	3.61	14.92	3.67	14.71	3.70
2500	3500	3500	3500		13000	93%	-15	7.73	2.75	7.49	2.79	7.27	2.83	7.17	2.84	6.92	2.89	6.79	2.91
							-10	9.26	2.89	9.00	2.94	8.77	2.98	8.67	2.99	8.39	3.04	8.25	3.07
							-5	10.79	3.04	10.52	3.08	10.27	3.12	10.16	3.14	9.87	3.19	9.71	3.22
							0	12.32	3.18	12.04	3.23	11.78	3.27	11.66	3.29	11.35	3.34	11.17	3.37
							2	12.94	3.24	12.65	3.28	12.38	3.33	12.26	3.35	11.94	3.40	11.76	3.43
							7	14.17	3.35	13.86	3.40	13.59	3.44	13.50	3.46	13.12	3.52	12.93	3.55
							10	15.40	3.46	15.09	3.51	14.80	3.56	14.67	3.58	14.31	3.64	14.11	3.68
							15	16.94	3.60	16.61	3.65	16.31	3.70	16.17	3.73	15.80	3.79	15.58	3.82
2500	3500	3500	5000		14500	104%	-15	7.73	2.75	7.49	2.79	7.27	2.83	7.17	2.84	6.92	2.89	6.79	2.91
							-10	9.26	2.89	9.00	2.94	8.77	2.98	8.67	2.99	8.39	3.04	8.25	3.07
							-5	10.79	3.04	10.52	3.08	10.27	3.12	10.16	3.14	9.87	3.19	9.71	3.22
							0	12.32	3.18	12.04	3.23	11.78	3.27	11.66	3.29	11.35	3.34	11.17	3.37
							2	12.94	3.24	12.65	3.28	12.38	3.33	12.26	3.35	11.94	3.40	11.76	3.43
							7	14.17	3.35	13.86	3.40	13.59	3.44	13.50	3.46	13.12	3.52	12.93	3.55
							10	15.40	3.46	15.09	3.51	14.80	3.56	14.67	3.58	14.31	3.64	14.11	3.68
							15	16.94	3.60	16.61	3.65	16.31	3.70	16.17	3.73	15.80	3.79	15.58	3.82
2500	3500	3500	6800		16300	116%	-15	7.73	2.75	7.49	2.79	7.27	2.83	7.17	2.84	6.92	2.89	6.79	2.91
							-10	9.26	2.89	9.00	2.94	8.77	2.98	8.67	2.99	8.39	3.04	8.25	3.07
							-5	10.79	3.04	10.52	3.08	10.27	3.12	10.16	3.14	9.87	3.19	9.71	3.22
							0	12.32	3.18	12.04	3.23	11.78	3.27	11.66	3.29	11.35	3.34	11.17	3.37
							2	12.94	3.24	12.65	3.28	12.38	3.33	12.26	3.35	11.94	3.40	11.76	3.43
							7	14.17	3.35	13.86	3.40	13.59	3.44	13.50	3.46	13.12	3.52	12.93	3.55
							10	15.40	3.46	15.09	3.51	14.80	3.56	14.67	3.58	14.31	3.64	14.11	3.68
							15	16.94	3.60	16.61	3.65	16.31	3.70	16.17	3.73	15.80	3.79	15.58	3.82
2500	3500	5000	5000		16000	114%	-15	7.73	2.75	7.49	2.79	7.27	2.83	7.17	2.84	6.92	2.89	6.79	2.91
							-10	9.26	2.89	9.00	2.94	8.77	2.98	8.67	2.99	8.39	3.04	8.25	3.07
							-5	10.79	3.04	10.52	3.08	10.27	3.12	10.16	3.14	9.87	3.19	9.71	3.22
							0	12.32	3.18	12.04	3.23	11.78	3.27	11.66	3.29	11.35	3.34	11.17	3.37
							2	12.94	3.24	12.65	3.28	12.38	3.33	12.26	3.35	11.94	3.40	11.76	3.43
							7	14.17	3.35	13.86	3.40	13.59	3.44	13.50	3.46	13.12	3.52	12.93	3.55
							10	15.40	3.46	15.09	3.51	14.80	3.56	14.67	3.58	14.31	3.64	14.11	3.68
							15	16.94	3.60	16.61	3.65	16.31	3.70	16.17	3.73	15.80	3.79	15.58	3.82

12. Capacity Table

12-6. AJ125TXJ5KH/EA

HEATING

Combination (Capacity Index)					Combination (Total)	Combination (%)	Outdoor Temperature (°F,DB)	Indoor Temperature (°F, DB)											
								57.2		60.8		64.4		69.98		71.6		75.2	
								TC(kbtu)	PI(kW)	TC(kbtu)	PI(kW)	TC(kbtu)	PI(kW)	TC(kbtu)	PI(kW)	TC(kbtu)	PI(kW)	TC(kbtu)	PI(kW)
2500	5000	5000	5000		17500	125%	-15	7.44	2.71	7.21	2.75	7.00	2.79	6.91	2.80	6.67	2.85	6.54	2.87
							-10	8.91	2.85	8.67	2.90	8.45	2.93	8.35	2.95	8.08	3.00	7.94	3.02
							-5	10.39	2.99	10.13	3.04	9.89	3.08	9.79	3.10	9.50	3.15	9.35	3.17
							0	11.87	3.13	11.59	3.18	11.34	3.22	11.23	3.24	10.93	3.29	10.76	3.32
							2	12.46	3.19	12.18	3.24	11.92	3.28	11.81	3.30	11.50	3.35	11.32	3.38
							7	13.64	3.30	13.35	3.35	13.09	3.39	13.00	3.41	12.64	3.47	12.45	3.50
							10	14.83	3.41	14.53	3.46	14.25	3.51	14.12	3.53	13.78	3.59	13.58	3.62
							15	16.31	3.55	16.00	3.60	15.71	3.65	15.57	3.67	15.21	3.73	15.00	3.77
3500	3500	3500	3500		14000	100%	-15	7.73	2.75	7.49	2.79	7.27	2.83	7.17	2.84	6.92	2.89	6.79	2.91
							-10	9.26	2.89	9.00	2.94	8.77	2.98	8.67	2.99	8.39	3.04	8.25	3.07
							-5	10.79	3.04	10.52	3.08	10.27	3.12	10.16	3.14	9.87	3.19	9.71	3.22
							0	12.32	3.18	12.04	3.23	11.78	3.27	11.66	3.29	11.35	3.34	11.17	3.37
							2	12.94	3.24	12.65	3.28	12.38	3.33	12.26	3.35	11.94	3.40	11.76	3.43
							7	14.17	3.35	13.86	3.40	13.59	3.44	13.50	3.46	13.12	3.52	12.93	3.55
							10	15.40	3.46	15.09	3.51	14.80	3.56	14.67	3.58	14.31	3.64	14.11	3.68
							15	16.94	3.60	16.61	3.65	16.31	3.70	16.17	3.73	15.80	3.79	15.58	3.82
3500	3500	3500	5000		15500	111%	-15	7.73	2.75	7.49	2.79	7.27	2.83	7.17	2.84	6.92	2.89	6.79	2.91
							-10	9.26	2.89	9.00	2.94	8.77	2.98	8.67	2.99	8.39	3.04	8.25	3.07
							-5	10.79	3.04	10.52	3.08	10.27	3.12	10.16	3.14	9.87	3.19	9.71	3.22
							0	12.32	3.18	12.04	3.23	11.78	3.27	11.66	3.29	11.35	3.34	11.17	3.37
							2	12.94	3.24	12.65	3.28	12.38	3.33	12.26	3.35	11.94	3.40	11.76	3.43
							7	14.17	3.35	13.86	3.40	13.59	3.44	13.50	3.46	13.12	3.52	12.93	3.55
							10	15.40	3.46	15.09	3.51	14.80	3.56	14.67	3.58	14.31	3.64	14.11	3.68
							15	16.94	3.60	16.61	3.65	16.31	3.70	16.17	3.73	15.80	3.79	15.58	3.82
3500	3500	3500	6800		17300	124%	-15	7.73	2.75	7.49	2.79	7.27	2.83	7.17	2.84	6.92	2.89	6.79	2.91
							-10	9.26	2.89	9.00	2.94	8.77	2.98	8.67	2.99	8.39	3.04	8.25	3.07
							-5	10.79	3.04	10.52	3.08	10.27	3.12	10.16	3.14	9.87	3.19	9.71	3.22
							0	12.32	3.18	12.04	3.23	11.78	3.27	11.66	3.29	11.35	3.34	11.17	3.37
							2	12.94	3.24	12.65	3.28	12.38	3.33	12.26	3.35	11.94	3.40	11.76	3.43
							7	14.17	3.35	13.86	3.40	13.59	3.44	13.50	3.46	13.12	3.52	12.93	3.55
							10	15.40	3.46	15.09	3.51	14.80	3.56	14.67	3.58	14.31	3.64	14.11	3.68
							15	16.94	3.60	16.61	3.65	16.31	3.70	16.17	3.73	15.80	3.79	15.58	3.82
2000	2000	2000	2000	2000	10000	71%	-15	6.30	2.52	6.10	2.56	5.92	2.59	5.85	2.61	5.64	2.65	5.53	2.67
							-10	7.54	2.65	7.33	2.69	7.15	2.73	7.06	2.74	6.84	2.79	6.72	2.81
							-5	8.79	2.78	8.57	2.82	8.37	2.86	8.28	2.88	8.04	2.92	7.91	2.95
							0	10.04	2.91	9.81	2.96	9.60	3.00	9.50	3.01	9.25	3.06	9.10	3.09
							2	10.54	2.96	10.30	3.01	10.09	3.05	9.99	3.07	9.73	3.12	9.58	3.15
							7	11.54	3.07	11.30	3.11	11.07	3.16	11.00	3.17	10.69	3.23	10.54	3.26
							10	12.55	3.17	12.29	3.22	12.06	3.26	11.95	3.28	11.66	3.34	11.49	3.37
							15	13.80	3.30	13.54	3.35	13.29	3.39	13.18	3.41	12.87	3.47	12.69	3.50
2000	2000	2000	2000	2500	10500	75%	-15	6.87	2.69	6.65	2.73	6.46	2.76	6.38	2.78	6.15	2.82	6.04	2.84
							-10	8.23	2.83	8.00	2.87	7.80	2.91	7.70	2.92	7.46	2.97	7.33	2.99
							-5	9.59	2.97	9.35	3.01	9.13	3.05	9.03	3.07	8.77	3.12	8.63	3.15
							0	10.95	3.11	10.70	3.15	10.47	3.19	10.37	3.21	10.09	3.27	9.93	3.29
							2	11.50	3.16	11.24	3.21	11.01	3.25	10.90	3.27	10.61	3.32	10.45	3.35
							7	12.59	3.27	12.32	3.32	12.08	3.36	12.00	3.38	11.67	3.44	11.49	3.47
							10	13.69	3.38	13.41	3.43	13.15	3.48	13.04	3.50	12.72	3.56	12.54	3.59
							15	15.06	3.52	14.77	3.57	14.50	3.62	14.38	3.64	14.04	3.70	13.85	3.74

12. Capacity Table

12-6. AJ125TXJ5KH/EA

HEATING

Combination (Capacity Index)					Combination (Total)	Combination (%)	Outdoor Temperature (°F,DB)	Indoor Temperature (°F, DB)											
								57.2		60.8		64.4		69.98		71.6		75.2	
								TC(kbtu)	PI(kW)	TC(kbtu)	PI(kW)	TC(kbtu)	PI(kW)	TC(kbtu)	PI(kW)	TC(kbtu)	PI(kW)	TC(kbtu)	PI(kW)
2000	2000	2000	2000	3500	11500	82%	-15	7.33	2.66	7.10	2.69	6.89	2.73	6.80	2.75	6.56	2.79	6.44	2.81
							-10	8.78	2.79	8.53	2.84	8.32	2.87	8.22	2.89	7.96	2.93	7.82	2.96
							-5	10.23	2.93	9.97	2.98	9.74	3.02	9.64	3.03	9.36	3.08	9.21	3.11
							0	11.68	3.07	11.41	3.11	11.17	3.16	11.06	3.18	10.76	3.23	10.59	3.26
							2	12.27	3.12	11.99	3.17	11.74	3.21	11.63	3.23	11.32	3.28	11.15	3.31
							7	13.43	3.23	13.15	3.28	12.89	3.32	12.80	3.34	12.44	3.40	12.26	3.43
							10	14.60	3.34	14.30	3.39	14.03	3.44	13.91	3.46	13.57	3.51	13.37	3.55
							15	16.06	3.47	15.75	3.53	15.47	3.57	15.33	3.60	14.98	3.66	14.77	3.69
2000	2000	2000	2000	5000	13000	93%	-15	7.73	2.75	7.49	2.79	7.27	2.83	7.17	2.84	6.92	2.89	6.79	2.91
							-10	9.26	2.89	9.00	2.94	8.77	2.98	8.67	2.99	8.39	3.04	8.25	3.07
							-5	10.79	3.04	10.52	3.08	10.27	3.12	10.16	3.14	9.87	3.19	9.71	3.22
							0	12.32	3.18	12.04	3.23	11.78	3.27	11.66	3.29	11.35	3.34	11.17	3.37
							2	12.94	3.24	12.65	3.28	12.38	3.33	12.26	3.35	11.94	3.40	11.76	3.43
							7	14.17	3.35	13.86	3.40	13.59	3.44	13.50	3.46	13.12	3.52	12.93	3.55
							10	15.40	3.46	15.09	3.51	14.80	3.56	14.67	3.58	14.31	3.64	14.11	3.68
							15	16.94	3.60	16.61	3.65	16.31	3.70	16.17	3.73	15.80	3.79	15.58	3.82
2000	2000	2000	2000	6800	14800	106%	-15	7.73	2.75	7.49	2.79	7.27	2.83	7.17	2.84	6.92	2.89	6.79	2.91
							-10	9.26	2.89	9.00	2.94	8.77	2.98	8.67	2.99	8.39	3.04	8.25	3.07
							-5	10.79	3.04	10.52	3.08	10.27	3.12	10.16	3.14	9.87	3.19	9.71	3.22
							0	12.32	3.18	12.04	3.23	11.78	3.27	11.66	3.29	11.35	3.34	11.17	3.37
							2	12.94	3.24	12.65	3.28	12.38	3.33	12.26	3.35	11.94	3.40	11.76	3.43
							7	14.17	3.35	13.86	3.40	13.59	3.44	13.50	3.46	13.12	3.52	12.93	3.55
							10	15.40	3.46	15.09	3.51	14.80	3.56	14.67	3.58	14.31	3.64	14.11	3.68
							15	16.94	3.60	16.61	3.65	16.31	3.70	16.17	3.73	15.80	3.79	15.58	3.82
2000	2000	2000	2500	2500	11000	79%	-15	7.44	2.62	7.21	2.66	7.00	2.70	6.91	2.71	6.67	2.75	6.54	2.78
							-10	8.91	2.76	8.67	2.80	8.45	2.84	8.35	2.86	8.08	2.90	7.94	2.92
							-5	10.39	2.90	10.13	2.94	9.89	2.98	9.79	3.00	9.50	3.04	9.35	3.07
							0	11.87	3.03	11.59	3.08	11.34	3.12	11.23	3.14	10.93	3.19	10.76	3.22
							2	12.46	3.09	12.18	3.13	11.92	3.17	11.81	3.19	11.50	3.25	11.32	3.27
							7	13.64	3.19	13.35	3.24	13.09	3.28	13.00	3.30	12.64	3.36	12.45	3.39
							10	14.83	3.30	14.53	3.35	14.25	3.39	14.12	3.42	13.78	3.47	13.58	3.51
							15	16.31	3.43	16.00	3.48	15.71	3.53	15.57	3.55	15.21	3.61	15.00	3.65
2000	2000	2000	2500	3500	12000	86%	-15	7.73	2.75	7.49	2.79	7.27	2.83	7.17	2.84	6.92	2.89	6.79	2.91
							-10	9.26	2.89	9.00	2.94	8.77	2.98	8.67	2.99	8.39	3.04	8.25	3.07
							-5	10.79	3.04	10.52	3.08	10.27	3.12	10.16	3.14	9.87	3.19	9.71	3.22
							0	12.32	3.18	12.04	3.23	11.78	3.27	11.66	3.29	11.35	3.34	11.17	3.37
							2	12.94	3.24	12.65	3.28	12.38	3.33	12.26	3.35	11.94	3.40	11.76	3.43
							7	14.17	3.35	13.86	3.40	13.59	3.44	13.50	3.46	13.12	3.52	12.93	3.55
							10	15.40	3.46	15.09	3.51	14.80	3.56	14.67	3.58	14.31	3.64	14.11	3.68
							15	16.94	3.60	16.61	3.65	16.31	3.70	16.17	3.73	15.80	3.79	15.58	3.82
2000	2000	2000	2500	5000	13500	96%	-15	7.73	2.75	7.49	2.79	7.27	2.83	7.17	2.84	6.92	2.89	6.79	2.91
							-10	9.26	2.89	9.00	2.94	8.77	2.98	8.67	2.99	8.39	3.04	8.25	3.07
							-5	10.79	3.04	10.52	3.08	10.27	3.12	10.16	3.14	9.87	3.19	9.71	3.22
							0	12.32	3.18	12.04	3.23	11.78	3.27	11.66	3.29	11.35	3.34	11.17	3.37
							2	12.94	3.24	12.65	3.28	12.38	3.33	12.26	3.35	11.94	3.40	11.76	3.43
							7	14.17	3.35	13.86	3.40	13.59	3.44	13.50	3.46	13.12	3.52	12.93	3.55
							10	15.40	3.46	15.09	3.51	14.80	3.56	14.67	3.58	14.31	3.64	14.11	3.68
							15	16.94	3.60	16.61	3.65	16.31	3.70	16.17	3.73	15.80	3.79	15.58	3.82

12. Capacity Table

12-6. AJ125TXJ5KH/EA

HEATING

Combination (Capacity Index)					Combination (Total)	Combination (%)	Outdoor Temperature (°F,DB)	Indoor Temperature (°F, DB)											
								57.2		60.8		64.4		69.98		71.6		75.2	
								TC(kbtu)	PI(kW)	TC(kbtu)	PI(kW)	TC(kbtu)	PI(kW)	TC(kbtu)	PI(kW)	TC(kbtu)	PI(kW)	TC(kbtu)	PI(kW)
2000	2000	2000	2500	6800	15300	109%	-15	7.73	2.75	7.49	2.79	7.27	2.83	7.17	2.84	6.92	2.89	6.79	2.91
							-10	9.26	2.89	9.00	2.94	8.77	2.98	8.67	2.99	8.39	3.04	8.25	3.07
							-5	10.79	3.04	10.52	3.08	10.27	3.12	10.16	3.14	9.87	3.19	9.71	3.22
							0	12.32	3.18	12.04	3.23	11.78	3.27	11.66	3.29	11.35	3.34	11.17	3.37
							2	12.94	3.24	12.65	3.28	12.38	3.33	12.26	3.35	11.94	3.40	11.76	3.43
							7	14.17	3.35	13.86	3.40	13.59	3.44	13.50	3.46	13.12	3.52	12.93	3.55
							10	15.40	3.46	15.09	3.51	14.80	3.56	14.67	3.58	14.31	3.64	14.11	3.68
							15	16.94	3.60	16.61	3.65	16.31	3.70	16.17	3.73	15.80	3.79	15.58	3.82
2000	2000	2000	3500	3500	13000	93%	-15	7.73	2.75	7.49	2.79	7.27	2.83	7.17	2.84	6.92	2.89	6.79	2.91
							-10	9.26	2.89	9.00	2.94	8.77	2.98	8.67	2.99	8.39	3.04	8.25	3.07
							-5	10.79	3.04	10.52	3.08	10.27	3.12	10.16	3.14	9.87	3.19	9.71	3.22
							0	12.32	3.18	12.04	3.23	11.78	3.27	11.66	3.29	11.35	3.34	11.17	3.37
							2	12.94	3.24	12.65	3.28	12.38	3.33	12.26	3.35	11.94	3.40	11.76	3.43
							7	14.17	3.35	13.86	3.40	13.59	3.44	13.50	3.46	13.12	3.52	12.93	3.55
							10	15.40	3.46	15.09	3.51	14.80	3.56	14.67	3.58	14.31	3.64	14.11	3.68
							15	16.94	3.60	16.61	3.65	16.31	3.70	16.17	3.73	15.80	3.79	15.58	3.82
2000	2000	2000	3500	5000	14500	104%	-15	7.73	2.75	7.49	2.79	7.27	2.83	7.17	2.84	6.92	2.89	6.79	2.91
							-10	9.26	2.89	9.00	2.94	8.77	2.98	8.67	2.99	8.39	3.04	8.25	3.07
							-5	10.79	3.04	10.52	3.08	10.27	3.12	10.16	3.14	9.87	3.19	9.71	3.22
							0	12.32	3.18	12.04	3.23	11.78	3.27	11.66	3.29	11.35	3.34	11.17	3.37
							2	12.94	3.24	12.65	3.28	12.38	3.33	12.26	3.35	11.94	3.40	11.76	3.43
							7	14.17	3.35	13.86	3.40	13.59	3.44	13.50	3.46	13.12	3.52	12.93	3.55
							10	15.40	3.46	15.09	3.51	14.80	3.56	14.67	3.58	14.31	3.64	14.11	3.68
							15	16.94	3.60	16.61	3.65	16.31	3.70	16.17	3.73	15.80	3.79	15.58	3.82
2000	2000	2000	3500	6800	16300	116%	-15	7.73	2.75	7.49	2.79	7.27	2.83	7.17	2.84	6.92	2.89	6.79	2.91
							-10	9.26	2.89	9.00	2.94	8.77	2.98	8.67	2.99	8.39	3.04	8.25	3.07
							-5	10.79	3.04	10.52	3.08	10.27	3.12	10.16	3.14	9.87	3.19	9.71	3.22
							0	12.32	3.18	12.04	3.23	11.78	3.27	11.66	3.29	11.35	3.34	11.17	3.37
							2	12.94	3.24	12.65	3.28	12.38	3.33	12.26	3.35	11.94	3.40	11.76	3.43
							7	14.17	3.35	13.86	3.40	13.59	3.44	13.50	3.46	13.12	3.52	12.93	3.55
							10	15.40	3.46	15.09	3.51	14.80	3.56	14.67	3.58	14.31	3.64	14.11	3.68
							15	16.94	3.60	16.61	3.65	16.31	3.70	16.17	3.73	15.80	3.79	15.58	3.82
2000	2000	2000	5000	5000	16000	114%	-15	7.73	2.75	7.49	2.79	7.27	2.83	7.17	2.84	6.92	2.89	6.79	2.91
							-10	9.26	2.89	9.00	2.94	8.77	2.98	8.67	2.99	8.39	3.04	8.25	3.07
							-5	10.79	3.04	10.52	3.08	10.27	3.12	10.16	3.14	9.87	3.19	9.71	3.22
							0	12.32	3.18	12.04	3.23	11.78	3.27	11.66	3.29	11.35	3.34	11.17	3.37
							2	12.94	3.24	12.65	3.28	12.38	3.33	12.26	3.35	11.94	3.40	11.76	3.43
							7	14.17	3.35	13.86	3.40	13.59	3.44	13.50	3.46	13.12	3.52	12.93	3.55
							10	15.40	3.46	15.09	3.51	14.80	3.56	14.67	3.58	14.31	3.64	14.11	3.68
							15	16.94	3.60	16.61	3.65	16.31	3.70	16.17	3.73	15.80	3.79	15.58	3.82
2000	2000	2500	2500	2500	11500	82%	-15	7.73	2.75	7.49	2.79	7.27	2.83	7.17	2.84	6.92	2.89	6.79	2.91
							-10	9.26	2.89	9.00	2.94	8.77	2.98	8.67	2.99	8.39	3.04	8.25	3.07
							-5	10.79	3.04	10.52	3.08	10.27	3.12	10.16	3.14	9.87	3.19	9.71	3.22
							0	12.32	3.18	12.04	3.23	11.78	3.27	11.66	3.29	11.35	3.34	11.17	3.37
							2	12.94	3.24	12.65	3.28	12.38	3.33	12.26	3.35	11.94	3.40	11.76	3.43
							7	14.17	3.35	13.86	3.40	13.59	3.44	13.50	3.46	13.12	3.52	12.93	3.55
							10	15.40	3.46	15.09	3.51	14.80	3.56	14.67	3.58	14.31	3.64	14.11	3.68
							15	16.94	3.60	16.61	3.65	16.31	3.70	16.17	3.73	15.80	3.79	15.58	3.82

12. Capacity Table

12-6. AJ125TXJ5KH/EA

HEATING

Combination (Capacity Index)					Combination (Total)	Combination (%)	Outdoor Temperature (°F,DB)	Indoor Temperature (°F, DB)											
								57.2		60.8		64.4		69.98		71.6		75.2	
								TC(kbtu)	PI(kW)	TC(kbtu)	PI(kW)	TC(kbtu)	PI(kW)	TC(kbtu)	PI(kW)	TC(kbtu)	PI(kW)	TC(kbtu)	PI(kW)
2000	2000	2500	2500	3500	12500	89%	-15	7.73	2.75	7.49	2.79	7.27	2.83	7.17	2.84	6.92	2.89	6.79	2.91
							-10	9.26	2.89	9.00	2.94	8.77	2.98	8.67	2.99	8.39	3.04	8.25	3.07
							-5	10.79	3.04	10.52	3.08	10.27	3.12	10.16	3.14	9.87	3.19	9.71	3.22
							0	12.32	3.18	12.04	3.23	11.78	3.27	11.66	3.29	11.35	3.34	11.17	3.37
							2	12.94	3.24	12.65	3.28	12.38	3.33	12.26	3.35	11.94	3.40	11.76	3.43
							7	14.17	3.35	13.86	3.40	13.59	3.44	13.50	3.46	13.12	3.52	12.93	3.55
							10	15.40	3.46	15.09	3.51	14.80	3.56	14.67	3.58	14.31	3.64	14.11	3.68
							15	16.94	3.60	16.61	3.65	16.31	3.70	16.17	3.73	15.80	3.79	15.58	3.82
2000	2000	2500	2500	5000	14000	100%	-15	7.73	2.75	7.49	2.79	7.27	2.83	7.17	2.84	6.92	2.89	6.79	2.91
							-10	9.26	2.89	9.00	2.94	8.77	2.98	8.67	2.99	8.39	3.04	8.25	3.07
							-5	10.79	3.04	10.52	3.08	10.27	3.12	10.16	3.14	9.87	3.19	9.71	3.22
							0	12.32	3.18	12.04	3.23	11.78	3.27	11.66	3.29	11.35	3.34	11.17	3.37
							2	12.94	3.24	12.65	3.28	12.38	3.33	12.26	3.35	11.94	3.40	11.76	3.43
							7	14.17	3.35	13.86	3.40	13.59	3.44	13.50	3.46	13.12	3.52	12.93	3.55
							10	15.40	3.46	15.09	3.51	14.80	3.56	14.67	3.58	14.31	3.64	14.11	3.68
							15	16.94	3.60	16.61	3.65	16.31	3.70	16.17	3.73	15.80	3.79	15.58	3.82
2000	2000	2500	2500	6800	15800	113%	-15	7.73	2.75	7.49	2.79	7.27	2.83	7.17	2.84	6.92	2.89	6.79	2.91
							-10	9.26	2.89	9.00	2.94	8.77	2.98	8.67	2.99	8.39	3.04	8.25	3.07
							-5	10.79	3.04	10.52	3.08	10.27	3.12	10.16	3.14	9.87	3.19	9.71	3.22
							0	12.32	3.18	12.04	3.23	11.78	3.27	11.66	3.29	11.35	3.34	11.17	3.37
							2	12.94	3.24	12.65	3.28	12.38	3.33	12.26	3.35	11.94	3.40	11.76	3.43
							7	14.17	3.35	13.86	3.40	13.59	3.44	13.50	3.46	13.12	3.52	12.93	3.55
							10	15.40	3.46	15.09	3.51	14.80	3.56	14.67	3.58	14.31	3.64	14.11	3.68
							15	16.94	3.60	16.61	3.65	16.31	3.70	16.17	3.73	15.80	3.79	15.58	3.82
2000	2000	2500	3500	3500	13500	96%	-15	7.73	2.75	7.49	2.79	7.27	2.83	7.17	2.84	6.92	2.89	6.79	2.91
							-10	9.26	2.89	9.00	2.94	8.77	2.98	8.67	2.99	8.39	3.04	8.25	3.07
							-5	10.79	3.04	10.52	3.08	10.27	3.12	10.16	3.14	9.87	3.19	9.71	3.22
							0	12.32	3.18	12.04	3.23	11.78	3.27	11.66	3.29	11.35	3.34	11.17	3.37
							2	12.94	3.24	12.65	3.28	12.38	3.33	12.26	3.35	11.94	3.40	11.76	3.43
							7	14.17	3.35	13.86	3.40	13.59	3.44	13.50	3.46	13.12	3.52	12.93	3.55
							10	15.40	3.46	15.09	3.51	14.80	3.56	14.67	3.58	14.31	3.64	14.11	3.68
							15	16.94	3.60	16.61	3.65	16.31	3.70	16.17	3.73	15.80	3.79	15.58	3.82
2000	2000	2500	3500	5000	15000	107%	-15	7.73	2.75	7.49	2.79	7.27	2.83	7.17	2.84	6.92	2.89	6.79	2.91
							-10	9.26	2.89	9.00	2.94	8.77	2.98	8.67	2.99	8.39	3.04	8.25	3.07
							-5	10.79	3.04	10.52	3.08	10.27	3.12	10.16	3.14	9.87	3.19	9.71	3.22
							0	12.32	3.18	12.04	3.23	11.78	3.27	11.66	3.29	11.35	3.34	11.17	3.37
							2	12.94	3.24	12.65	3.28	12.38	3.33	12.26	3.35	11.94	3.40	11.76	3.43
							7	14.17	3.35	13.86	3.40	13.59	3.44	13.50	3.46	13.12	3.52	12.93	3.55
							10	15.40	3.46	15.09	3.51	14.80	3.56	14.67	3.58	14.31	3.64	14.11	3.68
							15	16.94	3.60	16.61	3.65	16.31	3.70	16.17	3.73	15.80	3.79	15.58	3.82
2000	2000	2500	3500	6800	16800	120%	-15	7.73	2.75	7.49	2.79	7.27	2.83	7.17	2.84	6.92	2.89	6.79	2.91
							-10	9.26	2.89	9.00	2.94	8.77	2.98	8.67	2.99	8.39	3.04	8.25	3.07
							-5	10.79	3.04	10.52	3.08	10.27	3.12	10.16	3.14	9.87	3.19	9.71	3.22
							0	12.32	3.18	12.04	3.23	11.78	3.27	11.66	3.29	11.35	3.34	11.17	3.37
							2	12.94	3.24	12.65	3.28	12.38	3.33	12.26	3.35	11.94	3.40	11.76	3.43
							7	14.17	3.35	13.86	3.40	13.59	3.44	13.50	3.46	13.12	3.52	12.93	3.55
							10	15.40	3.46	15.09	3.51	14.80	3.56	14.67	3.58	14.31	3.64	14.11	3.68
							15	16.94	3.60	16.61	3.65	16.31	3.70	16.17	3.73	15.80	3.79	15.58	3.82

12. Capacity Table

12-6. AJ125TXJ5KH/EA

HEATING

Combination (Capacity Index)					Combination (Total)	Combination (%)	Outdoor Temperature (°F,DB)	Indoor Temperature (°F, DB)											
								57.2		60.8		64.4		69.98		71.6		75.2	
								TC(kbtu)	PI(kW)	TC(kbtu)	PI(kW)	TC(kbtu)	PI(kW)	TC(kbtu)	PI(kW)	TC(kbtu)	PI(kW)	TC(kbtu)	PI(kW)
2000	2000	2500	5000	5000	16500	118%	-15	7.73	2.75	7.49	2.79	7.27	2.83	7.17	2.84	6.92	2.89	6.79	2.91
							-10	9.26	2.89	9.00	2.94	8.77	2.98	8.67	2.99	8.39	3.04	8.25	3.07
							-5	10.79	3.04	10.52	3.08	10.27	3.12	10.16	3.14	9.87	3.19	9.71	3.22
							0	12.32	3.18	12.04	3.23	11.78	3.27	11.66	3.29	11.35	3.34	11.17	3.37
							2	12.94	3.24	12.65	3.28	12.38	3.33	12.26	3.35	11.94	3.40	11.76	3.43
							7	14.17	3.35	13.86	3.40	13.59	3.44	13.50	3.46	13.12	3.52	12.93	3.55
							10	15.40	3.46	15.09	3.51	14.80	3.56	14.67	3.58	14.31	3.64	14.11	3.68
							15	16.94	3.60	16.61	3.65	16.31	3.70	16.17	3.73	15.80	3.79	15.58	3.82
2000	2000	3500	3500	3500	14500	104%	-15	7.73	2.75	7.49	2.79	7.27	2.83	7.17	2.84	6.92	2.89	6.79	2.91
							-10	9.26	2.89	9.00	2.94	8.77	2.98	8.67	2.99	8.39	3.04	8.25	3.07
							-5	10.79	3.04	10.52	3.08	10.27	3.12	10.16	3.14	9.87	3.19	9.71	3.22
							0	12.32	3.18	12.04	3.23	11.78	3.27	11.66	3.29	11.35	3.34	11.17	3.37
							2	12.94	3.24	12.65	3.28	12.38	3.33	12.26	3.35	11.94	3.40	11.76	3.43
							7	14.17	3.35	13.86	3.40	13.59	3.44	13.50	3.46	13.12	3.52	12.93	3.55
							10	15.40	3.46	15.09	3.51	14.80	3.56	14.67	3.58	14.31	3.64	14.11	3.68
							15	16.94	3.60	16.61	3.65	16.31	3.70	16.17	3.73	15.80	3.79	15.58	3.82
2000	2000	3500	3500	5000	16000	114%	-15	8.59	3.40	8.32	3.45	8.08	3.50	7.97	3.52	7.69	3.57	7.54	3.60
							-10	10.29	3.58	10.00	3.63	9.75	3.68	9.63	3.70	9.33	3.76	9.16	3.79
							-5	11.99	3.76	11.69	3.81	11.42	3.86	11.29	3.89	10.97	3.95	10.79	3.98
							0	13.69	3.93	13.38	3.99	13.09	4.04	12.96	4.07	12.61	4.13	12.41	4.17
							2	14.37	4.00	14.05	4.06	13.76	4.12	13.62	4.14	13.27	4.21	13.06	4.25
							7	15.74	4.14	15.41	4.20	15.10	4.26	15.00	4.28	14.58	4.36	14.37	4.40
							10	17.11	4.28	16.76	4.34	16.44	4.40	16.30	4.43	15.90	4.50	15.67	4.55
							15	18.82	4.45	18.46	4.52	18.13	4.58	17.97	4.61	17.55	4.69	17.31	4.73
2000	2000	3500	5000	5000	17500	125%	-15	7.73	2.75	7.49	2.79	7.27	2.83	7.17	2.84	6.92	2.89	6.79	2.91
							-10	9.26	2.89	9.00	2.94	8.77	2.98	8.67	2.99	8.39	3.04	8.25	3.07
							-5	10.79	3.04	10.52	3.08	10.27	3.12	10.16	3.14	9.87	3.19	9.71	3.22
							0	12.32	3.18	12.04	3.23	11.78	3.27	11.66	3.29	11.35	3.34	11.17	3.37
							2	12.94	3.24	12.65	3.28	12.38	3.33	12.26	3.35	11.94	3.40	11.76	3.43
							7	14.17	3.35	13.86	3.40	13.59	3.44	13.50	3.46	13.12	3.52	12.93	3.55
							10	15.40	3.46	15.09	3.51	14.80	3.56	14.67	3.58	14.31	3.64	14.11	3.68
							15	16.94	3.60	16.61	3.65	16.31	3.70	16.17	3.73	15.80	3.79	15.58	3.82
2000	2500	2500	2500	2500	12000	86%	-15	7.73	2.75	7.49	2.79	7.27	2.83	7.17	2.84	6.92	2.89	6.79	2.91
							-10	9.26	2.89	9.00	2.94	8.77	2.98	8.67	2.99	8.39	3.04	8.25	3.07
							-5	10.79	3.04	10.52	3.08	10.27	3.12	10.16	3.14	9.87	3.19	9.71	3.22
							0	12.32	3.18	12.04	3.23	11.78	3.27	11.66	3.29	11.35	3.34	11.17	3.37
							2	12.94	3.24	12.65	3.28	12.38	3.33	12.26	3.35	11.94	3.40	11.76	3.43
							7	14.17	3.35	13.86	3.40	13.59	3.44	13.50	3.46	13.12	3.52	12.93	3.55
							10	15.40	3.46	15.09	3.51	14.80	3.56	14.67	3.58	14.31	3.64	14.11	3.68
							15	16.94	3.60	16.61	3.65	16.31	3.70	16.17	3.73	15.80	3.79	15.58	3.82
2000	2500	2500	2500	3500	13000	93%	-15	7.73	2.75	7.49	2.79	7.27	2.83	7.17	2.84	6.92	2.89	6.79	2.91
							-10	9.26	2.89	9.00	2.94	8.77	2.98	8.67	2.99	8.39	3.04	8.25	3.07
							-5	10.79	3.04	10.52	3.08	10.27	3.12	10.16	3.14	9.87	3.19	9.71	3.22
							0	12.32	3.18	12.04	3.23	11.78	3.27	11.66	3.29	11.35	3.34	11.17	3.37
							2	12.94	3.24	12.65	3.28	12.38	3.33	12.26	3.35	11.94	3.40	11.76	3.43
							7	14.17	3.35	13.86	3.40	13.59	3.44	13.50	3.46	13.12	3.52	12.93	3.55
							10	15.40	3.46	15.09	3.51	14.80	3.56	14.67	3.58	14.31	3.64	14.11	3.68
							15	16.94	3.60	16.61	3.65	16.31	3.70	16.17	3.73	15.80	3.79	15.58	3.82

12. Capacity Table

12-6. AJ125TXJ5KH/EA

HEATING

Combination (Capacity Index)					Combination (Total)	Combination (%)	Outdoor Temperature (°F,DB)	Indoor Temperature (°F, DB)											
								57.2		60.8		64.4		69.98		71.6		75.2	
								TC(kbtu)	PI(kW)	TC(kbtu)	PI(kW)	TC(kbtu)	PI(kW)	TC(kbtu)	PI(kW)	TC(kbtu)	PI(kW)	TC(kbtu)	PI(kW)
2000	2500	2500	2500	5000	14500	104%	-15	7.73	2.75	7.49	2.79	7.27	2.83	7.17	2.84	6.92	2.89	6.79	2.91
							-10	9.26	2.89	9.00	2.94	8.77	2.98	8.67	2.99	8.39	3.04	8.25	3.07
							-5	10.79	3.04	10.52	3.08	10.27	3.12	10.16	3.14	9.87	3.19	9.71	3.22
							0	12.32	3.18	12.04	3.23	11.78	3.27	11.66	3.29	11.35	3.34	11.17	3.37
							2	12.94	3.24	12.65	3.28	12.38	3.33	12.26	3.35	11.94	3.40	11.76	3.43
							7	14.17	3.35	13.86	3.40	13.59	3.44	13.50	3.46	13.12	3.52	12.93	3.55
							10	15.40	3.46	15.09	3.51	14.80	3.56	14.67	3.58	14.31	3.64	14.11	3.68
							15	16.94	3.60	16.61	3.65	16.31	3.70	16.17	3.73	15.80	3.79	15.58	3.82
2000	2500	2500	2500	6800	16300	116%	-15	7.73	2.75	7.49	2.79	7.27	2.83	7.17	2.84	6.92	2.89	6.79	2.91
							-10	9.26	2.89	9.00	2.94	8.77	2.98	8.67	2.99	8.39	3.04	8.25	3.07
							-5	10.79	3.04	10.52	3.08	10.27	3.12	10.16	3.14	9.87	3.19	9.71	3.22
							0	12.32	3.18	12.04	3.23	11.78	3.27	11.66	3.29	11.35	3.34	11.17	3.37
							2	12.94	3.24	12.65	3.28	12.38	3.33	12.26	3.35	11.94	3.40	11.76	3.43
							7	14.17	3.35	13.86	3.40	13.59	3.44	13.50	3.46	13.12	3.52	12.93	3.55
							10	15.40	3.46	15.09	3.51	14.80	3.56	14.67	3.58	14.31	3.64	14.11	3.68
							15	16.94	3.60	16.61	3.65	16.31	3.70	16.17	3.73	15.80	3.79	15.58	3.82
2000	2500	2500	3500	3500	14000	100%	-15	7.73	2.75	7.49	2.79	7.27	2.83	7.17	2.84	6.92	2.89	6.79	2.91
							-10	9.26	2.89	9.00	2.94	8.77	2.98	8.67	2.99	8.39	3.04	8.25	3.07
							-5	10.79	3.04	10.52	3.08	10.27	3.12	10.16	3.14	9.87	3.19	9.71	3.22
							0	12.32	3.18	12.04	3.23	11.78	3.27	11.66	3.29	11.35	3.34	11.17	3.37
							2	12.94	3.24	12.65	3.28	12.38	3.33	12.26	3.35	11.94	3.40	11.76	3.43
							7	14.17	3.35	13.86	3.40	13.59	3.44	13.50	3.46	13.12	3.52	12.93	3.55
							10	15.40	3.46	15.09	3.51	14.80	3.56	14.67	3.58	14.31	3.64	14.11	3.68
							15	16.94	3.60	16.61	3.65	16.31	3.70	16.17	3.73	15.80	3.79	15.58	3.82
2000	2500	2500	3500	5000	15500	111%	-15	7.73	2.75	7.49	2.79	7.27	2.83	7.17	2.84	6.92	2.89	6.79	2.91
							-10	9.26	2.89	9.00	2.94	8.77	2.98	8.67	2.99	8.39	3.04	8.25	3.07
							-5	10.79	3.04	10.52	3.08	10.27	3.12	10.16	3.14	9.87	3.19	9.71	3.22
							0	12.32	3.18	12.04	3.23	11.78	3.27	11.66	3.29	11.35	3.34	11.17	3.37
							2	12.94	3.24	12.65	3.28	12.38	3.33	12.26	3.35	11.94	3.40	11.76	3.43
							7	14.17	3.35	13.86	3.40	13.59	3.44	13.50	3.46	13.12	3.52	12.93	3.55
							10	15.40	3.46	15.09	3.51	14.80	3.56	14.67	3.58	14.31	3.64	14.11	3.68
							15	16.94	3.60	16.61	3.65	16.31	3.70	16.17	3.73	15.80	3.79	15.58	3.82
2000	2500	2500	3500	6800	17300	124%	-15	7.73	2.75	7.49	2.79	7.27	2.83	7.17	2.84	6.92	2.89	6.79	2.91
							-10	9.26	2.89	9.00	2.94	8.77	2.98	8.67	2.99	8.39	3.04	8.25	3.07
							-5	10.79	3.04	10.52	3.08	10.27	3.12	10.16	3.14	9.87	3.19	9.71	3.22
							0	12.32	3.18	12.04	3.23	11.78	3.27	11.66	3.29	11.35	3.34	11.17	3.37
							2	12.94	3.24	12.65	3.28	12.38	3.33	12.26	3.35	11.94	3.40	11.76	3.43
							7	14.17	3.35	13.86	3.40	13.59	3.44	13.50	3.46	13.12	3.52	12.93	3.55
							10	15.40	3.46	15.09	3.51	14.80	3.56	14.67	3.58	14.31	3.64	14.11	3.68
							15	16.94	3.60	16.61	3.65	16.31	3.70	16.17	3.73	15.80	3.79	15.58	3.82
2000	2500	2500	5000	5000	17000	121%	-15	7.73	2.75	7.49	2.79	7.27	2.83	7.17	2.84	6.92	2.89	6.79	2.91
							-10	9.26	2.89	9.00	2.94	8.77	2.98	8.67	2.99	8.39	3.04	8.25	3.07
							-5	10.79	3.04	10.52	3.08	10.27	3.12	10.16	3.14	9.87	3.19	9.71	3.22
							0	12.32	3.18	12.04	3.23	11.78	3.27	11.66	3.29	11.35	3.34	11.17	3.37
							2	12.94	3.24	12.65	3.28	12.38	3.33	12.26	3.35	11.94	3.40	11.76	3.43
							7	14.17	3.35	13.86	3.40	13.59	3.44	13.50	3.46	13.12	3.52	12.93	3.55
							10	15.40	3.46	15.09	3.51	14.80	3.56	14.67	3.58	14.31	3.64	14.11	3.68
							15	16.94	3.60	16.61	3.65	16.31	3.70	16.17	3.73	15.80	3.79	15.58	3.82

12. Capacity Table

12-6. AJ125TXJ5KH/EA

HEATING

Combination (Capacity Index)					Combination (Total)	Combination (%)	Outdoor Temperature (°F,DB)	Indoor Temperature (°F, DB)											
								57.2		60.8		64.4		69.98		71.6		75.2	
								TC(kbtu)	PI(kW)	TC(kbtu)	PI(kW)	TC(kbtu)	PI(kW)	TC(kbtu)	PI(kW)	TC(kbtu)	PI(kW)	TC(kbtu)	PI(kW)
2000	2500	3500	3500	3500	15000	107%	-15	7.73	2.75	7.49	2.79	7.27	2.83	7.17	2.84	6.92	2.89	6.79	2.91
							-10	9.26	2.89	9.00	2.94	8.77	2.98	8.67	2.99	8.39	3.04	8.25	3.07
							-5	10.79	3.04	10.52	3.08	10.27	3.12	10.16	3.14	9.87	3.19	9.71	3.22
							0	12.32	3.18	12.04	3.23	11.78	3.27	11.66	3.29	11.35	3.34	11.17	3.37
							2	12.94	3.24	12.65	3.28	12.38	3.33	12.26	3.35	11.94	3.40	11.76	3.43
							7	14.17	3.35	13.86	3.40	13.59	3.44	13.50	3.46	13.12	3.52	12.93	3.55
							10	15.40	3.46	15.09	3.51	14.80	3.56	14.67	3.58	14.31	3.64	14.11	3.68
							15	16.94	3.60	16.61	3.65	16.31	3.70	16.17	3.73	15.80	3.79	15.58	3.82
2000	2500	3500	3500	5000	16500	118%	-15	7.73	2.75	7.49	2.79	7.27	2.83	7.17	2.84	6.92	2.89	6.79	2.91
							-10	9.26	2.89	9.00	2.94	8.77	2.98	8.67	2.99	8.39	3.04	8.25	3.07
							-5	10.79	3.04	10.52	3.08	10.27	3.12	10.16	3.14	9.87	3.19	9.71	3.22
							0	12.32	3.18	12.04	3.23	11.78	3.27	11.66	3.29	11.35	3.34	11.17	3.37
							2	12.94	3.24	12.65	3.28	12.38	3.33	12.26	3.35	11.94	3.40	11.76	3.43
							7	14.17	3.35	13.86	3.40	13.59	3.44	13.50	3.46	13.12	3.52	12.93	3.55
							10	15.40	3.46	15.09	3.51	14.80	3.56	14.67	3.58	14.31	3.64	14.11	3.68
							15	16.94	3.60	16.61	3.65	16.31	3.70	16.17	3.73	15.80	3.79	15.58	3.82
2000	3500	3500	3500	3500	16000	114%	-15	7.73	2.75	7.49	2.79	7.27	2.83	7.17	2.84	6.92	2.89	6.79	2.91
							-10	9.26	2.89	9.00	2.94	8.77	2.98	8.67	2.99	8.39	3.04	8.25	3.07
							-5	10.79	3.04	10.52	3.08	10.27	3.12	10.16	3.14	9.87	3.19	9.71	3.22
							0	12.32	3.18	12.04	3.23	11.78	3.27	11.66	3.29	11.35	3.34	11.17	3.37
							2	12.94	3.24	12.65	3.28	12.38	3.33	12.26	3.35	11.94	3.40	11.76	3.43
							7	14.17	3.35	13.86	3.40	13.59	3.44	13.50	3.46	13.12	3.52	12.93	3.55
							10	15.40	3.46	15.09	3.51	14.80	3.56	14.67	3.58	14.31	3.64	14.11	3.68
							15	16.94	3.60	16.61	3.65	16.31	3.70	16.17	3.73	15.80	3.79	15.58	3.82
2000	3500	3500	3500	5000	17500	125%	-15	7.73	2.75	7.49	2.79	7.27	2.83	7.17	2.84	6.92	2.89	6.79	2.91
							-10	9.26	2.89	9.00	2.94	8.77	2.98	8.67	2.99	8.39	3.04	8.25	3.07
							-5	10.79	3.04	10.52	3.08	10.27	3.12	10.16	3.14	9.87	3.19	9.71	3.22
							0	12.32	3.18	12.04	3.23	11.78	3.27	11.66	3.29	11.35	3.34	11.17	3.37
							2	12.94	3.24	12.65	3.28	12.38	3.33	12.26	3.35	11.94	3.40	11.76	3.43
							7	14.17	3.35	13.86	3.40	13.59	3.44	13.50	3.46	13.12	3.52	12.93	3.55
							10	15.40	3.46	15.09	3.51	14.80	3.56	14.67	3.58	14.31	3.64	14.11	3.68
							15	16.94	3.60	16.61	3.65	16.31	3.70	16.17	3.73	15.80	3.79	15.58	3.82
2500	2500	2500	2500	2500	12500	89%	-15	7.73	2.75	7.49	2.79	7.27	2.83	7.17	2.84	6.92	2.89	6.79	2.91
							-10	9.26	2.89	9.00	2.94	8.77	2.98	8.67	2.99	8.39	3.04	8.25	3.07
							-5	10.79	3.04	10.52	3.08	10.27	3.12	10.16	3.14	9.87	3.19	9.71	3.22
							0	12.32	3.18	12.04	3.23	11.78	3.27	11.66	3.29	11.35	3.34	11.17	3.37
							2	12.94	3.24	12.65	3.28	12.38	3.33	12.26	3.35	11.94	3.40	11.76	3.43
							7	14.17	3.35	13.86	3.40	13.59	3.44	13.50	3.46	13.12	3.52	12.93	3.55
							10	15.40	3.46	15.09	3.51	14.80	3.56	14.67	3.58	14.31	3.64	14.11	3.68
							15	16.94	3.60	16.61	3.65	16.31	3.70	16.17	3.73	15.80	3.79	15.58	3.82
2500	2500	2500	2500	3500	13500	96%	-15	7.73	2.75	7.49	2.79	7.27	2.83	7.17	2.84	6.92	2.89	6.79	2.91
							-10	9.26	2.89	9.00	2.94	8.77	2.98	8.67	2.99	8.39	3.04	8.25	3.07
							-5	10.79	3.04	10.52	3.08	10.27	3.12	10.16	3.14	9.87	3.19	9.71	3.22
							0	12.32	3.18	12.04	3.23	11.78	3.27	11.66	3.29	11.35	3.34	11.17	3.37
							2	12.94	3.24	12.65	3.28	12.38	3.33	12.26	3.35	11.94	3.40	11.76	3.43
							7	14.17	3.35	13.86	3.40	13.59	3.44	13.50	3.46	13.12	3.52	12.93	3.55
							10	15.40	3.46	15.09	3.51	14.80	3.56	14.67	3.58	14.31	3.64	14.11	3.68
							15	16.94	3.60	16.61	3.65	16.31	3.70	16.17	3.73	15.80	3.79	15.58	3.82

12. Capacity Table

12-6. AJ125TXJ5KH/EA

HEATING

Combination (Capacity Index)					Combination (Total)	Combination (%)	Outdoor Temperature (°F,DB)	Indoor Temperature (°F, DB)											
								57.2		60.8		64.4		69.98		71.6		75.2	
								TC(kbtu)	PI(kW)	TC(kbtu)	PI(kW)	TC(kbtu)	PI(kW)	TC(kbtu)	PI(kW)	TC(kbtu)	PI(kW)	TC(kbtu)	PI(kW)
2500	2500	2500	2500	5000	15000	107%	-15	7.73	2.75	7.49	2.79	7.27	2.83	7.17	2.84	6.92	2.89	6.79	2.91
							-10	9.26	2.89	9.00	2.94	8.77	2.98	8.67	2.99	8.39	3.04	8.25	3.07
							-5	10.79	3.04	10.52	3.08	10.27	3.12	10.16	3.14	9.87	3.19	9.71	3.22
							0	12.32	3.18	12.04	3.23	11.78	3.27	11.66	3.29	11.35	3.34	11.17	3.37
							2	12.94	3.24	12.65	3.28	12.38	3.33	12.26	3.35	11.94	3.40	11.76	3.43
							7	14.17	3.35	13.86	3.40	13.59	3.44	13.50	3.46	13.12	3.52	12.93	3.55
							10	15.40	3.46	15.09	3.51	14.80	3.56	14.67	3.58	14.31	3.64	14.11	3.68
							15	16.94	3.60	16.61	3.65	16.31	3.70	16.17	3.73	15.80	3.79	15.58	3.82
2500	2500	2500	2500	6800	16800	120%	-15	7.73	2.75	7.49	2.79	7.27	2.83	7.17	2.84	6.92	2.89	6.79	2.91
							-10	9.26	2.89	9.00	2.94	8.77	2.98	8.67	2.99	8.39	3.04	8.25	3.07
							-5	10.79	3.04	10.52	3.08	10.27	3.12	10.16	3.14	9.87	3.19	9.71	3.22
							0	12.32	3.18	12.04	3.23	11.78	3.27	11.66	3.29	11.35	3.34	11.17	3.37
							2	12.94	3.24	12.65	3.28	12.38	3.33	12.26	3.35	11.94	3.40	11.76	3.43
							7	14.17	3.35	13.86	3.40	13.59	3.44	13.50	3.46	13.12	3.52	12.93	3.55
							10	15.40	3.46	15.09	3.51	14.80	3.56	14.67	3.58	14.31	3.64	14.11	3.68
							15	16.94	3.60	16.61	3.65	16.31	3.70	16.17	3.73	15.80	3.79	15.58	3.82
2500	2500	2500	3500	3500	14500	104%	-15	7.73	2.75	7.49	2.79	7.27	2.83	7.17	2.84	6.92	2.89	6.79	2.91
							-10	9.26	2.89	9.00	2.94	8.77	2.98	8.67	2.99	8.39	3.04	8.25	3.07
							-5	10.79	3.04	10.52	3.08	10.27	3.12	10.16	3.14	9.87	3.19	9.71	3.22
							0	12.32	3.18	12.04	3.23	11.78	3.27	11.66	3.29	11.35	3.34	11.17	3.37
							2	12.94	3.24	12.65	3.28	12.38	3.33	12.26	3.35	11.94	3.40	11.76	3.43
							7	14.17	3.35	13.86	3.40	13.59	3.44	13.50	3.46	13.12	3.52	12.93	3.55
							10	15.40	3.46	15.09	3.51	14.80	3.56	14.67	3.58	14.31	3.64	14.11	3.68
							15	16.94	3.60	16.61	3.65	16.31	3.70	16.17	3.73	15.80	3.79	15.58	3.82
2500	2500	2500	3500	5000	16000	114%	-15	7.73	2.75	7.49	2.79	7.27	2.83	7.17	2.84	6.92	2.89	6.79	2.91
							-10	9.26	2.89	9.00	2.94	8.77	2.98	8.67	2.99	8.39	3.04	8.25	3.07
							-5	10.79	3.04	10.52	3.08	10.27	3.12	10.16	3.14	9.87	3.19	9.71	3.22
							0	12.32	3.18	12.04	3.23	11.78	3.27	11.66	3.29	11.35	3.34	11.17	3.37
							2	12.94	3.24	12.65	3.28	12.38	3.33	12.26	3.35	11.94	3.40	11.76	3.43
							7	14.17	3.35	13.86	3.40	13.59	3.44	13.50	3.46	13.12	3.52	12.93	3.55
							10	15.40	3.46	15.09	3.51	14.80	3.56	14.67	3.58	14.31	3.64	14.11	3.68
							15	16.94	3.60	16.61	3.65	16.31	3.70	16.17	3.73	15.80	3.79	15.58	3.82
2500	2500	2500	5000	5000	17500	125%	-15	7.73	2.75	7.49	2.79	7.27	2.83	7.17	2.84	6.92	2.89	6.79	2.91
							-10	9.26	2.89	9.00	2.94	8.77	2.98	8.67	2.99	8.39	3.04	8.25	3.07
							-5	10.79	3.04	10.52	3.08	10.27	3.12	10.16	3.14	9.87	3.19	9.71	3.22
							0	12.32	3.18	12.04	3.23	11.78	3.27	11.66	3.29	11.35	3.34	11.17	3.37
							2	12.94	3.24	12.65	3.28	12.38	3.33	12.26	3.35	11.94	3.40	11.76	3.43
							7	14.17	3.35	13.86	3.40	13.59	3.44	13.50	3.46	13.12	3.52	12.93	3.55
							10	15.40	3.46	15.09	3.51	14.80	3.56	14.67	3.58	14.31	3.64	14.11	3.68
							15	16.94	3.60	16.61	3.65	16.31	3.70	16.17	3.73	15.80	3.79	15.58	3.82
2500	2500	3500	3500	3500	15500	111%	-15	7.73	2.75	7.49	2.79	7.27	2.83	7.17	2.84	6.92	2.89	6.79	2.91
							-10	9.26	2.89	9.00	2.94	8.77	2.98	8.67	2.99	8.39	3.04	8.25	3.07
							-5	10.79	3.04	10.52	3.08	10.27	3.12	10.16	3.14	9.87	3.19	9.71	3.22
							0	12.32	3.18	12.04	3.23	11.78	3.27	11.66	3.29	11.35	3.34	11.17	3.37
							2	12.94	3.24	12.65	3.28	12.38	3.33	12.26	3.35	11.94	3.40	11.76	3.43
							7	14.17	3.35	13.86	3.40	13.59	3.44	13.50	3.46	13.12	3.52	12.93	3.55
							10	15.40	3.46	15.09	3.51	14.80	3.56	14.67	3.58	14.31	3.64	14.11	3.68
							15	16.94	3.60	16.61	3.65	16.31	3.70	16.17	3.73	15.80	3.79	15.58	3.82

12. Capacity Table

12-6. AJ125TXJ5KH/EA

HEATING

Combination (Capacity Index)					Combination (Total)	Combination (%)	Outdoor Temperature (°F,DB)	Indoor Temperature (°F, DB)											
								57.2		60.8		64.4		69.98		71.6		75.2	
								TC(kbtu)	PI(kW)	TC(kbtu)	PI(kW)	TC(kbtu)	PI(kW)	TC(kbtu)	PI(kW)	TC(kbtu)	PI(kW)	TC(kbtu)	PI(kW)
2500	2500	3500	3500	5000	17000	121%	-15	7.73	2.75	7.49	2.79	7.27	2.83	7.17	2.84	6.92	2.89	6.79	2.91
							-10	9.26	2.89	9.00	2.94	8.77	2.98	8.67	2.99	8.39	3.04	8.25	3.07
							-5	10.79	3.04	10.52	3.08	10.27	3.12	10.16	3.14	9.87	3.19	9.71	3.22
							0	12.32	3.18	12.04	3.23	11.78	3.27	11.66	3.29	11.35	3.34	11.17	3.37
							2	12.94	3.24	12.65	3.28	12.38	3.33	12.26	3.35	11.94	3.40	11.76	3.43
							7	14.17	3.35	13.86	3.40	13.59	3.44	13.50	3.46	13.12	3.52	12.93	3.55
							10	15.40	3.46	15.09	3.51	14.80	3.56	14.67	3.58	14.31	3.64	14.11	3.68
							15	16.94	3.60	16.61	3.65	16.31	3.70	16.17	3.73	15.80	3.79	15.58	3.82
2500	3500	3500	3500	3500	16500	118%	-15	7.73	2.75	7.49	2.79	7.27	2.83	7.17	2.84	6.92	2.89	6.79	2.91
							-10	9.26	2.89	9.00	2.94	8.77	2.98	8.67	2.99	8.39	3.04	8.25	3.07
							-5	10.79	3.04	10.52	3.08	10.27	3.12	10.16	3.14	9.87	3.19	9.71	3.22
							0	12.32	3.18	12.04	3.23	11.78	3.27	11.66	3.29	11.35	3.34	11.17	3.37
							2	12.94	3.24	12.65	3.28	12.38	3.33	12.26	3.35	11.94	3.40	11.76	3.43
							7	14.17	3.35	13.86	3.40	13.59	3.44	13.50	3.46	13.12	3.52	12.93	3.55
							10	15.40	3.46	15.09	3.51	14.80	3.56	14.67	3.58	14.31	3.64	14.11	3.68
							15	16.94	3.60	16.61	3.65	16.31	3.70	16.17	3.73	15.80	3.79	15.58	3.82
3500	3500	3500	3500	3500	17500	125%	-15	7.73	2.75	7.49	2.79	7.27	2.83	7.17	2.84	6.92	2.89	6.79	2.91
							-10	9.26	2.89	9.00	2.94	8.77	2.98	8.67	2.99	8.39	3.04	8.25	3.07
							-5	10.79	3.04	10.52	3.08	10.27	3.12	10.16	3.14	9.87	3.19	9.71	3.22
							0	12.32	3.18	12.04	3.23	11.78	3.27	11.66	3.29	11.35	3.34	11.17	3.37
							2	12.94	3.24	12.65	3.28	12.38	3.33	12.26	3.35	11.94	3.40	11.76	3.43
							7	14.17	3.35	13.86	3.40	13.59	3.44	13.50	3.46	13.12	3.52	12.93	3.55
							10	15.40	3.46	15.09	3.51	14.80	3.56	14.67	3.58	14.31	3.64	14.11	3.68
							15	16.94	3.60	16.61	3.65	16.31	3.70	16.17	3.73	15.80	3.79	15.58	3.82

NOTE

1. Cooling capacity is based on 27°CDB / 19°CWB (indoor temperature), 35°CDB (outdoor temperature).
2. Heating capacity is based on 20°CDB (indoor temperature), 7°CDB/6°CWB (outdoor temperature).
3. The above is the value for connecting with the following indoor units.
   - AJ***TNAPKH : Premium Wind Free
4. Capacities are based on the following conditions:
   - Corresponding refrigerant piping length : 7.5m / - Level difference : 0m
5. The total ability of connected a indoor unit is up to 17.5kW
6. It is impossible to connect the indoor unit for one room only.
7. This data is reference data for temperature capacity trend.

12. Capacity Table

12-7. AJ140TXJ5KH/EA

COOLING

Combination (Capacity Index)					Combination (Total)	Combination (%)	Outdoor Temperature (°C,DB)	Indoor Temperature(°C, WB)													
								14		16		18		19		20		22		24	
								TC(kW)	PI(kW)	TC(kW)	PI(kW)	TC(kW)	PI(kW)	TC(kW)	PI(kW)	TC(kW)	PI(kW)	TC(kW)	PI(kW)	TC(kW)	PI(kW)
							10	1.60	0.42	2.32	0.47	2.42	0.51	2.46	0.53	2.51	0.54	2.61	0.57	2.71	0.59
							12	1.60	0.44	2.28	0.49	2.38	0.53	2.43	0.54	2.48	0.56	2.57	0.58	2.67	0.60
							14	1.60	0.46	2.24	0.51	2.34	0.54	2.39	0.56	2.44	0.57	2.53	0.60	2.63	0.61
							16	1.60	0.48	2.21	0.52	2.30	0.56	2.35	0.57	2.40	0.59	2.50	0.61	2.59	0.63
							18	1.60	0.50	2.17	0.54	2.27	0.58	2.31	0.59	2.36	0.60	2.46	0.62	2.55	0.64
							20	1.60	0.52	2.13	0.56	2.23	0.59	2.28	0.61	2.32	0.62	2.42	0.64	2.52	0.65
							21	1.60	0.53	2.12	0.57	2.21	0.60	2.26	0.62	2.30	0.63	2.40	0.65	2.50	0.66
							23	1.60	0.55	2.08	0.59	2.17	0.62	2.22	0.63	2.27	0.64	2.36	0.66	2.46	0.67
							25	1.60	0.57	2.04	0.61	2.14	0.64	2.18	0.65	2.23	0.66	2.32	0.67	2.42	0.68
2000					2000	14%	27	1.60	0.59	2.01	0.63	2.10	0.66	2.15	0.67	2.19	0.68	2.29	0.69	2.38	0.70
							29	1.60	0.62	1.97	0.65	2.06	0.67	2.11	0.68	2.16	0.69	2.25	0.71	2.34	0.71
							31	1.60	0.64	1.94	0.67	2.03	0.69	2.07	0.70	2.12	0.71	2.21	0.72	2.30	0.72
							33	1.60	0.66	1.90	0.69	1.99	0.71	2.04	0.72	2.08	0.73	2.17	0.74	2.27	0.74
							35	1.60	0.68	1.86	0.71	1.95	0.73	2.00	0.73	2.04	0.75	2.14	0.75	2.23	0.75
							37	1.60	0.71	1.83	0.73	1.92	0.75	1.96	0.76	2.01	0.76	2.10	0.77	2.19	0.77
							39	1.60	0.73	1.79	0.75	1.88	0.77	1.93	0.78	1.97	0.78	2.06	0.79	2.15	0.78
							42	1.58	0.76	1.74	0.79	1.83	0.80	1.87	0.81	1.92	0.81	2.01	0.81	2.10	0.81
							44	1.50	0.79	1.71	0.81	1.79	0.82	1.84	0.83	1.88	0.83	1.97	0.83	2.06	0.82
							46	1.46	0.81	1.67	0.83	1.76	0.84	1.80	0.85	1.84	0.85	1.93	0.85	2.02	0.84
							10	2.00	0.52	2.90	0.57	3.02	0.62	3.08	0.64	3.14	0.66	3.26	0.70	3.39	0.72
							12	2.00	0.54	2.85	0.59	2.97	0.64	3.03	0.66	3.09	0.68	3.22	0.71	3.34	0.73
							14	2.00	0.56	2.80	0.62	2.93	0.66	2.99	0.68	3.05	0.70	3.17	0.73	3.29	0.75
							16	2.00	0.59	2.76	0.64	2.88	0.68	2.94	0.70	3.00	0.72	3.12	0.74	3.24	0.76
							18	2.00	0.61	2.71	0.66	2.83	0.70	2.89	0.72	2.95	0.74	3.07	0.76	3.19	0.78
							20	2.00	0.64	2.67	0.68	2.79	0.72	2.85	0.74	2.90	0.76	3.02	0.78	3.14	0.79
							21	2.00	0.65	2.64	0.70	2.76	0.73	2.82	0.75	2.88	0.76	3.00	0.79	3.12	0.80
							23	2.00	0.67	2.60	0.72	2.72	0.76	2.78	0.77	2.83	0.78	2.95	0.80	3.07	0.82
							25	2.00	0.70	2.55	0.74	2.67	0.78	2.73	0.79	2.79	0.80	2.91	0.82	3.02	0.83
2500					2500	18%	27	2.00	0.72	2.51	0.77	2.62	0.80	2.68	0.81	2.74	0.82	2.86	0.84	2.98	0.85
							29	2.00	0.75	2.46	0.79	2.58	0.82	2.64	0.83	2.69	0.85	2.81	0.86	2.93	0.87
							31	2.00	0.78	2.42	0.82	2.53	0.85	2.59	0.86	2.65	0.87	2.76	0.88	2.88	0.88
							33	2.00	0.81	2.37	0.84	2.49	0.87	2.54	0.88	2.60	0.89	2.72	0.90	2.83	0.90
							35	2.00	0.83	2.33	0.87	2.44	0.89	2.50	0.89	2.56	0.91	2.67	0.92	2.78	0.92
							37	2.00	0.86	2.29	0.89	2.40	0.92	2.45	0.93	2.51	0.93	2.62	0.94	2.74	0.94
							39	2.00	0.89	2.24	0.92	2.35	0.94	2.41	0.95	2.46	0.95	2.58	0.96	2.69	0.96
							42	1.98	0.93	2.18	0.96	2.29	0.98	2.34	0.98	2.40	0.99	2.51	0.99	2.62	0.98
							44	1.88	0.96	2.13	0.99	2.24	1.00	2.30	1.01	2.35	1.01	2.46	1.01	2.57	1.00
							46	1.83	0.99	2.09	1.01	2.20	1.03	2.25	1.03	2.30	1.04	2.41	1.03	2.53	1.02

12. Capacity Table

12-7. AJ140TXJ5KH/EA

COOLING

Combination (Capacity Index)					Combination (Total)	Combination (%)	Outdoor Temperature (°C,DB)	Indoor Temperature(°C, WB)													
								14		16		18		19		20		22		24	
								TC(kW)	PI(kW)	TC(kW)	PI(kW)	TC(kW)	PI(kW)	TC(kW)	PI(kW)	TC(kW)	PI(kW)	TC(kW)	PI(kW)	TC(kW)	PI(kW)
3500					3500	25%	10	2.80	0.67	4.06	0.75	4.23	0.81	4.31	0.84	4.40	0.87	4.57	0.91	4.74	0.94
							12	2.80	0.70	3.99	0.77	4.16	0.84	4.25	0.86	4.33	0.89	4.50	0.93	4.68	0.96
							14	2.80	0.73	3.93	0.80	4.10	0.86	4.18	0.89	4.26	0.91	4.44	0.95	4.61	0.98
							16	2.80	0.76	3.86	0.83	4.03	0.89	4.11	0.91	4.20	0.94	4.37	0.97	4.54	0.99
							18	2.80	0.80	3.80	0.86	3.96	0.92	4.05	0.94	4.13	0.96	4.30	0.99	4.47	1.01
							20	2.80	0.83	3.73	0.89	3.90	0.94	3.98	0.97	4.07	0.98	4.23	1.01	4.40	1.03
							21	2.80	0.84	3.70	0.91	3.87	0.96	3.95	0.98	4.03	1.00	4.20	1.03	4.37	1.04
							23	2.80	0.88	3.64	0.94	3.80	0.99	3.89	1.01	3.97	1.02	4.13	1.05	4.30	1.06
							25	2.80	0.91	3.58	0.97	3.74	1.01	3.82	1.03	3.90	1.05	4.07	1.07	4.23	1.08
							27	2.80	0.94	3.51	1.00	3.67	1.04	3.76	1.06	3.84	1.07	4.00	1.10	4.17	1.11
							29	2.80	0.98	3.45	1.03	3.61	1.07	3.69	1.09	3.77	1.10	3.93	1.12	4.10	1.13
							31	2.80	1.01	3.39	1.06	3.55	1.10	3.63	1.12	3.71	1.13	3.87	1.15	4.03	1.15
							33	2.80	1.05	3.32	1.10	3.48	1.13	3.56	1.15	3.64	1.16	3.80	1.17	3.97	1.17
							35	2.80	1.09	3.26	1.13	3.42	1.16	3.50	1.16	3.58	1.19	3.74	1.20	3.90	1.20
							37	2.80	1.12	3.20	1.16	3.36	1.19	3.43	1.21	3.51	1.21	3.67	1.22	3.83	1.22
							39	2.80	1.16	3.14	1.20	3.29	1.23	3.37	1.24	3.45	1.24	3.61	1.25	3.77	1.25
							42	2.77	1.21	3.05	1.25	3.20	1.27	3.28	1.28	3.35	1.29	3.51	1.29	3.67	1.28
							44	2.63	1.25	2.98	1.29	3.14	1.31	3.21	1.31	3.29	1.32	3.45	1.32	3.60	1.31
							46	2.56	1.29	2.92	1.32	3.07	1.34	3.15	1.35	3.23	1.35	3.38	1.35	3.54	1.33
5000					5000	36%	10	4.00	0.97	5.79	1.08	6.04	1.17	6.16	1.21	6.28	1.25	6.53	1.31	6.78	1.35
							12	4.00	1.01	5.70	1.12	5.94	1.21	6.07	1.24	6.19	1.28	6.43	1.34	6.68	1.38
							14	4.00	1.05	5.61	1.16	5.85	1.24	5.97	1.28	6.09	1.31	6.34	1.37	6.58	1.40
							16	4.00	1.10	5.52	1.20	5.76	1.28	5.88	1.32	6.00	1.35	6.24	1.40	6.48	1.43
							18	4.00	1.15	5.43	1.24	5.66	1.32	5.78	1.35	5.90	1.38	6.14	1.43	6.39	1.46
							20	4.00	1.19	5.34	1.28	5.57	1.36	5.69	1.39	5.81	1.42	6.05	1.46	6.29	1.49
							21	4.00	1.22	5.29	1.30	5.53	1.38	5.64	1.41	5.76	1.44	6.00	1.48	6.24	1.50
							23	4.00	1.26	5.20	1.35	5.43	1.42	5.55	1.45	5.67	1.47	5.91	1.51	6.14	1.53
							25	4.00	1.31	5.11	1.39	5.34	1.46	5.46	1.49	5.57	1.51	5.81	1.54	6.05	1.56
							27	4.00	1.36	5.02	1.44	5.25	1.50	5.37	1.53	5.48	1.55	5.72	1.58	5.95	1.59
							29	4.00	1.41	4.93	1.48	5.16	1.54	5.27	1.57	5.39	1.59	5.62	1.61	5.86	1.62
							31	4.00	1.46	4.84	1.53	5.07	1.59	5.18	1.61	5.30	1.63	5.53	1.65	5.76	1.66
							33	4.00	1.51	4.75	1.58	4.98	1.63	5.09	1.65	5.20	1.67	5.43	1.69	5.66	1.69
							35	4.00	1.56	4.66	1.63	4.89	1.67	5.00	1.67	5.11	1.71	5.34	1.72	5.57	1.72
							37	4.00	1.61	4.57	1.68	4.79	1.72	4.91	1.74	5.02	1.75	5.25	1.76	5.47	1.76
							39	4.00	1.67	4.48	1.72	4.70	1.77	4.82	1.78	4.93	1.79	5.15	1.80	5.38	1.79
							42	3.95	1.75	4.35	1.80	4.57	1.84	4.68	1.85	4.79	1.86	5.01	1.86	5.24	1.85
							44	3.75	1.80	4.26	1.85	4.48	1.88	4.59	1.89	4.70	1.90	4.92	1.90	5.14	1.88
							46	3.65	1.86	4.18	1.90	4.39	1.93	4.50	1.94	4.61	1.94	4.83	1.94	5.05	1.92

12. Capacity Table

12-7. AJ140TXJ5KH/EA

COOLING

Combination (Capacity Index)					Combination (Total)	Combination (%)	Outdoor Temperature (°C,DB)	Indoor Temperature(°C, WB)													
								14		16		18		19		20		22		24	
								TC(kW)	PI(kW)	TC(kW)	PI(kW)	TC(kW)	PI(kW)	TC(kW)	PI(kW)	TC(kW)	PI(kW)	TC(kW)	PI(kW)	TC(kW)	PI(kW)
							10	4.96	1.23	7.18	1.37	7.49	1.48	7.64	1.54	7.79	1.58	8.10	1.66	8.40	1.72
							12	4.96	1.28	7.07	1.42	7.37	1.53	7.52	1.58	7.67	1.62	7.98	1.70	8.28	1.75
							14	4.96	1.34	6.96	1.47	7.25	1.58	7.40	1.62	7.55	1.67	7.86	1.73	8.16	1.78
							16	4.96	1.40	6.84	1.52	7.14	1.63	7.29	1.67	7.44	1.71	7.74	1.77	8.04	1.82
							18	4.96	1.45	6.73	1.57	7.02	1.67	7.17	1.72	7.32	1.75	7.62	1.81	7.92	1.85
							20	4.96	1.51	6.62	1.63	6.91	1.72	7.06	1.76	7.20	1.80	7.50	1.85	7.80	1.89
							21	4.96	1.54	6.56	1.66	6.85	1.75	7.00	1.79	7.15	1.82	7.44	1.87	7.74	1.91
							23	4.96	1.60	6.45	1.71	6.74	1.80	6.88	1.84	7.03	1.87	7.32	1.92	7.62	1.94
							25	4.96	1.66	6.33	1.77	6.62	1.85	6.77	1.89	6.91	1.92	7.20	1.96	7.50	1.98
6800					6800	49%	27	4.96	1.73	6.22	1.83	6.51	1.91	6.65	1.94	6.80	1.96	7.09	2.00	7.38	2.02
							29	4.96	1.79	6.11	1.88	6.40	1.96	6.54	1.99	6.68	2.01	6.97	2.05	7.26	2.06
							31	4.96	1.85	6.00	1.94	6.28	2.01	6.42	2.04	6.57	2.06	6.85	2.09	7.14	2.10
							33	4.96	1.92	5.89	2.00	6.17	2.07	6.31	2.09	6.45	2.11	6.74	2.14	7.02	2.14
							35	4.96	1.98	5.78	2.06	6.06	2.13	6.20	2.12	6.34	2.17	6.62	2.19	6.91	2.19
							37	4.96	2.05	5.67	2.13	5.95	2.18	6.08	2.20	6.22	2.22	6.51	2.24	6.79	2.23
							39	4.96	2.12	5.56	2.19	5.83	2.24	5.97	2.26	6.11	2.27	6.39	2.28	6.67	2.28
							42	4.90	2.22	5.39	2.29	5.67	2.33	5.80	2.35	5.94	2.35	6.22	2.36	6.50	2.34
							44	4.65	2.29	5.29	2.35	5.56	2.39	5.69	2.40	5.83	2.41	6.10	2.41	6.38	2.39
							46	4.53	2.36	5.18	2.42	5.45	2.45	5.58	2.46	5.72	2.47	5.99	2.46	6.26	2.44
							10	3.62	0.80	5.11	0.82	5.21	0.84	5.27	0.85	5.33	0.86	5.48	0.88	5.66	0.90
							12	3.62	0.82	4.97	0.84	5.08	0.86	5.14	0.87	5.21	0.88	5.36	0.90	5.54	0.92
							14	3.62	0.84	4.84	0.86	4.95	0.88	5.01	0.89	5.09	0.90	5.25	0.92	5.44	0.94
							16	3.62	0.86	4.71	0.88	4.83	0.90	4.90	0.91	4.97	0.92	5.14	0.94	5.34	0.96
							18	3.62	0.88	4.59	0.90	4.71	0.92	4.79	0.93	4.87	0.94	5.04	0.96	5.25	0.98
							20	3.62	0.91	4.47	0.93	4.60	0.95	4.68	0.96	4.76	0.97	4.95	0.98	5.16	1.00
							21	3.62	0.92	4.42	0.94	4.55	0.96	4.63	0.97	4.71	0.98	4.90	0.99	5.12	1.01
							23	3.62	0.94	4.31	0.96	4.45	0.98	4.53	0.99	4.62	1.00	4.82	1.02	5.04	1.03
							25	3.62	0.97	4.21	0.99	4.36	1.01	4.44	1.01	4.53	1.02	4.73	1.04	4.96	1.06
2000	2000				4000	29%	27	3.62	0.99	4.11	1.01	4.27	1.03	4.36	1.04	4.45	1.05	4.66	1.07	4.90	1.08
							29	3.62	1.02	4.02	1.04	4.18	1.05	4.28	1.06	4.37	1.07	4.59	1.09	4.83	1.11
							31	3.62	1.04	3.94	1.06	4.11	1.08	4.20	1.09	4.30	1.10	4.53	1.12	4.78	1.13
							33	3.62	1.07	3.86	1.09	4.03	1.11	4.13	1.12	4.24	1.12	4.47	1.14	4.73	1.16
							35	3.62	1.10	3.78	1.12	3.97	1.13	4.10	1.14	4.18	1.15	4.42	1.17	4.68	1.19
							37	3.62	1.12	3.71	1.14	3.91	1.16	4.01	1.17	4.13	1.18	4.37	1.20	4.64	1.21
							39	3.62	1.15	3.65	1.17	3.85	1.19	3.96	1.20	4.08	1.21	4.33	1.22	4.61	1.24
							42	3.62	1.20	3.57	1.21	3.78	1.23	3.89	1.24	4.02	1.25	4.28	1.27	4.57	1.28
							44	3.62	1.23	3.52	1.24	3.74	1.26	3.86	1.27	3.98	1.28	4.25	1.30	4.55	1.31
							46	3.62	1.26	3.48	1.27	3.70	1.29	3.83	1.30	3.95	1.31	4.23	1.33	4.53	1.34

12. Capacity Table

12-7. AJ140TXJ5KH/EA

COOLING

Combination (Capacity Index)					Combination (Total)	Combination (%)	Outdoor Temperature (°C,DB)	Indoor Temperature(°C, WB)													
								14		16		18		19		20		22		24	
								TC(kW)	PI(kW)	TC(kW)	PI(kW)	TC(kW)	PI(kW)	TC(kW)	PI(kW)	TC(kW)	PI(kW)	TC(kW)	PI(kW)	TC(kW)	PI(kW)
2000	2500				4500	32%	10	4.14	0.88	5.85	0.90	5.96	0.92	6.02	0.93	6.10	0.94	6.27	0.96	6.47	0.98
							12	4.14	0.90	5.69	0.92	5.81	0.94	5.88	0.95	5.96	0.96	6.13	0.98	6.34	1.00
							14	4.14	0.92	5.54	0.94	5.66	0.97	5.74	0.98	5.82	0.99	6.01	1.01	6.22	1.03
							16	4.14	0.95	5.39	0.97	5.52	0.99	5.60	1.00	5.69	1.01	5.88	1.03	6.11	1.05
							18	4.14	0.97	5.25	0.99	5.39	1.01	5.48	1.02	5.57	1.03	5.77	1.05	6.00	1.07
							20	4.14	1.00	5.12	1.02	5.27	1.04	5.35	1.05	5.45	1.06	5.66	1.08	5.90	1.10
							21	4.14	1.01	5.05	1.03	5.21	1.05	5.30	1.06	5.39	1.07	5.61	1.09	5.85	1.11
							23	4.14	1.03	4.93	1.06	5.09	1.08	5.19	1.09	5.29	1.10	5.51	1.12	5.76	1.13
							25	4.14	1.06	4.81	1.08	4.98	1.10	5.08	1.11	5.19	1.12	5.42	1.14	5.68	1.16
							27	4.14	1.09	4.70	1.11	4.88	1.13	4.98	1.14	5.09	1.15	5.33	1.17	5.60	1.19
							29	4.14	1.11	4.60	1.14	4.79	1.16	4.89	1.17	5.00	1.18	5.25	1.20	5.53	1.21
							31	4.14	1.14	4.50	1.16	4.70	1.18	4.81	1.19	4.92	1.20	5.18	1.22	5.46	1.24
							33	4.14	1.17	4.41	1.19	4.61	1.21	4.73	1.22	4.85	1.23	5.11	1.25	5.41	1.27
							35	4.14	1.20	4.33	1.22	4.54	1.24	4.69	1.25	4.78	1.26	5.05	1.28	5.35	1.30
							37	4.14	1.23	4.25	1.25	4.47	1.27	4.59	1.28	4.72	1.29	5.00	1.31	5.31	1.33
							39	4.14	1.26	4.18	1.28	4.41	1.30	4.53	1.31	4.66	1.32	4.95	1.34	5.27	1.36
							42	4.14	1.31	4.08	1.33	4.32	1.35	4.46	1.36	4.59	1.37	4.89	1.39	5.22	1.41
							44	4.14	1.34	4.03	1.36	4.28	1.38	4.41	1.39	4.56	1.40	4.86	1.42	5.20	1.44
							46	4.14	1.38	3.98	1.40	4.24	1.42	4.38	1.43	4.52	1.44	4.84	1.46	5.19	1.47
2000	3500				5500	39%	10	4.92	1.03	6.94	1.05	7.08	1.08	7.15	1.09	7.24	1.10	7.44	1.12	7.68	1.15
							12	4.92	1.05	6.75	1.08	6.90	1.10	6.98	1.11	7.07	1.13	7.28	1.15	7.53	1.17
							14	4.92	1.08	6.57	1.10	6.72	1.13	6.81	1.14	6.91	1.15	7.13	1.18	7.39	1.20
							16	4.92	1.11	6.40	1.13	6.56	1.16	6.65	1.17	6.76	1.18	6.99	1.20	7.25	1.22
							18	4.92	1.13	6.23	1.16	6.40	1.18	6.50	1.20	6.61	1.21	6.85	1.23	7.13	1.25
							20	4.92	1.16	6.08	1.19	6.26	1.21	6.36	1.22	6.47	1.24	6.72	1.26	7.01	1.28
							21	4.92	1.18	6.00	1.20	6.18	1.23	6.29	1.24	6.40	1.25	6.66	1.27	6.95	1.30
							23	4.92	1.21	5.85	1.23	6.05	1.26	6.16	1.27	6.28	1.28	6.54	1.30	6.84	1.32
							25	4.92	1.24	5.72	1.26	5.92	1.29	6.03	1.30	6.16	1.31	6.43	1.33	6.74	1.36
							27	4.92	1.27	5.58	1.29	5.80	1.32	5.92	1.33	6.05	1.34	6.33	1.36	6.65	1.39
							29	4.92	1.30	5.46	1.33	5.68	1.35	5.81	1.36	5.94	1.37	6.24	1.40	6.57	1.42
							31	4.92	1.33	5.35	1.36	5.58	1.38	5.71	1.40	5.85	1.41	6.15	1.43	6.49	1.45
							33	4.92	1.37	5.24	1.39	5.48	1.42	5.61	1.43	5.76	1.44	6.07	1.46	6.42	1.48
							35	4.92	1.40	5.14	1.43	5.39	1.45	5.57	1.46	5.68	1.47	6.00	1.50	6.36	1.52
							37	4.92	1.44	5.05	1.46	5.31	1.49	5.45	1.50	5.60	1.51	5.94	1.53	6.30	1.55
							39	4.92	1.48	4.96	1.50	5.23	1.52	5.38	1.53	5.54	1.55	5.88	1.57	6.26	1.59
							42	4.92	1.53	4.85	1.56	5.14	1.58	5.29	1.59	5.46	1.60	5.81	1.62	6.20	1.64
							44	4.92	1.57	4.78	1.59	5.08	1.62	5.24	1.63	5.41	1.64	5.78	1.66	6.18	1.68
							46	4.92	1.61	4.73	1.63	5.03	1.66	5.20	1.67	5.37	1.68	5.75	1.70	6.16	1.72

12. Capacity Table

12-7. AJ140TXJ5KH/EA

COOLING

Combination (Capacity Index)					Combination (Total)	Combination (%)	Outdoor Temperature (°C,DB)	Indoor Temperature(°C, WB)													
								14		16		18		19		20		22		24	
								TC(kW)	PI(kW)	TC(kW)	PI(kW)	TC(kW)	PI(kW)	TC(kW)	PI(kW)	TC(kW)	PI(kW)	TC(kW)	PI(kW)	TC(kW)	PI(kW)
2000	5000				7000	50%	10	6.24	1.26	8.80	1.30	8.97	1.33	9.07	1.34	9.18	1.36	9.44	1.39	9.74	1.41
							12	6.24	1.30	8.56	1.33	8.74	1.36	8.85	1.37	8.96	1.39	9.23	1.42	9.55	1.44
							14	6.24	1.33	8.33	1.36	8.52	1.39	8.64	1.41	8.76	1.42	9.04	1.45	9.37	1.48
							16	6.24	1.36	8.11	1.39	8.32	1.42	8.43	1.44	8.56	1.45	8.86	1.48	9.20	1.51
							18	6.24	1.40	7.90	1.43	8.12	1.46	8.24	1.47	8.38	1.49	8.68	1.52	9.03	1.54
							20	6.24	1.43	7.70	1.46	7.93	1.49	8.06	1.51	8.20	1.52	8.52	1.55	8.88	1.58
							21	6.24	1.45	7.61	1.48	7.84	1.51	7.97	1.53	8.12	1.54	8.44	1.57	8.81	1.60
							23	6.24	1.49	7.42	1.52	7.67	1.55	7.81	1.56	7.96	1.58	8.29	1.61	8.67	1.63
							25	6.24	1.53	7.24	1.56	7.50	1.59	7.65	1.60	7.81	1.62	8.15	1.64	8.55	1.67
							27	6.24	1.56	7.08	1.60	7.35	1.63	7.50	1.64	7.66	1.65	8.02	1.68	8.43	1.71
							29	6.24	1.60	6.92	1.64	7.20	1.67	7.36	1.68	7.53	1.69	7.90	1.72	8.32	1.75
							31	6.24	1.65	6.78	1.68	7.07	1.71	7.23	1.72	7.41	1.73	7.79	1.76	8.22	1.79
							33	6.24	1.69	6.64	1.72	6.95	1.75	7.12	1.76	7.30	1.78	7.69	1.80	8.14	1.83
							35	6.24	1.73	6.51	1.76	6.83	1.79	7.06	1.80	7.20	1.82	7.60	1.85	8.06	1.87
							37	6.24	1.77	6.40	1.80	6.73	1.83	6.91	1.85	7.10	1.86	7.52	1.89	7.99	1.91
							39	6.24	1.82	6.29	1.85	6.63	1.88	6.82	1.89	7.02	1.91	7.45	1.93	7.93	1.96
							42	6.24	1.89	6.15	1.92	6.51	1.95	6.71	1.96	6.92	1.97	7.37	2.00	7.86	2.03
							44	6.24	1.93	6.06	1.96	6.44	1.99	6.64	2.01	6.86	2.02	7.32	2.05	7.83	2.07
							46	6.24	1.98	5.99	2.01	6.38	2.04	6.59	2.05	6.81	2.07	7.28	2.10	7.81	2.12
2000	6800				8800	63%	10	7.51	1.91	10.60	1.96	10.80	2.01	10.92	2.03	11.05	2.05	11.36	2.09	11.72	2.14
							12	7.51	1.96	10.31	2.01	10.52	2.05	10.65	2.08	10.79	2.10	11.12	2.14	11.49	2.18
							14	7.51	2.01	10.03	2.06	10.26	2.10	10.40	2.13	10.55	2.15	10.88	2.19	11.28	2.23
							16	7.51	2.06	9.77	2.11	10.01	2.15	10.15	2.18	10.31	2.20	10.66	2.24	11.07	2.28
							18	7.51	2.11	9.51	2.16	9.77	2.21	9.92	2.23	10.09	2.25	10.45	2.29	10.88	2.33
							20	7.51	2.17	9.27	2.21	9.55	2.26	9.70	2.28	9.87	2.30	10.26	2.35	10.69	2.39
							21	7.51	2.19	9.16	2.24	9.44	2.29	9.60	2.31	9.77	2.33	10.16	2.37	10.61	2.41
							23	7.51	2.25	8.93	2.30	9.23	2.34	9.40	2.36	9.58	2.39	9.98	2.43	10.44	2.47
							25	7.51	2.31	8.72	2.35	9.03	2.40	9.21	2.42	9.40	2.44	9.82	2.48	10.29	2.52
							27	7.51	2.36	8.52	2.41	8.85	2.46	9.03	2.48	9.23	2.50	9.66	2.54	10.15	2.58
							29	7.51	2.43	8.33	2.47	8.67	2.52	8.86	2.54	9.07	2.56	9.52	2.60	10.02	2.64
							31	7.51	2.49	8.16	2.53	8.51	2.58	8.71	2.60	8.92	2.62	9.38	2.66	9.90	2.70
							33	7.51	2.55	7.99	2.60	8.36	2.64	8.57	2.66	8.79	2.68	9.26	2.73	9.80	2.76
							35	7.51	2.61	7.84	2.66	8.23	2.71	8.50	2.72	8.66	2.75	9.16	2.79	9.70	2.83
							37	7.51	2.68	7.70	2.73	8.10	2.77	8.32	2.79	8.55	2.81	9.06	2.85	9.62	2.89
							39	7.51	2.75	7.57	2.79	7.99	2.84	8.21	2.86	8.45	2.88	8.97	2.92	9.55	2.96
							42	7.51	2.85	7.40	2.90	7.84	2.94	8.07	2.96	8.33	2.98	8.87	3.02	9.47	3.06
							44	7.51	2.92	7.30	2.97	7.75	3.01	8.00	3.03	8.26	3.05	8.81	3.09	9.43	3.13
							46	7.51	3.00	7.21	3.04	7.68	3.08	7.93	3.11	8.20	3.13	8.77	3.17	9.40	3.20

12. Capacity Table

12-7. AJ140TXJ5KH/EA

COOLING

Combination (Capacity Index)					Combination (Total)	Combination (%)	Outdoor Temperature (°C,DB)	Indoor Temperature(°C, WB)													
								14		16		18		19		20		22		24	
								TC(kW)	PI(kW)	TC(kW)	PI(kW)	TC(kW)	PI(kW)	TC(kW)	PI(kW)	TC(kW)	PI(kW)	TC(kW)	PI(kW)	TC(kW)	PI(kW)
2500	2500				5000	36%	10	4.67	0.95	6.58	0.97	6.71	1.00	6.78	1.01	6.87	1.02	7.06	1.04	7.28	1.06
							12	4.67	0.97	6.40	1.00	6.54	1.02	6.62	1.03	6.70	1.04	6.91	1.06	7.14	1.08
							14	4.67	1.00	6.23	1.02	6.37	1.04	6.46	1.05	6.55	1.07	6.76	1.09	7.00	1.11
							16	4.67	1.02	6.07	1.05	6.22	1.07	6.31	1.08	6.40	1.09	6.62	1.11	6.88	1.13
							18	4.67	1.05	5.91	1.07	6.07	1.09	6.16	1.11	6.27	1.12	6.49	1.14	6.76	1.16
							20	4.67	1.07	5.76	1.10	5.93	1.12	6.03	1.13	6.13	1.14	6.37	1.16	6.64	1.18
							21	4.67	1.09	5.69	1.11	5.86	1.13	5.96	1.15	6.07	1.16	6.31	1.18	6.59	1.20
							23	4.67	1.12	5.55	1.14	5.73	1.16	5.84	1.17	5.95	1.18	6.20	1.20	6.49	1.22
							25	4.67	1.14	5.42	1.17	5.61	1.19	5.72	1.20	5.84	1.21	6.10	1.23	6.39	1.25
							27	4.67	1.17	5.29	1.20	5.50	1.22	5.61	1.23	5.73	1.24	6.00	1.26	6.30	1.28
							29	4.67	1.20	5.18	1.23	5.39	1.25	5.51	1.26	5.63	1.27	5.91	1.29	6.22	1.31
							31	4.67	1.23	5.07	1.26	5.29	1.28	5.41	1.29	5.54	1.30	5.83	1.32	6.15	1.34
							33	4.67	1.27	4.97	1.29	5.20	1.31	5.32	1.32	5.46	1.33	5.75	1.35	6.09	1.37
							35	4.67	1.30	4.87	1.32	5.11	1.34	5.28	1.35	5.38	1.36	5.69	1.38	6.03	1.40
							37	4.67	1.33	4.78	1.35	5.03	1.38	5.17	1.39	5.31	1.40	5.63	1.42	5.98	1.44
							39	4.67	1.36	4.70	1.39	4.96	1.41	5.10	1.42	5.25	1.43	5.57	1.45	5.93	1.47
							42	4.67	1.42	4.60	1.44	4.87	1.46	5.02	1.47	5.17	1.48	5.51	1.50	5.88	1.52
							44	4.67	1.45	4.54	1.47	4.82	1.49	4.97	1.51	5.13	1.52	5.48	1.54	5.86	1.56
							46	4.67	1.49	4.48	1.51	4.77	1.53	4.93	1.54	5.09	1.55	5.45	1.57	5.84	1.59
2500	3500				6000	43%	10	5.44	1.10	7.67	1.12	7.81	1.15	7.90	1.16	8.00	1.18	8.22	1.20	8.48	1.23
							12	5.44	1.12	7.46	1.15	7.61	1.18	7.71	1.19	7.81	1.20	8.04	1.23	8.32	1.25
							14	5.44	1.15	7.26	1.18	7.42	1.21	7.52	1.22	7.63	1.23	7.87	1.26	8.16	1.28
							16	5.44	1.18	7.07	1.21	7.24	1.23	7.35	1.25	7.46	1.26	7.72	1.29	8.01	1.31
							18	5.44	1.21	6.88	1.24	7.07	1.26	7.18	1.28	7.30	1.29	7.56	1.31	7.87	1.34
							20	5.44	1.24	6.71	1.27	6.91	1.30	7.02	1.31	7.14	1.32	7.42	1.35	7.74	1.37
							21	5.44	1.26	6.63	1.28	6.83	1.31	6.95	1.32	7.07	1.34	7.35	1.36	7.67	1.38
							23	5.44	1.29	6.46	1.32	6.68	1.34	6.80	1.36	6.93	1.37	7.22	1.39	7.56	1.42
							25	5.44	1.32	6.31	1.35	6.54	1.38	6.66	1.39	6.80	1.40	7.10	1.42	7.44	1.45
							27	5.44	1.36	6.17	1.38	6.40	1.41	6.53	1.42	6.68	1.43	6.99	1.46	7.34	1.48
							29	5.44	1.39	6.03	1.42	6.28	1.44	6.41	1.46	6.56	1.47	6.89	1.49	7.25	1.52
							31	5.44	1.43	5.90	1.45	6.16	1.48	6.30	1.49	6.46	1.50	6.79	1.53	7.16	1.55
							33	5.44	1.46	5.78	1.49	6.05	1.51	6.20	1.53	6.36	1.54	6.70	1.56	7.09	1.59
							35	5.44	1.50	5.67	1.53	5.95	1.55	6.15	1.56	6.27	1.58	6.62	1.60	7.02	1.62
							37	5.44	1.54	5.57	1.56	5.86	1.59	6.02	1.60	6.19	1.61	6.55	1.64	6.96	1.66
							39	5.44	1.58	5.48	1.60	5.78	1.63	5.94	1.64	6.12	1.65	6.49	1.68	6.91	1.70
							42	5.44	1.64	5.35	1.66	5.67	1.69	5.84	1.70	6.02	1.71	6.42	1.73	6.85	1.76
							44	5.44	1.68	5.28	1.70	5.61	1.73	5.79	1.74	5.97	1.75	6.38	1.77	6.82	1.80
							46	5.44	1.72	5.22	1.74	5.56	1.77	5.74	1.78	5.93	1.79	6.35	1.82	6.80	1.84

12. Capacity Table

12-7. AJ140TXJ5KH/EA

COOLING

Combination (Capacity Index)					Combination (Total)	Combination (%)	Outdoor Temperature (°C,DB)	Indoor Temperature(°C, WB)													
								14		16		18		19		20		22		24	
								TC(kW)	PI(kW)	TC(kW)	PI(kW)	TC(kW)	PI(kW)	TC(kW)	PI(kW)	TC(kW)	PI(kW)	TC(kW)	PI(kW)	TC(kW)	PI(kW)
2500	5000				7500	54%	10	6.76	1.59	9.54	1.63	9.72	1.67	9.83	1.69	9.95	1.70	10.22	1.74	10.55	1.78
							12	6.76	1.63	9.28	1.67	9.47	1.71	9.59	1.73	9.71	1.74	10.00	1.78	10.34	1.81
							14	6.76	1.67	9.03	1.71	9.24	1.75	9.36	1.77	9.49	1.78	9.80	1.82	10.15	1.85
							16	6.76	1.71	8.79	1.75	9.01	1.79	9.14	1.81	9.28	1.83	9.60	1.86	9.96	1.90
							18	6.76	1.75	8.56	1.79	8.80	1.83	8.93	1.85	9.08	1.87	9.41	1.90	9.79	1.94
							20	6.76	1.80	8.35	1.84	8.59	1.88	8.73	1.90	8.89	1.91	9.23	1.95	9.62	1.98
							21	6.76	1.82	8.24	1.86	8.49	1.90	8.64	1.92	8.80	1.94	9.15	1.97	9.55	2.01
							23	6.76	1.87	8.04	1.91	8.31	1.95	8.46	1.96	8.62	1.98	8.99	2.02	9.40	2.05
							25	6.76	1.92	7.85	1.96	8.13	1.99	8.29	2.01	8.46	2.03	8.83	2.06	9.26	2.10
							27	6.76	1.96	7.67	2.00	7.96	2.04	8.13	2.06	8.30	2.08	8.69	2.11	9.13	2.15
							29	6.76	2.01	7.50	2.05	7.81	2.09	7.98	2.11	8.16	2.13	8.57	2.16	9.02	2.20
							31	6.76	2.07	7.34	2.10	7.66	2.14	7.84	2.16	8.03	2.18	8.45	2.21	8.91	2.25
							33	6.76	2.12	7.19	2.16	7.53	2.19	7.71	2.21	7.91	2.23	8.34	2.26	8.82	2.30
							35	6.76	2.17	7.06	2.21	7.40	2.25	7.65	2.26	7.80	2.28	8.24	2.32	8.73	2.35
							37	6.76	2.23	6.93	2.27	7.29	2.30	7.49	2.32	7.70	2.34	8.15	2.37	8.66	2.40
							39	6.76	2.28	6.81	2.32	7.19	2.36	7.39	2.38	7.61	2.39	8.08	2.43	8.60	2.46
							42	6.76	2.37	6.66	2.41	7.05	2.44	7.27	2.46	7.49	2.48	7.98	2.51	8.52	2.54
							44	6.76	2.43	6.57	2.47	6.98	2.50	7.20	2.52	7.43	2.54	7.93	2.57	8.48	2.60
							46	6.76	2.49	6.49	2.53	6.91	2.56	7.14	2.58	7.38	2.60	7.89	2.63	8.46	2.66
2500	6800				9300	66%	10	8.03	2.02	11.33	2.07	11.55	2.12	11.68	2.15	11.82	2.17	12.15	2.22	12.54	2.26
							12	8.03	2.07	11.02	2.13	11.25	2.17	11.39	2.20	11.54	2.22	11.89	2.27	12.29	2.31
							14	8.03	2.13	10.73	2.18	10.97	2.23	11.12	2.25	11.28	2.27	11.64	2.32	12.06	2.36
							16	8.03	2.18	10.44	2.23	10.71	2.28	10.86	2.30	11.03	2.33	11.40	2.37	11.84	2.42
							18	8.03	2.24	10.17	2.29	10.45	2.33	10.61	2.36	10.79	2.38	11.18	2.43	11.63	2.47
							20	8.03	2.29	9.92	2.34	10.21	2.39	10.38	2.41	10.56	2.44	10.97	2.48	11.44	2.53
							21	8.03	2.32	9.79	2.37	10.09	2.42	10.27	2.44	10.45	2.47	10.87	2.51	11.34	2.56
							23	8.03	2.38	9.55	2.43	9.87	2.48	10.05	2.50	10.24	2.53	10.68	2.57	11.17	2.61
							25	8.03	2.44	9.33	2.49	9.66	2.54	9.85	2.56	10.05	2.59	10.50	2.63	11.00	2.67
							27	8.03	2.50	9.11	2.55	9.46	2.60	9.66	2.62	9.87	2.65	10.33	2.69	10.85	2.73
							29	8.03	2.57	8.91	2.62	9.28	2.66	9.48	2.69	9.70	2.71	10.18	2.75	10.71	2.80
							31	8.03	2.63	8.72	2.68	9.10	2.73	9.32	2.75	9.54	2.78	10.04	2.82	10.59	2.86
							33	8.03	2.70	8.55	2.75	8.94	2.80	9.16	2.82	9.40	2.84	9.91	2.89	10.48	2.93
							35	8.03	2.77	8.39	2.82	8.80	2.86	9.09	2.88	9.26	2.91	9.79	2.95	10.38	2.99
							37	8.03	2.84	8.24	2.89	8.66	2.93	8.90	2.96	9.15	2.98	9.69	3.02	10.29	3.06
							39	8.03	2.91	8.10	2.96	8.54	3.00	8.78	3.03	9.04	3.05	9.60	3.09	10.21	3.13
							42	8.03	3.02	7.91	3.07	8.38	3.11	8.63	3.14	8.90	3.16	9.49	3.20	10.12	3.24
							44	8.03	3.10	7.81	3.14	8.29	3.19	8.55	3.21	8.83	3.23	9.43	3.28	10.08	3.32
							46	8.03	3.17	7.72	3.22	8.21	3.27	8.48	3.29	8.77	3.31	9.38	3.35	10.05	3.39

12. Capacity Table

12-7. AJ140TXJ5KH/EA

COOLING

Combination (Capacity Index)					Combination (Total)	Combination (%)	Outdoor Temperature (°C,DB)	Indoor Temperature(°C, WB)													
								14		16		18		19		20		22		24	
								TC(kW)	PI(kW)	TC(kW)	PI(kW)	TC(kW)	PI(kW)	TC(kW)	PI(kW)	TC(kW)	PI(kW)	TC(kW)	PI(kW)	TC(kW)	PI(kW)
3500	3500				7000	50%	10	6.21	1.24	8.76	1.27	8.93	1.31	9.03	1.32	9.14	1.33	9.40	1.36	9.70	1.39
							12	6.21	1.27	8.53	1.31	8.70	1.34	8.81	1.35	8.93	1.37	9.19	1.39	9.51	1.42
							14	6.21	1.31	8.30	1.34	8.49	1.37	8.60	1.38	8.72	1.40	9.00	1.43	9.33	1.45
							16	6.21	1.34	8.08	1.37	8.28	1.40	8.40	1.42	8.53	1.43	8.82	1.46	9.16	1.48
							18	6.21	1.37	7.87	1.40	8.08	1.43	8.21	1.45	8.34	1.46	8.65	1.49	9.00	1.52
							20	6.21	1.41	7.67	1.44	7.90	1.47	8.03	1.48	8.17	1.50	8.48	1.53	8.84	1.55
							21	6.21	1.43	7.57	1.46	7.81	1.49	7.94	1.50	8.08	1.52	8.41	1.54	8.77	1.57
							23	6.21	1.46	7.39	1.49	7.63	1.52	7.77	1.54	7.92	1.55	8.26	1.58	8.64	1.61
							25	6.21	1.50	7.21	1.53	7.47	1.56	7.62	1.58	7.77	1.59	8.12	1.62	8.51	1.64
							27	6.21	1.54	7.05	1.57	7.32	1.60	7.47	1.61	7.63	1.63	7.99	1.65	8.39	1.68
							29	6.21	1.58	6.89	1.61	7.17	1.64	7.33	1.65	7.50	1.67	7.87	1.69	8.29	1.72
							31	6.21	1.62	6.75	1.65	7.04	1.68	7.20	1.69	7.38	1.71	7.76	1.73	8.19	1.76
							33	6.21	1.66	6.61	1.69	6.92	1.72	7.09	1.73	7.27	1.75	7.66	1.77	8.10	1.80
							35	6.21	1.70	6.49	1.73	6.80	1.76	7.03	1.77	7.17	1.79	7.57	1.81	8.02	1.84
							37	6.21	1.74	6.37	1.77	6.70	1.80	6.88	1.82	7.07	1.83	7.49	1.86	7.96	1.88
							39	6.21	1.79	6.26	1.82	6.60	1.85	6.79	1.86	6.99	1.87	7.42	1.90	7.90	1.93
							42	6.21	1.86	6.12	1.89	6.48	1.91	6.68	1.93	6.89	1.94	7.34	1.97	7.83	1.99
							44	6.21	1.90	6.04	1.93	6.41	1.96	6.61	1.97	6.83	1.99	7.29	2.01	7.80	2.04
							46	6.21	1.95	5.97	1.98	6.35	2.01	6.56	2.02	6.78	2.03	7.25	2.06	7.77	2.09
3500	5000				8500	61%	10	7.54	1.80	10.63	1.84	10.83	1.89	10.96	1.91	11.09	1.93	11.40	1.97	11.77	2.01
							12	7.54	1.84	10.34	1.89	10.56	1.93	10.69	1.95	10.83	1.98	11.16	2.02	11.53	2.06
							14	7.54	1.89	10.07	1.94	10.30	1.98	10.43	2.00	10.58	2.02	10.92	2.06	11.32	2.10
							16	7.54	1.94	9.80	1.98	10.05	2.03	10.19	2.05	10.35	2.07	10.70	2.11	11.11	2.15
							18	7.54	1.99	9.55	2.03	9.81	2.08	9.96	2.10	10.12	2.12	10.49	2.16	10.91	2.20
							20	7.54	2.04	9.31	2.08	9.58	2.13	9.74	2.15	9.91	2.17	10.29	2.21	10.73	2.25
							21	7.54	2.06	9.19	2.11	9.47	2.15	9.63	2.17	9.81	2.19	10.20	2.23	10.64	2.27
							23	7.54	2.12	8.96	2.16	9.26	2.20	9.43	2.22	9.61	2.24	10.02	2.28	10.48	2.32
							25	7.54	2.17	8.75	2.21	9.06	2.26	9.24	2.28	9.43	2.30	9.85	2.34	10.33	2.38
							27	7.54	2.23	8.55	2.27	8.88	2.31	9.06	2.33	9.26	2.35	9.69	2.39	10.18	2.43
							29	7.54	2.28	8.36	2.33	8.70	2.37	8.90	2.39	9.10	2.41	9.55	2.45	10.05	2.49
							31	7.54	2.34	8.19	2.38	8.54	2.43	8.74	2.45	8.95	2.47	9.42	2.51	9.94	2.54
							33	7.54	2.40	8.02	2.44	8.39	2.49	8.60	2.51	8.82	2.53	9.30	2.56	9.83	2.60
							35	7.54	2.46	7.87	2.50	8.25	2.55	8.53	2.56	8.69	2.59	9.19	2.62	9.74	2.66
							37	7.54	2.52	7.73	2.57	8.13	2.61	8.35	2.63	8.58	2.65	9.09	2.69	9.65	2.72
							39	7.54	2.59	7.60	2.63	8.01	2.67	8.24	2.69	8.48	2.71	9.01	2.75	9.58	2.79
							42	7.54	2.68	7.43	2.73	7.86	2.77	8.10	2.79	8.36	2.81	8.90	2.85	9.50	2.88
							44	7.54	2.75	7.33	2.79	7.78	2.83	8.03	2.85	8.28	2.87	8.85	2.91	9.46	2.95
							46	7.54	2.82	7.24	2.86	7.71	2.90	7.96	2.92	8.23	2.94	8.80	2.98	9.43	3.02

12. Capacity Table

12-7. AJ140TXJ5KH/EA

COOLING

Combination (Capacity Index)					Combination (Total)	Combination (%)	Outdoor Temperature (°C,DB)	Indoor Temperature(°C, WB)													
								14		16		18		19		20		22		24	
								TC(kW)	PI(kW)	TC(kW)	PI(kW)	TC(kW)	PI(kW)	TC(kW)	PI(kW)	TC(kW)	PI(kW)	TC(kW)	PI(kW)	TC(kW)	PI(kW)
3500	6800				10300	74%	10	8.80	2.40	12.42	2.46	12.65	2.52	12.79	2.55	12.95	2.58	13.31	2.63	13.74	2.69
							12	8.80	2.46	12.08	2.52	12.33	2.58	12.48	2.61	12.65	2.64	13.03	2.69	13.47	2.75
							14	8.80	2.53	11.75	2.59	12.02	2.64	12.18	2.67	12.36	2.70	12.75	2.75	13.21	2.81
							16	8.80	2.59	11.44	2.65	11.73	2.71	11.90	2.74	12.08	2.76	12.49	2.82	12.97	2.87
							18	8.80	2.65	11.15	2.71	11.45	2.77	11.63	2.80	11.82	2.83	12.25	2.88	12.74	2.93
							20	8.80	2.72	10.87	2.78	11.19	2.84	11.37	2.87	11.57	2.90	12.02	2.95	12.53	3.00
							21	8.80	2.76	10.73	2.82	11.06	2.87	11.25	2.90	11.45	2.93	11.91	2.98	12.43	3.03
							23	8.80	2.83	10.47	2.89	10.81	2.94	11.01	2.97	11.22	3.00	11.70	3.05	12.24	3.10
							25	8.80	2.90	10.22	2.96	10.58	3.02	10.79	3.04	11.01	3.07	11.50	3.12	12.06	3.17
							27	8.80	2.97	9.99	3.03	10.37	3.09	10.58	3.12	10.81	3.14	11.32	3.20	11.89	3.25
							29	8.80	3.05	9.77	3.11	10.16	3.16	10.39	3.19	10.63	3.22	11.15	3.27	11.74	3.32
							31	8.80	3.13	9.56	3.19	9.97	3.24	10.21	3.27	10.45	3.30	11.00	3.35	11.60	3.40
							33	8.80	3.21	9.37	3.26	9.80	3.32	10.04	3.35	10.30	3.37	10.86	3.43	11.48	3.48
							35	8.80	3.29	9.19	3.35	9.64	3.40	9.96	3.42	10.15	3.45	10.73	3.51	11.37	3.56
							37	8.80	3.37	9.02	3.43	9.49	3.48	9.75	3.51	10.02	3.54	10.62	3.59	11.27	3.64
							39	8.80	3.46	8.87	3.51	9.36	3.57	9.62	3.60	9.90	3.62	10.52	3.67	11.19	3.72
							42	8.80	3.59	8.67	3.64	9.18	3.70	9.46	3.72	9.76	3.75	10.39	3.80	11.09	3.85
							44	8.80	3.68	8.56	3.73	9.08	3.79	9.37	3.81	9.67	3.84	10.33	3.89	11.05	3.94
							46	8.80	3.77	8.45	3.82	9.00	3.88	9.29	3.90	9.61	3.93	10.28	3.98	11.01	4.03
5000	5000				10000	71%	10	8.86	2.18	12.49	2.23	12.73	2.29	12.87	2.31	13.03	2.34	13.39	2.39	13.82	2.43
							12	8.86	2.23	12.15	2.29	12.41	2.34	12.56	2.37	12.72	2.39	13.10	2.44	13.55	2.49
							14	8.86	2.29	11.83	2.34	12.10	2.40	12.26	2.42	12.43	2.45	12.83	2.50	13.29	2.54
							16	8.86	2.35	11.51	2.40	11.80	2.45	11.97	2.48	12.15	2.50	12.57	2.55	13.05	2.60
							18	8.86	2.41	11.22	2.46	11.52	2.51	11.70	2.54	11.89	2.56	12.32	2.61	12.82	2.66
							20	8.86	2.47	10.93	2.52	11.25	2.57	11.44	2.60	11.64	2.62	12.09	2.67	12.61	2.72
							21	8.86	2.50	10.79	2.55	11.13	2.61	11.32	2.63	11.52	2.66	11.98	2.70	12.50	2.75
							23	8.86	2.56	10.53	2.62	10.88	2.67	11.08	2.69	11.29	2.72	11.77	2.77	12.31	2.81
							25	8.86	2.63	10.28	2.68	10.65	2.73	10.85	2.76	11.08	2.78	11.57	2.83	12.13	2.88
							27	8.86	2.70	10.05	2.75	10.43	2.80	10.65	2.82	10.88	2.85	11.39	2.90	11.96	2.94
							29	8.86	2.76	9.82	2.82	10.23	2.87	10.45	2.89	10.69	2.92	11.22	2.97	11.81	3.01
							31	8.86	2.83	9.62	2.89	10.04	2.94	10.27	2.96	10.52	2.99	11.06	3.03	11.67	3.08
							33	8.86	2.91	9.42	2.96	9.86	3.01	10.10	3.03	10.36	3.06	10.92	3.11	11.55	3.15
							35	8.86	2.98	9.24	3.03	9.70	3.08	10.02	3.10	10.21	3.13	10.79	3.18	11.44	3.22
							37	8.86	3.06	9.08	3.11	9.55	3.16	9.81	3.18	10.08	3.21	10.68	3.25	11.34	3.30
							39	8.86	3.13	8.93	3.18	9.41	3.23	9.68	3.26	9.96	3.28	10.58	3.33	11.26	3.37
							42	8.86	3.25	8.72	3.30	9.24	3.35	9.52	3.38	9.81	3.40	10.46	3.45	11.16	3.49
							44	8.86	3.33	8.61	3.38	9.14	3.43	9.43	3.46	9.73	3.48	10.39	3.53	11.11	3.57
							46	8.86	3.41	8.50	3.47	9.05	3.52	9.35	3.54	9.66	3.56	10.34	3.61	11.08	3.65

12. Capacity Table

12-7. AJ140TXJ5KH/EA

COOLING

Combination (Capacity Index)					Combination (Total)	Combination (%)	Outdoor Temperature (°C,DB)	Indoor Temperature(°C, WB)													
								14		16		18		19		20		22		24	
								TC(kW)	PI(kW)	TC(kW)	PI(kW)	TC(kW)	PI(kW)	TC(kW)	PI(kW)	TC(kW)	PI(kW)	TC(kW)	PI(kW)	TC(kW)	PI(kW)
5000	6800				11800	84%	10	10.13	2.47	14.29	2.54	14.56	2.60	14.72	2.63	14.90	2.65	15.32	2.71	15.81	2.76
							12	10.13	2.53	13.90	2.60	14.19	2.66	14.36	2.69	14.55	2.72	14.99	2.77	15.50	2.83
							14	10.13	2.60	13.52	2.66	13.83	2.72	14.02	2.75	14.22	2.78	14.67	2.83	15.20	2.89
							16	10.13	2.66	13.17	2.73	13.50	2.79	13.69	2.82	13.90	2.84	14.38	2.90	14.93	2.95
							18	10.13	2.73	12.83	2.79	13.18	2.85	13.38	2.88	13.60	2.91	14.09	2.97	14.66	3.02
							20	10.13	2.80	12.50	2.86	12.87	2.92	13.08	2.95	13.31	2.98	13.83	3.03	14.42	3.09
							21	10.13	2.84	12.35	2.90	12.72	2.96	12.94	2.99	13.18	3.02	13.70	3.07	14.30	3.12
							23	10.13	2.91	12.04	2.97	12.44	3.03	12.67	3.06	12.92	3.09	13.46	3.14	14.08	3.19
							25	10.13	2.98	11.76	3.04	12.18	3.10	12.41	3.13	12.67	3.16	13.23	3.21	13.87	3.27
							27	10.13	3.06	11.49	3.12	11.93	3.18	12.18	3.21	12.44	3.24	13.02	3.29	13.68	3.34
							29	10.13	3.14	11.24	3.20	11.69	3.26	11.95	3.29	12.23	3.31	12.83	3.37	13.51	3.42
							31	10.13	3.22	11.00	3.28	11.48	3.34	11.74	3.36	12.03	3.39	12.65	3.45	13.35	3.50
							33	10.13	3.30	10.78	3.36	11.28	3.42	11.55	3.45	11.85	3.47	12.49	3.53	13.21	3.58
							35	10.13	3.38	10.57	3.44	11.09	3.50	11.46	3.52	11.68	3.56	12.34	3.61	13.08	3.66
							37	10.13	3.47	10.38	3.53	10.92	3.59	11.22	3.61	11.53	3.64	12.21	3.69	12.97	3.74
							39	10.13	3.56	10.21	3.62	10.77	3.67	11.07	3.70	11.40	3.73	12.10	3.78	12.88	3.83
							42	10.13	3.69	9.98	3.75	10.57	3.81	10.89	3.83	11.23	3.86	11.96	3.91	12.76	3.96
							44	10.13	3.78	9.84	3.84	10.45	3.90	10.78	3.93	11.13	3.95	11.88	4.00	12.71	4.05
							46	10.13	3.88	9.73	3.94	10.35	3.99	10.69	4.02	11.05	4.05	11.83	4.10	12.67	4.15
6800	6800				13600	97%	10	13.04	2.72	13.56	2.77	14.08	2.83	14.34	2.86	14.60	2.89	15.14	2.95	15.68	3.00
							12	12.82	2.79	13.33	2.85	13.85	2.90	14.11	2.93	14.38	2.96	14.92	3.02	15.46	3.08
							14	12.59	2.86	13.10	2.92	13.63	2.98	13.89	3.01	14.16	3.04	14.69	3.10	15.24	3.16
							16	12.37	2.94	12.88	3.00	13.40	3.06	13.67	3.09	13.93	3.11	14.47	3.17	15.02	3.23
							18	12.14	3.01	12.66	3.07	13.18	3.13	13.45	3.16	13.71	3.19	14.25	3.25	14.80	3.31
							20	11.92	3.09	12.43	3.15	12.96	3.21	13.22	3.24	13.49	3.27	14.03	3.33	14.58	3.39
							21	11.80	3.13	12.32	3.19	12.85	3.25	13.11	3.28	13.38	3.31	13.92	3.37	14.47	3.43
							23	11.58	3.21	12.10	3.27	12.63	3.33	12.89	3.36	13.16	3.39	13.70	3.45	14.25	3.51
							25	11.36	3.29	11.88	3.35	12.41	3.42	12.67	3.45	12.94	3.48	13.48	3.54	14.03	3.60
							27	11.14	3.38	11.66	3.44	12.19	3.50	12.45	3.53	12.72	3.56	13.27	3.62	13.82	3.68
							29	10.91	3.46	11.44	3.52	11.97	3.58	12.23	3.61	12.50	3.65	13.05	3.71	13.60	3.77
							31	10.69	3.55	11.22	3.61	11.75	3.67	12.01	3.70	12.28	3.73	12.83	3.79	13.38	3.86
							33	10.47	3.63	11.00	3.70	11.53	3.76	11.80	3.79	12.07	3.82	12.61	3.88	13.17	3.94
							35	10.25	3.72	10.78	3.78	11.31	3.85	11.60	3.87	11.85	3.91	12.40	3.97	12.95	4.04
							37	10.03	3.81	10.56	3.87	11.09	3.94	11.36	3.97	11.63	4.00	12.18	4.06	12.74	4.13
							39	9.81	3.90	10.34	3.97	10.88	4.03	11.15	4.06	11.42	4.09	11.97	4.16	12.52	4.22
							42	9.49	4.04	10.02	4.11	10.55	4.17	10.82	4.20	11.10	4.23	11.65	4.30	12.21	4.36
							44	9.27	4.14	9.80	4.20	10.34	4.26	10.61	4.30	10.88	4.33	11.43	4.39	11.99	4.46
							46	9.05	4.23	9.58	4.30	10.12	4.36	10.39	4.39	10.67	4.43	11.22	4.49	11.78	4.56

12. Capacity Table

12-7. AJ140TXJ5KH/EA

COOLING

Combination (Capacity Index)					Combination (Total)	Combination (%)	Outdoor Temperature (°C,DB)	Indoor Temperature(°C, WB)													
								14		16		18		19		20		22		24	
								TC(kW)	PI(kW)	TC(kW)	PI(kW)	TC(kW)	PI(kW)	TC(kW)	PI(kW)	TC(kW)	PI(kW)	TC(kW)	PI(kW)	TC(kW)	PI(kW)
2000	2000	2000			6000	43%	10	5.44	1.31	7.67	1.34	7.81	1.37	7.90	1.39	8.00	1.40	8.22	1.43	8.48	1.46
							12	5.44	1.34	7.46	1.37	7.61	1.40	7.71	1.42	7.81	1.43	8.04	1.46	8.32	1.49
							14	5.44	1.37	7.26	1.41	7.42	1.44	7.52	1.45	7.63	1.47	7.87	1.50	8.16	1.53
							16	5.44	1.41	7.07	1.44	7.24	1.47	7.35	1.49	7.46	1.50	7.72	1.53	8.01	1.56
							18	5.44	1.44	6.88	1.48	7.07	1.51	7.18	1.52	7.30	1.54	7.56	1.57	7.87	1.60
							20	5.44	1.48	6.71	1.51	6.91	1.54	7.02	1.56	7.14	1.57	7.42	1.60	7.74	1.63
							21	5.44	1.50	6.63	1.53	6.83	1.56	6.95	1.58	7.07	1.59	7.35	1.62	7.67	1.65
							23	5.44	1.54	6.46	1.57	6.68	1.60	6.80	1.62	6.93	1.63	7.22	1.66	7.56	1.69
							25	5.44	1.58	6.31	1.61	6.54	1.64	6.66	1.66	6.80	1.67	7.10	1.70	7.44	1.73
							27	5.44	1.62	6.17	1.65	6.40	1.68	6.53	1.69	6.68	1.71	6.99	1.74	7.34	1.77
							29	5.44	1.66	6.03	1.69	6.28	1.72	6.41	1.74	6.56	1.75	6.89	1.78	7.25	1.81
							31	5.44	1.70	5.90	1.73	6.16	1.76	6.30	1.78	6.46	1.79	6.79	1.82	7.16	1.85
							33	5.44	1.74	5.78	1.78	6.05	1.81	6.20	1.82	6.36	1.84	6.70	1.86	7.09	1.89
							35	5.44	1.79	5.67	1.82	5.95	1.85	6.15	1.86	6.27	1.88	6.62	1.91	7.02	1.93
							37	5.44	1.83	5.57	1.86	5.86	1.89	6.02	1.91	6.19	1.92	6.55	1.95	6.96	1.98
							39	5.44	1.88	5.48	1.91	5.78	1.94	5.94	1.96	6.12	1.97	6.49	2.00	6.91	2.02
							42	5.44	1.95	5.35	1.98	5.67	2.01	5.84	2.03	6.02	2.04	6.42	2.07	6.85	2.09
							44	5.44	2.00	5.28	2.03	5.61	2.06	5.79	2.07	5.97	2.09	6.38	2.12	6.82	2.14
							46	5.44	2.05	5.22	2.08	5.56	2.11	5.74	2.12	5.93	2.14	6.35	2.17	6.80	2.19
2000	2000	2500			6500	46%	10	5.96	1.41	8.40	1.44	8.56	1.47	8.66	1.49	8.76	1.51	9.01	1.54	9.30	1.57
							12	5.96	1.44	8.17	1.48	8.34	1.51	8.45	1.53	8.56	1.54	8.81	1.57	9.11	1.61
							14	5.96	1.48	7.95	1.51	8.14	1.55	8.24	1.56	8.36	1.58	8.63	1.61	8.94	1.64
							16	5.96	1.51	7.74	1.55	7.94	1.58	8.05	1.60	8.18	1.62	8.46	1.65	8.78	1.68
							18	5.96	1.55	7.54	1.59	7.75	1.62	7.87	1.64	8.00	1.65	8.29	1.69	8.62	1.72
							20	5.96	1.59	7.35	1.63	7.57	1.66	7.69	1.68	7.83	1.69	8.13	1.72	8.48	1.75
							21	5.96	1.61	7.26	1.65	7.48	1.68	7.61	1.70	7.75	1.71	8.06	1.74	8.41	1.77
							23	5.96	1.65	7.08	1.69	7.32	1.72	7.45	1.74	7.60	1.75	7.92	1.78	8.28	1.81
							25	5.96	1.70	6.92	1.73	7.16	1.76	7.30	1.78	7.45	1.80	7.78	1.83	8.16	1.86
							27	5.96	1.74	6.76	1.77	7.02	1.81	7.16	1.82	7.32	1.84	7.66	1.87	8.05	1.90
							29	5.96	1.78	6.61	1.82	6.88	1.85	7.03	1.87	7.19	1.88	7.55	1.91	7.94	1.94
							31	5.96	1.83	6.47	1.86	6.75	1.90	6.91	1.91	7.07	1.93	7.44	1.96	7.85	1.99
							33	5.96	1.87	6.34	1.91	6.63	1.94	6.79	1.96	6.97	1.97	7.35	2.00	7.77	2.03
							35	5.96	1.92	6.22	1.96	6.52	1.99	6.74	2.00	6.87	2.02	7.26	2.05	7.69	2.08
							37	5.96	1.97	6.11	2.00	6.42	2.04	6.60	2.05	6.78	2.07	7.18	2.10	7.63	2.13
							39	5.96	2.02	6.00	2.05	6.33	2.09	6.51	2.10	6.70	2.12	7.12	2.15	7.57	2.18
							42	5.96	2.10	5.87	2.13	6.21	2.16	6.40	2.18	6.60	2.19	7.03	2.22	7.51	2.25
							44	5.96	2.15	5.79	2.18	6.15	2.21	6.34	2.23	6.55	2.25	6.99	2.28	7.48	2.30
							46	5.96	2.20	5.72	2.24	6.09	2.27	6.29	2.28	6.50	2.30	6.95	2.33	7.45	2.36

12. Capacity Table

12-7. AJ140TXJ5KH/EA

COOLING

Combination (Capacity Index)					Combination (Total)	Combination (%)	Outdoor Temperature (°C,DB)	Indoor Temperature(°C, WB)													
								14		16		18		19		20		22		24	
								TC(kW)	PI(kW)	TC(kW)	PI(kW)	TC(kW)	PI(kW)	TC(kW)	PI(kW)	TC(kW)	PI(kW)	TC(kW)	PI(kW)	TC(kW)	PI(kW)
2000	2000	3500			7500	54%	10	6.73	1.56	9.50	1.60	9.68	1.64	9.79	1.66	9.91	1.67	10.18	1.71	10.51	1.74
							12	6.73	1.60	9.24	1.64	9.43	1.68	9.55	1.69	9.68	1.71	9.97	1.75	10.30	1.78
							14	6.73	1.64	8.99	1.68	9.20	1.72	9.32	1.73	9.45	1.75	9.76	1.79	10.11	1.82
							16	6.73	1.68	8.76	1.72	8.97	1.76	9.10	1.78	9.24	1.79	9.56	1.83	9.92	1.86
							18	6.73	1.72	8.53	1.76	8.76	1.80	8.90	1.82	9.04	1.84	9.37	1.87	9.75	1.90
							20	6.73	1.77	8.31	1.81	8.56	1.84	8.70	1.86	8.85	1.88	9.20	1.91	9.59	1.95
							21	6.73	1.79	8.21	1.83	8.46	1.87	8.61	1.88	8.76	1.90	9.11	1.94	9.51	1.97
							23	6.73	1.84	8.01	1.87	8.27	1.91	8.42	1.93	8.59	1.95	8.95	1.98	9.36	2.01
							25	6.73	1.88	7.82	1.92	8.10	1.96	8.25	1.98	8.42	1.99	8.80	2.03	9.22	2.06
							27	6.73	1.93	7.64	1.97	7.93	2.01	8.10	2.02	8.27	2.04	8.66	2.07	9.10	2.11
							29	6.73	1.98	7.47	2.02	7.78	2.05	7.95	2.07	8.13	2.09	8.53	2.12	8.98	2.16
							31	6.73	2.03	7.31	2.07	7.63	2.10	7.81	2.12	8.00	2.14	8.41	2.17	8.88	2.21
							33	6.73	2.08	7.17	2.12	7.50	2.16	7.68	2.17	7.88	2.19	8.31	2.22	8.78	2.26
							35	6.73	2.13	7.03	2.17	7.37	2.21	7.62	2.22	7.77	2.24	8.21	2.28	8.70	2.31
							37	6.73	2.19	6.90	2.23	7.26	2.26	7.46	2.28	7.67	2.30	8.12	2.33	8.62	2.36
							39	6.73	2.24	6.79	2.28	7.16	2.32	7.36	2.33	7.58	2.35	8.05	2.38	8.56	2.42
							42	6.73	2.33	6.63	2.36	7.02	2.40	7.24	2.42	7.46	2.43	7.95	2.47	8.49	2.50
							44	6.73	2.39	6.55	2.42	6.95	2.46	7.17	2.48	7.40	2.49	7.90	2.53	8.45	2.56
							46	6.73	2.45	6.47	2.48	6.88	2.52	7.11	2.53	7.35	2.55	7.86	2.58	8.43	2.62
2000	2000	5000			9000	64%	10	8.29	1.93	11.69	1.98	11.91	2.03	12.05	2.05	12.20	2.07	12.54	2.12	12.94	2.16
							12	8.29	1.98	11.38	2.03	11.61	2.08	11.75	2.10	11.91	2.12	12.27	2.17	12.68	2.21
							14	8.29	2.03	11.07	2.08	11.32	2.13	11.47	2.15	11.64	2.17	12.01	2.21	12.44	2.26
							16	8.29	2.08	10.78	2.13	11.05	2.18	11.21	2.20	11.38	2.22	11.77	2.27	12.22	2.31
							18	8.29	2.13	10.50	2.18	10.78	2.23	10.95	2.25	11.13	2.27	11.54	2.32	12.00	2.36
							20	8.29	2.19	10.23	2.24	10.54	2.28	10.71	2.31	10.90	2.33	11.32	2.37	11.80	2.41
							21	8.29	2.22	10.10	2.26	10.42	2.31	10.59	2.33	10.79	2.36	11.22	2.40	11.71	2.44
							23	8.29	2.27	9.86	2.32	10.18	2.37	10.37	2.39	10.57	2.41	11.02	2.45	11.52	2.50
							25	8.29	2.33	9.62	2.38	9.97	2.42	10.16	2.45	10.37	2.47	10.83	2.51	11.36	2.55
							27	8.29	2.39	9.40	2.44	9.76	2.48	9.97	2.51	10.18	2.53	10.66	2.57	11.20	2.61
							29	8.29	2.45	9.20	2.50	9.57	2.54	9.78	2.57	10.01	2.59	10.50	2.63	11.06	2.67
							31	8.29	2.51	9.00	2.56	9.39	2.61	9.61	2.63	9.85	2.65	10.36	2.69	10.93	2.73
							33	8.29	2.58	8.82	2.62	9.23	2.67	9.46	2.69	9.70	2.71	10.22	2.76	10.81	2.80
							35	8.29	2.64	8.65	2.69	9.08	2.73	9.38	2.75	9.56	2.78	10.10	2.82	10.71	2.86
							37	8.29	2.71	8.50	2.76	8.94	2.80	9.18	2.82	9.44	2.84	10.00	2.89	10.62	2.93
							39	8.29	2.78	8.36	2.82	8.81	2.87	9.06	2.89	9.33	2.91	9.90	2.95	10.54	2.99
							42	8.29	2.88	8.17	2.93	8.65	2.97	8.91	3.00	9.19	3.02	9.79	3.06	10.45	3.10
							44	8.29	2.96	8.06	3.00	8.55	3.05	8.82	3.07	9.11	3.09	9.73	3.13	10.40	3.17
							46	8.29	3.03	7.96	3.07	8.47	3.12	8.75	3.14	9.05	3.16	9.68	3.20	10.37	3.24

12. Capacity Table

12-7. AJ140TXJ5KH/EA

COOLING

Combination (Capacity Index)					Combination (Total)	Combination (%)	Outdoor Temperature (°C,DB)	Indoor Temperature(°C, WB)													
								14		16		18		19		20		22		24	
								TC(kW)	PI(kW)	TC(kW)	PI(kW)	TC(kW)	PI(kW)	TC(kW)	PI(kW)	TC(kW)	PI(kW)	TC(kW)	PI(kW)	TC(kW)	PI(kW)
2000	2000	6800			10800	77%	10	9.84	2.57	13.89	2.64	14.15	2.70	14.31	2.73	14.48	2.76	14.89	2.82	15.37	2.87
							12	9.84	2.64	13.51	2.70	13.79	2.76	13.96	2.79	14.14	2.82	14.57	2.88	15.06	2.94
							14	9.84	2.70	13.15	2.77	13.45	2.83	13.63	2.86	13.82	2.89	14.26	2.95	14.78	3.00
							16	9.84	2.77	12.80	2.84	13.12	2.90	13.31	2.93	13.51	2.96	13.98	3.01	14.51	3.07
							18	9.84	2.84	12.47	2.91	12.81	2.97	13.01	3.00	13.22	3.03	13.70	3.08	14.25	3.14
							20	9.84	2.91	12.15	2.98	12.51	3.04	12.72	3.07	12.94	3.10	13.44	3.16	14.02	3.21
							21	9.84	2.95	12.00	3.01	12.37	3.08	12.58	3.11	12.81	3.13	13.32	3.19	13.90	3.25
							23	9.84	3.03	11.71	3.09	12.10	3.15	12.32	3.18	12.55	3.21	13.08	3.27	13.69	3.32
							25	9.84	3.10	11.43	3.17	11.84	3.23	12.07	3.26	12.32	3.29	12.87	3.34	13.49	3.40
							27	9.84	3.18	11.17	3.24	11.60	3.31	11.84	3.34	12.09	3.36	12.66	3.42	13.30	3.47
							29	9.84	3.26	10.92	3.33	11.37	3.39	11.62	3.42	11.88	3.44	12.47	3.50	13.13	3.55
							31	9.84	3.35	10.69	3.41	11.16	3.47	11.42	3.50	11.69	3.53	12.30	3.58	12.98	3.64
							33	9.84	3.43	10.48	3.49	10.96	3.55	11.23	3.58	11.52	3.61	12.14	3.67	12.84	3.72
							35	9.84	3.52	10.28	3.58	10.78	3.64	11.14	3.66	11.35	3.70	12.00	3.75	12.72	3.81
							37	9.84	3.61	10.09	3.67	10.62	3.73	10.90	3.76	11.21	3.79	11.87	3.84	12.61	3.89
							39	9.84	3.70	9.92	3.76	10.47	3.82	10.76	3.85	11.08	3.88	11.76	3.93	12.52	3.98
							42	9.84	3.84	9.70	3.90	10.27	3.96	10.58	3.99	10.91	4.01	11.62	4.07	12.41	4.12
							44	9.84	3.93	9.57	3.99	10.16	4.05	10.48	4.08	10.82	4.11	11.55	4.16	12.35	4.22
							46	9.84	4.03	9.45	4.09	10.06	4.15	10.39	4.18	10.74	4.21	11.49	4.26	12.32	4.31
2000	2500	2500			7000	50%	10	6.48	1.49	9.14	1.53	9.31	1.56	9.41	1.58	9.53	1.60	9.80	1.63	10.11	1.67
							12	6.48	1.53	8.89	1.56	9.07	1.60	9.19	1.62	9.31	1.64	9.59	1.67	9.91	1.70
							14	6.48	1.57	8.65	1.60	8.85	1.64	8.97	1.66	9.09	1.67	9.39	1.71	9.72	1.74
							16	6.48	1.60	8.42	1.64	8.63	1.68	8.76	1.70	8.89	1.71	9.20	1.75	9.55	1.78
							18	6.48	1.65	8.20	1.68	8.43	1.72	8.56	1.74	8.70	1.75	9.02	1.79	9.38	1.82
							20	6.48	1.69	8.00	1.72	8.23	1.76	8.37	1.78	8.52	1.79	8.85	1.83	9.22	1.86
							21	6.48	1.71	7.90	1.75	8.14	1.78	8.28	1.80	8.43	1.82	8.76	1.85	9.15	1.88
							23	6.48	1.75	7.70	1.79	7.96	1.82	8.10	1.84	8.26	1.86	8.61	1.89	9.01	1.92
							25	6.48	1.80	7.52	1.83	7.79	1.87	7.94	1.89	8.10	1.90	8.47	1.94	8.87	1.97
							27	6.48	1.84	7.35	1.88	7.63	1.91	7.79	1.93	7.96	1.95	8.33	1.98	8.75	2.01
							29	6.48	1.89	7.19	1.93	7.48	1.96	7.64	1.98	7.82	2.00	8.21	2.03	8.64	2.06
							31	6.48	1.94	7.04	1.97	7.34	2.01	7.51	2.03	7.69	2.04	8.09	2.08	8.54	2.11
							33	6.48	1.99	6.89	2.02	7.21	2.06	7.39	2.08	7.58	2.09	7.99	2.12	8.45	2.15
							35	6.48	2.04	6.76	2.07	7.09	2.11	7.33	2.12	7.47	2.14	7.90	2.17	8.37	2.20
							37	6.48	2.09	6.64	2.13	6.98	2.16	7.17	2.18	7.38	2.19	7.81	2.22	8.30	2.26
							39	6.48	2.14	6.53	2.18	6.89	2.21	7.08	2.23	7.29	2.24	7.74	2.28	8.24	2.31
							42	6.48	2.22	6.38	2.26	6.76	2.29	6.96	2.31	7.18	2.33	7.65	2.36	8.16	2.39
							44	6.48	2.28	6.30	2.31	6.68	2.35	6.90	2.36	7.12	2.38	7.60	2.41	8.13	2.44
							46	6.48	2.33	6.22	2.37	6.62	2.40	6.84	2.42	7.07	2.44	7.56	2.47	8.10	2.50

12. Capacity Table

12-7. AJ140TXJ5KH/EA

COOLING

Combination (Capacity Index)					Combination (Total)	Combination (%)	Outdoor Temperature (°C,DB)	Indoor Temperature(°C, WB)													
								14		16		18		19		20		22		24	
								TC(kW)	PI(kW)	TC(kW)	PI(kW)	TC(kW)	PI(kW)	TC(kW)	PI(kW)	TC(kW)	PI(kW)	TC(kW)	PI(kW)	TC(kW)	PI(kW)
2000	2500	3500			8000	57%	10	7.26	1.67	10.23	1.71	10.43	1.75	10.55	1.77	10.67	1.79	10.97	1.83	11.32	1.86
							12	7.26	1.71	9.96	1.75	10.16	1.79	10.29	1.81	10.42	1.83	10.74	1.87	11.10	1.90
							14	7.26	1.75	9.69	1.79	9.91	1.83	10.04	1.85	10.19	1.87	10.51	1.91	10.89	1.94
							16	7.26	1.79	9.43	1.84	9.67	1.88	9.81	1.90	9.96	1.91	10.30	1.95	10.69	1.99
							18	7.26	1.84	9.19	1.88	9.44	1.92	9.58	1.94	9.74	1.96	10.10	2.00	10.51	2.03
							20	7.26	1.89	8.96	1.93	9.22	1.97	9.37	1.99	9.54	2.01	9.91	2.04	10.33	2.08
							21	7.26	1.91	8.84	1.95	9.12	1.99	9.27	2.01	9.44	2.03	9.82	2.07	10.25	2.10
							23	7.26	1.96	8.63	2.00	8.91	2.04	9.08	2.06	9.25	2.08	9.64	2.12	10.09	2.15
							25	7.26	2.01	8.42	2.05	8.72	2.09	8.89	2.11	9.08	2.13	9.48	2.16	9.94	2.20
							27	7.26	2.06	8.23	2.10	8.55	2.14	8.72	2.16	8.91	2.18	9.33	2.22	9.80	2.25
							29	7.26	2.11	8.05	2.15	8.38	2.19	8.56	2.21	8.76	2.23	9.19	2.27	9.68	2.30
							31	7.26	2.17	7.88	2.21	8.22	2.25	8.41	2.27	8.62	2.28	9.06	2.32	9.56	2.35
							33	7.26	2.22	7.72	2.26	8.08	2.30	8.28	2.32	8.49	2.34	8.95	2.37	9.46	2.41
							35	7.26	2.28	7.57	2.32	7.94	2.36	8.21	2.37	8.37	2.39	8.84	2.43	9.37	2.46
							37	7.26	2.34	7.44	2.38	7.82	2.41	8.04	2.43	8.26	2.45	8.75	2.49	9.29	2.52
							39	7.26	2.39	7.31	2.43	7.71	2.47	7.93	2.49	8.16	2.51	8.67	2.55	9.22	2.58
							42	7.26	2.49	7.15	2.52	7.57	2.56	7.80	2.58	8.04	2.60	8.57	2.63	9.14	2.67
							44	7.26	2.55	7.05	2.59	7.49	2.62	7.72	2.64	7.97	2.66	8.51	2.70	9.11	2.73
							46	7.26	2.61	6.97	2.65	7.42	2.69	7.66	2.71	7.92	2.72	8.47	2.76	9.08	2.79
2000	2500	5000			9500	68%	10	8.80	2.03	12.42	2.08	12.65	2.13	12.79	2.16	12.95	2.18	13.31	2.23	13.74	2.27
							12	8.80	2.08	12.08	2.13	12.33	2.18	12.48	2.21	12.65	2.23	13.03	2.28	13.47	2.32
							14	8.80	2.13	11.75	2.18	12.02	2.23	12.18	2.26	12.36	2.28	12.75	2.33	13.21	2.37
							16	8.80	2.19	11.44	2.24	11.73	2.29	11.90	2.31	12.08	2.34	12.49	2.38	12.97	2.42
							18	8.80	2.24	11.15	2.29	11.45	2.34	11.63	2.37	11.82	2.39	12.25	2.44	12.74	2.48
							20	8.80	2.30	10.87	2.35	11.19	2.40	11.37	2.42	11.57	2.45	12.02	2.49	12.53	2.54
							21	8.80	2.33	10.73	2.38	11.06	2.43	11.25	2.45	11.45	2.48	11.91	2.52	12.43	2.56
							23	8.80	2.39	10.47	2.44	10.81	2.49	11.01	2.51	11.22	2.53	11.70	2.58	12.24	2.62
							25	8.80	2.45	10.22	2.50	10.58	2.55	10.79	2.57	11.01	2.59	11.50	2.64	12.06	2.68
							27	8.80	2.51	9.99	2.56	10.37	2.61	10.58	2.63	10.81	2.66	11.32	2.70	11.89	2.74
							29	8.80	2.58	9.77	2.63	10.16	2.67	10.39	2.70	10.63	2.72	11.15	2.76	11.74	2.81
							31	8.80	2.64	9.56	2.69	9.97	2.74	10.21	2.76	10.45	2.78	11.00	2.83	11.60	2.87
							33	8.80	2.71	9.37	2.76	9.80	2.81	10.04	2.83	10.30	2.85	10.86	2.90	11.48	2.94
							35	8.80	2.78	9.19	2.83	9.64	2.87	9.96	2.89	10.15	2.92	10.73	2.96	11.37	3.01
							37	8.80	2.85	9.02	2.90	9.49	2.94	9.75	2.97	10.02	2.99	10.62	3.03	11.27	3.07
							39	8.80	2.92	8.87	2.97	9.36	3.02	9.62	3.04	9.90	3.06	10.52	3.10	11.19	3.15
							42	8.80	3.03	8.67	3.08	9.18	3.13	9.46	3.15	9.76	3.17	10.39	3.21	11.09	3.25
							44	8.80	3.11	8.56	3.15	9.08	3.20	9.37	3.22	9.67	3.24	10.33	3.29	11.05	3.33
							46	8.80	3.18	8.45	3.23	9.00	3.28	9.29	3.30	9.61	3.32	10.28	3.36	11.01	3.40

12. Capacity Table

12-7. AJ140TXJ5KH/EA

COOLING

Combination (Capacity Index)					Combination (Total)	Combination (%)	Outdoor Temperature (°C,DB)	Indoor Temperature(°C, WB)													
								14		16		18		19		20		22		24	
								TC(kW)	PI(kW)	TC(kW)	PI(kW)	TC(kW)	PI(kW)	TC(kW)	PI(kW)	TC(kW)	PI(kW)	TC(kW)	PI(kW)	TC(kW)	PI(kW)
2000	2500	6800			11300	81%	10	10.25	2.63	14.46	2.69	14.73	2.76	14.90	2.79	15.08	2.82	15.50	2.88	16.00	2.94
							12	10.25	2.69	14.07	2.76	14.36	2.82	14.54	2.85	14.73	2.89	15.17	2.94	15.69	3.00
							14	10.25	2.76	13.69	2.83	14.00	2.89	14.19	2.92	14.39	2.95	14.85	3.01	15.39	3.07
							16	10.25	2.83	13.33	2.90	13.66	2.96	13.86	2.99	14.07	3.02	14.55	3.08	15.11	3.14
							18	10.25	2.90	12.98	2.97	13.34	3.03	13.54	3.06	13.77	3.09	14.27	3.15	14.84	3.21
							20	10.25	2.98	12.65	3.04	13.03	3.11	13.24	3.14	13.48	3.17	14.00	3.22	14.59	3.28
							21	10.25	3.01	12.50	3.08	12.88	3.14	13.10	3.17	13.34	3.20	13.87	3.26	14.48	3.32
							23	10.25	3.09	12.19	3.16	12.60	3.22	12.82	3.25	13.07	3.28	13.63	3.34	14.25	3.39
							25	10.25	3.17	11.90	3.24	12.33	3.30	12.57	3.33	12.82	3.36	13.40	3.42	14.04	3.47
							27	10.25	3.25	11.63	3.32	12.07	3.38	12.32	3.41	12.59	3.44	13.18	3.50	13.85	3.55
							29	10.25	3.33	11.37	3.40	11.84	3.46	12.10	3.49	12.38	3.52	12.99	3.58	13.67	3.63
							31	10.25	3.42	11.13	3.48	11.62	3.54	11.89	3.57	12.18	3.60	12.81	3.66	13.51	3.72
							33	10.25	3.51	10.91	3.57	11.41	3.63	11.69	3.66	11.99	3.69	12.64	3.75	13.37	3.80
							35	10.25	3.59	10.70	3.66	11.23	3.72	11.60	3.74	11.82	3.78	12.50	3.83	13.24	3.89
							37	10.25	3.69	10.51	3.75	11.05	3.81	11.35	3.84	11.67	3.87	12.36	3.92	13.13	3.98
							39	10.25	3.78	10.33	3.84	10.90	3.90	11.21	3.93	11.54	3.96	12.25	4.02	13.03	4.07
							42	10.25	3.92	10.10	3.98	10.69	4.04	11.02	4.07	11.36	4.10	12.10	4.16	12.92	4.21
							44	10.25	4.02	9.96	4.08	10.58	4.14	10.91	4.17	11.27	4.20	12.03	4.25	12.87	4.31
							46	10.25	4.12	9.85	4.18	10.48	4.24	10.82	4.27	11.19	4.30	11.97	4.35	12.83	4.41
2000	3500	3500			9000	64%	10	8.03	1.92	11.33	1.97	11.55	2.01	11.68	2.04	11.82	2.06	12.15	2.10	12.54	2.14
							12	8.03	1.97	11.02	2.01	11.25	2.06	11.39	2.08	11.54	2.11	11.89	2.15	12.29	2.19
							14	8.03	2.02	10.73	2.06	10.97	2.11	11.12	2.13	11.28	2.16	11.64	2.20	12.06	2.24
							16	8.03	2.07	10.44	2.11	10.71	2.16	10.86	2.18	11.03	2.21	11.40	2.25	11.84	2.29
							18	8.03	2.12	10.17	2.17	10.45	2.21	10.61	2.24	10.79	2.26	11.18	2.30	11.63	2.34
							20	8.03	2.17	9.92	2.22	10.21	2.27	10.38	2.29	10.56	2.31	10.97	2.35	11.44	2.39
							21	8.03	2.20	9.79	2.25	10.09	2.29	10.27	2.32	10.45	2.34	10.87	2.38	11.34	2.42
							23	8.03	2.26	9.55	2.30	9.87	2.35	10.05	2.37	10.24	2.39	10.68	2.44	11.17	2.48
							25	8.03	2.31	9.33	2.36	9.66	2.41	9.85	2.43	10.05	2.45	10.50	2.49	11.00	2.53
							27	8.03	2.37	9.11	2.42	9.46	2.47	9.66	2.49	9.87	2.51	10.33	2.55	10.85	2.59
							29	8.03	2.43	8.91	2.48	9.28	2.53	9.48	2.55	9.70	2.57	10.18	2.61	10.71	2.65
							31	8.03	2.50	8.72	2.54	9.10	2.59	9.32	2.61	9.54	2.63	10.04	2.67	10.59	2.71
							33	8.03	2.56	8.55	2.61	8.94	2.65	9.16	2.67	9.40	2.69	9.91	2.74	10.48	2.78
							35	8.03	2.62	8.39	2.67	8.80	2.71	9.09	2.73	9.26	2.76	9.79	2.80	10.38	2.84
							37	8.03	2.69	8.24	2.74	8.66	2.78	8.90	2.80	9.15	2.82	9.69	2.86	10.29	2.90
							39	8.03	2.76	8.10	2.80	8.54	2.85	8.78	2.87	9.04	2.89	9.60	2.93	10.21	2.97
							42	8.03	2.86	7.91	2.91	8.38	2.95	8.63	2.97	8.90	2.99	9.49	3.04	10.12	3.07
							44	8.03	2.93	7.81	2.98	8.29	3.02	8.55	3.04	8.83	3.07	9.43	3.11	10.08	3.14
							46	8.03	3.01	7.72	3.05	8.21	3.10	8.48	3.12	8.77	3.14	9.38	3.18	10.05	3.22

12. Capacity Table

12-7. AJ140TXJ5KH/EA

COOLING

Combination (Capacity Index)					Combination (Total)	Combination (%)	Outdoor Temperature (°C,DB)	Indoor Temperature(°C, WB)													
								14		16		18		19		20		22		24	
								TC(kW)	PI(kW)	TC(kW)	PI(kW)	TC(kW)	PI(kW)	TC(kW)	PI(kW)	TC(kW)	PI(kW)	TC(kW)	PI(kW)	TC(kW)	PI(kW)
2000	3500	5000			10500	75%	10	9.58	2.38	13.51	2.44	13.77	2.50	13.92	2.53	14.09	2.56	14.49	2.61	14.95	2.66
							12	9.58	2.44	13.15	2.50	13.42	2.56	13.58	2.59	13.76	2.62	14.18	2.67	14.66	2.72
							14	9.58	2.50	12.79	2.56	13.09	2.62	13.26	2.65	13.45	2.68	13.88	2.73	14.38	2.78
							16	9.58	2.57	12.46	2.63	12.77	2.68	12.95	2.71	13.15	2.74	13.60	2.79	14.12	2.84
							18	9.58	2.63	12.13	2.69	12.46	2.75	12.65	2.78	12.86	2.80	13.33	2.86	13.87	2.91
							20	9.58	2.70	11.83	2.76	12.17	2.81	12.38	2.84	12.59	2.87	13.08	2.92	13.64	2.97
							21	9.58	2.73	11.68	2.79	12.04	2.85	12.24	2.88	12.46	2.90	12.96	2.96	13.53	3.01
							23	9.58	2.80	11.39	2.86	11.77	2.92	11.98	2.95	12.22	2.97	12.73	3.03	13.32	3.08
							25	9.58	2.87	11.12	2.93	11.52	2.99	11.74	3.02	11.98	3.04	12.52	3.10	13.12	3.15
							27	9.58	2.95	10.87	3.01	11.28	3.06	11.52	3.09	11.77	3.12	12.32	3.17	12.94	3.22
							29	9.58	3.02	10.63	3.08	11.06	3.14	11.30	3.16	11.56	3.19	12.14	3.24	12.78	3.29
							31	9.58	3.10	10.40	3.16	10.86	3.21	11.11	3.24	11.38	3.27	11.97	3.32	12.63	3.37
							33	9.58	3.18	10.19	3.24	10.67	3.29	10.93	3.32	11.21	3.34	11.81	3.40	12.49	3.45
							35	9.58	3.26	10.00	3.32	10.49	3.37	10.84	3.39	11.05	3.42	11.68	3.48	12.37	3.53
							37	9.58	3.34	9.82	3.40	10.33	3.45	10.61	3.48	10.91	3.51	11.55	3.56	12.27	3.61
							39	9.58	3.42	9.66	3.48	10.18	3.54	10.47	3.56	10.78	3.59	11.45	3.64	12.18	3.69
							42	9.58	3.55	9.44	3.61	9.99	3.67	10.30	3.69	10.62	3.72	11.31	3.77	12.07	3.82
							44	9.58	3.64	9.31	3.70	9.89	3.75	10.20	3.78	10.53	3.81	11.24	3.86	12.02	3.90
							46	9.58	3.73	9.20	3.79	9.79	3.84	10.11	3.87	10.45	3.90	11.19	3.95	11.99	3.99
2000	3500	6800			12300	88%	10	10.25	2.72	14.46	2.79	14.73	2.85	14.90	2.89	15.08	2.92	15.50	2.98	16.00	3.04
							12	10.25	2.79	14.07	2.86	14.36	2.92	14.54	2.95	14.73	2.99	15.17	3.05	15.69	3.11
							14	10.25	2.86	13.69	2.93	14.00	2.99	14.19	3.02	14.39	3.06	14.85	3.12	15.39	3.18
							16	10.25	2.93	13.33	3.00	13.66	3.06	13.86	3.10	14.07	3.13	14.55	3.19	15.11	3.25
							18	10.25	3.00	12.98	3.07	13.34	3.14	13.54	3.17	13.77	3.20	14.27	3.26	14.84	3.32
							20	10.25	3.08	12.65	3.15	13.03	3.21	13.24	3.25	13.48	3.28	14.00	3.34	14.59	3.40
							21	10.25	3.12	12.50	3.19	12.88	3.25	13.10	3.28	13.34	3.31	13.87	3.38	14.48	3.43
							23	10.25	3.20	12.19	3.27	12.60	3.33	12.82	3.36	13.07	3.39	13.63	3.45	14.25	3.51
							25	10.25	3.28	11.90	3.35	12.33	3.41	12.57	3.44	12.82	3.47	13.40	3.53	14.04	3.59
							27	10.25	3.36	11.63	3.43	12.07	3.50	12.32	3.53	12.59	3.56	13.18	3.62	13.85	3.67
							29	10.25	3.45	11.37	3.52	11.84	3.58	12.10	3.61	12.38	3.64	12.99	3.70	13.67	3.76
							31	10.25	3.54	11.13	3.60	11.62	3.67	11.89	3.70	12.18	3.73	12.81	3.79	13.51	3.85
							33	10.25	3.63	10.91	3.69	11.41	3.76	11.69	3.79	11.99	3.82	12.64	3.88	13.37	3.93
							35	10.25	3.72	10.70	3.79	11.23	3.85	11.60	3.87	11.82	3.91	12.50	3.97	13.24	4.02
							37	10.25	3.81	10.51	3.88	11.05	3.94	11.35	3.97	11.67	4.00	12.36	4.06	13.13	4.12
							39	10.25	3.91	10.33	3.97	10.90	4.04	11.21	4.07	11.54	4.10	12.25	4.16	13.03	4.21
							42	10.25	4.06	10.10	4.12	10.69	4.18	11.02	4.22	11.36	4.24	12.10	4.30	12.92	4.36
							44	10.25	4.16	9.96	4.22	10.58	4.29	10.91	4.32	11.27	4.35	12.03	4.40	12.87	4.46
							46	10.25	4.26	9.85	4.33	10.48	4.39	10.82	4.42	11.19	4.45	11.97	4.50	12.83	4.56

12. Capacity Table

12-7. AJ140TXJ5KH/EA

COOLING

Combination (Capacity Index)					Combination (Total)	Combination (%)	Outdoor Temperature (°C,DB)	Indoor Temperature(°C, WB)													
								14		16		18		19		20		22		24	
								TC(kW)	PI(kW)	TC(kW)	PI(kW)	TC(kW)	PI(kW)	TC(kW)	PI(kW)	TC(kW)	PI(kW)	TC(kW)	PI(kW)	TC(kW)	PI(kW)
2000	5000	5000			12000	86%	10	10.25	2.72	14.46	2.79	14.73	2.85	14.90	2.89	15.08	2.92	15.50	2.98	16.00	3.04
							12	10.25	2.79	14.07	2.86	14.36	2.92	14.54	2.95	14.73	2.99	15.17	3.05	15.69	3.11
							14	10.25	2.86	13.69	2.93	14.00	2.99	14.19	3.02	14.39	3.06	14.85	3.12	15.39	3.18
							16	10.25	2.93	13.33	3.00	13.66	3.06	13.86	3.10	14.07	3.13	14.55	3.19	15.11	3.25
							18	10.25	3.00	12.98	3.07	13.34	3.14	13.54	3.17	13.77	3.20	14.27	3.26	14.84	3.32
							20	10.25	3.08	12.65	3.15	13.03	3.21	13.24	3.25	13.48	3.28	14.00	3.34	14.59	3.40
							21	10.25	3.12	12.50	3.19	12.88	3.25	13.10	3.28	13.34	3.31	13.87	3.38	14.48	3.43
							23	10.25	3.20	12.19	3.27	12.60	3.33	12.82	3.36	13.07	3.39	13.63	3.45	14.25	3.51
							25	10.25	3.28	11.90	3.35	12.33	3.41	12.57	3.44	12.82	3.47	13.40	3.53	14.04	3.59
							27	10.25	3.36	11.63	3.43	12.07	3.50	12.32	3.53	12.59	3.56	13.18	3.62	13.85	3.67
							29	10.25	3.45	11.37	3.52	11.84	3.58	12.10	3.61	12.38	3.64	12.99	3.70	13.67	3.76
							31	10.25	3.54	11.13	3.60	11.62	3.67	11.89	3.70	12.18	3.73	12.81	3.79	13.51	3.85
							33	10.25	3.63	10.91	3.69	11.41	3.76	11.69	3.79	11.99	3.82	12.64	3.88	13.37	3.93
							35	10.25	3.72	10.70	3.79	11.23	3.85	11.60	3.87	11.82	3.91	12.50	3.97	13.24	4.02
							37	10.25	3.81	10.51	3.88	11.05	3.94	11.35	3.97	11.67	4.00	12.36	4.06	13.13	4.12
							39	10.25	3.91	10.33	3.97	10.90	4.04	11.21	4.07	11.54	4.10	12.25	4.16	13.03	4.21
							42	10.25	4.06	10.10	4.12	10.69	4.18	11.02	4.22	11.36	4.24	12.10	4.30	12.92	4.36
							44	10.25	4.16	9.96	4.22	10.58	4.29	10.91	4.32	11.27	4.35	12.03	4.40	12.87	4.46
							46	10.25	4.26	9.85	4.33	10.48	4.39	10.82	4.42	11.19	4.45	11.97	4.50	12.83	4.56
2000	5000	6800			13800	99%	10	13.04	2.72	13.56	2.77	14.08	2.83	14.34	2.86	14.60	2.89	15.14	2.95	15.68	3.00
							12	12.82	2.79	13.33	2.85	13.85	2.90	14.11	2.93	14.38	2.96	14.92	3.02	15.46	3.08
							14	12.59	2.86	13.10	2.92	13.63	2.98	13.89	3.01	14.16	3.04	14.69	3.10	15.24	3.16
							16	12.37	2.94	12.88	3.00	13.40	3.06	13.67	3.09	13.93	3.11	14.47	3.17	15.02	3.23
							18	12.14	3.01	12.66	3.07	13.18	3.13	13.45	3.16	13.71	3.19	14.25	3.25	14.80	3.31
							20	11.92	3.09	12.43	3.15	12.96	3.21	13.22	3.24	13.49	3.27	14.03	3.33	14.58	3.39
							21	11.80	3.13	12.32	3.19	12.85	3.25	13.11	3.28	13.38	3.31	13.92	3.37	14.47	3.43
							23	11.58	3.21	12.10	3.27	12.63	3.33	12.89	3.36	13.16	3.39	13.70	3.45	14.25	3.51
							25	11.36	3.29	11.88	3.35	12.41	3.42	12.67	3.45	12.94	3.48	13.48	3.54	14.03	3.60
							27	11.14	3.38	11.66	3.44	12.19	3.50	12.45	3.53	12.72	3.56	13.27	3.62	13.82	3.68
							29	10.91	3.46	11.44	3.52	11.97	3.58	12.23	3.61	12.50	3.65	13.05	3.71	13.60	3.77
							31	10.69	3.55	11.22	3.61	11.75	3.67	12.01	3.70	12.28	3.73	12.83	3.79	13.38	3.86
							33	10.47	3.63	11.00	3.70	11.53	3.76	11.80	3.79	12.07	3.82	12.61	3.88	13.17	3.94
							35	10.25	3.72	10.78	3.78	11.31	3.85	11.60	3.87	11.85	3.91	12.40	3.97	12.95	4.04
							37	10.03	3.81	10.56	3.87	11.09	3.94	11.36	3.97	11.63	4.00	12.18	4.06	12.74	4.13
							39	9.81	3.90	10.34	3.97	10.88	4.03	11.15	4.06	11.42	4.09	11.97	4.16	12.52	4.22
							42	9.49	4.04	10.02	4.11	10.55	4.17	10.82	4.20	11.10	4.23	11.65	4.30	12.21	4.36
							44	9.27	4.14	9.80	4.20	10.34	4.26	10.61	4.30	10.88	4.33	11.43	4.39	11.99	4.46
							46	9.05	4.23	9.58	4.30	10.12	4.36	10.39	4.39	10.67	4.43	11.22	4.49	11.78	4.56

12. Capacity Table

12-7. AJ140TXJ5KH/EA

COOLING

Combination (Capacity Index)					Combination (Total)	Combination (%)	Outdoor Temperature (°C,DB)	Indoor Temperature(°C, WB)													
								14		16		18		19		20		22		24	
								TC(kW)	PI(kW)	TC(kW)	PI(kW)	TC(kW)	PI(kW)	TC(kW)	PI(kW)	TC(kW)	PI(kW)	TC(kW)	PI(kW)	TC(kW)	PI(kW)
							10	13.61	2.74	14.14	2.80	14.68	2.86	14.96	2.89	15.23	2.92	15.79	2.98	16.36	3.04
							12	13.37	2.82	13.90	2.88	14.45	2.93	14.72	2.96	15.00	2.99	15.56	3.05	16.13	3.11
							14	13.13	2.89	13.67	2.95	14.21	3.01	14.49	3.04	14.77	3.07	15.33	3.13	15.90	3.19
							16	12.90	2.97	13.44	3.03	13.98	3.09	14.26	3.12	14.53	3.15	15.10	3.21	15.67	3.27
							18	12.66	3.05	13.20	3.11	13.75	3.17	14.03	3.20	14.30	3.23	14.87	3.29	15.44	3.35
							20	12.43	3.12	12.97	3.18	13.52	3.25	13.79	3.28	14.07	3.31	14.64	3.37	15.21	3.43
							21	12.31	3.16	12.85	3.22	13.40	3.29	13.68	3.32	13.96	3.35	14.52	3.41	15.09	3.47
							23	12.08	3.25	12.62	3.31	13.17	3.37	13.45	3.40	13.73	3.43	14.29	3.49	14.87	3.55
							25	11.85	3.33	12.39	3.39	12.94	3.45	13.22	3.48	13.50	3.51	14.06	3.57	14.64	3.63
2000	6800	6800			15600	111%	27	11.62	3.41	12.16	3.47	12.71	3.54	12.99	3.57	13.27	3.60	13.84	3.66	14.41	3.72
							29	11.39	3.50	11.93	3.56	12.48	3.62	12.76	3.65	13.04	3.68	13.61	3.75	14.19	3.81
							31	11.15	3.58	11.70	3.65	12.25	3.71	12.53	3.74	12.81	3.77	13.38	3.83	13.96	3.90
							33	10.92	3.67	11.47	3.73	12.02	3.80	12.30	3.83	12.59	3.86	13.16	3.92	13.74	3.99
							35	10.70	3.76	11.24	3.82	11.80	3.89	12.10	3.91	12.36	3.95	12.93	4.01	13.51	4.08
							37	10.47	3.85	11.01	3.91	11.57	3.98	11.85	4.01	12.14	4.04	12.71	4.11	13.29	4.17
							39	10.24	3.94	10.79	4.01	11.34	4.07	11.63	4.10	11.91	4.13	12.48	4.20	13.06	4.26
							42	9.90	4.08	10.45	4.15	11.01	4.21	11.29	4.24	11.57	4.28	12.15	4.34	12.73	4.41
							44	9.67	4.18	10.22	4.24	10.78	4.31	11.06	4.34	11.35	4.37	11.93	4.44	12.51	4.50
							46	9.44	4.27	10.00	4.34	10.56	4.41	10.84	4.44	11.13	4.47	11.70	4.54	12.29	4.60
							10	6.99	1.56	9.86	1.60	10.05	1.64	10.16	1.66	10.28	1.67	10.57	1.71	10.91	1.74
							12	6.99	1.60	9.59	1.64	9.79	1.68	9.91	1.69	10.04	1.71	10.34	1.75	10.70	1.78
							14	6.99	1.64	9.34	1.68	9.55	1.72	9.68	1.73	9.81	1.75	10.13	1.79	10.49	1.82
							16	6.99	1.68	9.09	1.72	9.32	1.76	9.45	1.78	9.59	1.79	9.92	1.83	10.30	1.86
							18	6.99	1.72	8.85	1.76	9.09	1.80	9.23	1.82	9.39	1.84	9.73	1.87	10.12	1.90
							20	6.99	1.77	8.63	1.81	8.88	1.84	9.03	1.86	9.19	1.88	9.55	1.91	9.95	1.95
							21	6.99	1.79	8.52	1.83	8.78	1.87	8.93	1.88	9.10	1.90	9.46	1.94	9.87	1.97
							23	6.99	1.84	8.31	1.87	8.59	1.91	8.75	1.93	8.91	1.95	9.29	1.98	9.72	2.01
							25	6.99	1.88	8.12	1.92	8.41	1.96	8.57	1.98	8.74	1.99	9.13	2.03	9.58	2.06
2500	2500	2500			7500	54%	27	6.99	1.93	7.93	1.97	8.23	2.01	8.40	2.02	8.59	2.04	8.99	2.07	9.44	2.11
							29	6.99	1.98	7.76	2.02	8.07	2.05	8.25	2.07	8.44	2.09	8.86	2.12	9.32	2.16
							31	6.99	2.03	7.59	2.07	7.92	2.10	8.11	2.12	8.30	2.14	8.73	2.17	9.21	2.21
							33	6.99	2.08	7.44	2.12	7.78	2.16	7.97	2.17	8.18	2.19	8.62	2.22	9.12	2.26
							35	6.99	2.13	7.30	2.17	7.65	2.21	7.91	2.22	8.06	2.24	8.52	2.28	9.03	2.31
							37	6.99	2.19	7.17	2.23	7.54	2.26	7.74	2.28	7.96	2.30	8.43	2.33	8.95	2.36
							39	6.99	2.24	7.05	2.28	7.43	2.32	7.64	2.33	7.87	2.35	8.35	2.38	8.89	2.42
							42	6.99	2.33	6.89	2.36	7.29	2.40	7.51	2.42	7.75	2.43	8.25	2.47	8.81	2.50
							44	6.99	2.39	6.79	2.42	7.21	2.46	7.44	2.48	7.68	2.49	8.20	2.53	8.77	2.56
							46	6.99	2.45	6.71	2.48	7.15	2.52	7.38	2.53	7.63	2.55	8.16	2.58	8.75	2.62

12. Capacity Table

12-7. AJ140TXJ5KH/EA

COOLING

Combination (Capacity Index)					Combination (Total)	Combination (%)	Outdoor Temperature (°C,DB)	Indoor Temperature(°C, WB)													
								14		16		18		19		20		22		24	
								TC(kW)	PI(kW)	TC(kW)	PI(kW)	TC(kW)	PI(kW)	TC(kW)	PI(kW)	TC(kW)	PI(kW)	TC(kW)	PI(kW)	TC(kW)	PI(kW)
2500	2500	3500			8500	61%	10	7.77	1.77	10.96	1.82	11.17	1.86	11.29	1.88	11.43	1.90	11.75	1.94	12.12	1.98
							12	7.77	1.81	10.66	1.86	10.88	1.90	11.01	1.92	11.16	1.94	11.50	1.98	11.89	2.02
							14	7.77	1.86	10.37	1.91	10.61	1.95	10.75	1.97	10.91	1.99	11.26	2.03	11.66	2.07
							16	7.77	1.91	10.10	1.95	10.35	1.99	10.50	2.02	10.66	2.04	11.03	2.08	11.45	2.11
							18	7.77	1.96	9.84	2.00	10.11	2.04	10.26	2.06	10.43	2.08	10.81	2.12	11.25	2.16
							20	7.77	2.01	9.59	2.05	9.87	2.09	10.04	2.11	10.21	2.13	10.61	2.17	11.06	2.21
							21	7.77	2.03	9.47	2.08	9.76	2.12	9.93	2.14	10.11	2.16	10.51	2.20	10.97	2.24
							23	7.77	2.08	9.24	2.13	9.54	2.17	9.72	2.19	9.91	2.21	10.32	2.25	10.80	2.29
							25	7.77	2.14	9.02	2.18	9.34	2.22	9.52	2.24	9.72	2.26	10.15	2.30	10.64	2.34
							27	7.77	2.19	8.81	2.23	9.15	2.28	9.34	2.30	9.54	2.32	9.99	2.36	10.49	2.39
							29	7.77	2.25	8.62	2.29	8.97	2.33	9.17	2.35	9.38	2.37	9.84	2.41	10.36	2.45
							31	7.77	2.30	8.44	2.35	8.80	2.39	9.01	2.41	9.23	2.43	9.70	2.47	10.24	2.50
							33	7.77	2.36	8.27	2.41	8.65	2.45	8.86	2.47	9.09	2.49	9.58	2.52	10.13	2.56
							35	7.77	2.42	8.11	2.46	8.51	2.51	8.79	2.52	8.96	2.55	9.47	2.58	10.03	2.62
							37	7.77	2.48	7.96	2.53	8.38	2.57	8.60	2.59	8.84	2.61	9.37	2.64	9.95	2.68
							39	7.77	2.55	7.83	2.59	8.26	2.63	8.49	2.65	8.74	2.67	9.28	2.71	9.88	2.74
							42	7.77	2.64	7.65	2.68	8.10	2.72	8.35	2.74	8.61	2.76	9.17	2.80	9.79	2.84
							44	7.77	2.71	7.55	2.75	8.02	2.79	8.27	2.81	8.54	2.83	9.12	2.87	9.75	2.90
							46	7.77	2.78	7.46	2.82	7.94	2.86	8.20	2.88	8.48	2.90	9.07	2.93	9.72	2.97
2500	2500	5000			10000	71%	10	9.32	2.14	13.15	2.20	13.40	2.25	13.55	2.27	13.72	2.30	14.10	2.35	14.55	2.40
							12	9.32	2.20	12.79	2.25	13.06	2.30	13.22	2.33	13.40	2.35	13.80	2.40	14.27	2.45
							14	9.32	2.25	12.45	2.31	12.74	2.36	12.90	2.38	13.09	2.41	13.51	2.46	14.00	2.50
							16	9.32	2.31	12.12	2.36	12.43	2.41	12.60	2.44	12.80	2.46	13.23	2.51	13.74	2.56
							18	9.32	2.37	11.81	2.42	12.13	2.47	12.32	2.50	12.52	2.52	12.98	2.57	13.50	2.62
							20	9.32	2.43	11.51	2.48	11.85	2.53	12.04	2.56	12.26	2.58	12.73	2.63	13.27	2.68
							21	9.32	2.46	11.37	2.51	11.71	2.56	11.91	2.59	12.13	2.61	12.61	2.66	13.17	2.71
							23	9.32	2.52	11.09	2.57	11.46	2.63	11.66	2.65	11.89	2.67	12.39	2.72	12.96	2.77
							25	9.32	2.59	10.83	2.64	11.21	2.69	11.43	2.71	11.66	2.74	12.18	2.79	12.77	2.83
							27	9.32	2.65	10.58	2.70	10.98	2.75	11.21	2.78	11.45	2.80	11.99	2.85	12.60	2.90
							29	9.32	2.72	10.34	2.77	10.77	2.82	11.00	2.85	11.26	2.87	11.81	2.92	12.44	2.96
							31	9.32	2.79	10.13	2.84	10.57	2.89	10.81	2.92	11.07	2.94	11.65	2.99	12.29	3.03
							33	9.32	2.86	9.92	2.91	10.38	2.96	10.63	2.99	10.91	3.01	11.50	3.06	12.16	3.10
							35	9.32	2.93	9.73	2.98	10.21	3.03	10.55	3.05	10.75	3.08	11.36	3.13	12.04	3.17
							37	9.32	3.01	9.56	3.06	10.05	3.11	10.33	3.13	10.61	3.15	11.24	3.20	11.94	3.24
							39	9.32	3.08	9.40	3.13	9.91	3.18	10.19	3.21	10.49	3.23	11.14	3.28	11.85	3.32
							42	9.32	3.20	9.19	3.25	9.73	3.30	10.02	3.32	10.33	3.35	11.01	3.39	11.75	3.43
							44	9.32	3.28	9.06	3.33	9.62	3.38	9.93	3.40	10.25	3.42	10.94	3.47	11.70	3.51
							46	9.32	3.36	8.95	3.41	9.53	3.46	9.84	3.48	10.17	3.51	10.89	3.55	11.66	3.59

12. Capacity Table

12-7. AJ140TXJ5KH/EA

COOLING

Combination (Capacity Index)					Combination (Total)	Combination (%)	Outdoor Temperature (°C,DB)	Indoor Temperature(°C, WB)													
								14		16		18		19		20		22		24	
								TC(kW)	PI(kW)	TC(kW)	PI(kW)	TC(kW)	PI(kW)	TC(kW)	PI(kW)	TC(kW)	PI(kW)	TC(kW)	PI(kW)	TC(kW)	PI(kW)
2500	2500	6800			11800	84%	10	10.25	2.66	14.46	2.72	14.73	2.79	14.90	2.82	15.08	2.85	15.50	2.91	16.00	2.97
							12	10.25	2.72	14.07	2.79	14.36	2.85	14.54	2.89	14.73	2.92	15.17	2.98	15.69	3.03
							14	10.25	2.79	13.69	2.86	14.00	2.92	14.19	2.95	14.39	2.98	14.85	3.04	15.39	3.10
							16	10.25	2.86	13.33	2.93	13.66	2.99	13.86	3.02	14.07	3.05	14.55	3.11	15.11	3.17
							18	10.25	2.93	12.98	3.00	13.34	3.06	13.54	3.10	13.77	3.13	14.27	3.19	14.84	3.24
							20	10.25	3.01	12.65	3.07	13.03	3.14	13.24	3.17	13.48	3.20	14.00	3.26	14.59	3.32
							21	10.25	3.05	12.50	3.11	12.88	3.18	13.10	3.21	13.34	3.24	13.87	3.30	14.48	3.35
							23	10.25	3.12	12.19	3.19	12.60	3.25	12.82	3.28	13.07	3.31	13.63	3.37	14.25	3.43
							25	10.25	3.20	11.90	3.27	12.33	3.33	12.57	3.36	12.82	3.39	13.40	3.45	14.04	3.51
							27	10.25	3.29	11.63	3.35	12.07	3.41	12.32	3.44	12.59	3.47	13.18	3.53	13.85	3.59
							29	10.25	3.37	11.37	3.43	11.84	3.50	12.10	3.53	12.38	3.56	12.99	3.62	13.67	3.67
							31	10.25	3.46	11.13	3.52	11.62	3.58	11.89	3.61	12.18	3.64	12.81	3.70	13.51	3.76
							33	10.25	3.54	10.91	3.61	11.41	3.67	11.69	3.70	11.99	3.73	12.64	3.79	13.37	3.84
							35	10.25	3.63	10.70	3.70	11.23	3.76	11.60	3.78	11.82	3.82	12.50	3.88	13.24	3.93
							37	10.25	3.73	10.51	3.79	11.05	3.85	11.35	3.88	11.67	3.91	12.36	3.97	13.13	4.02
							39	10.25	3.82	10.33	3.88	10.90	3.94	11.21	3.97	11.54	4.00	12.25	4.06	13.03	4.11
							42	10.25	3.96	10.10	4.03	10.69	4.09	11.02	4.12	11.36	4.15	12.10	4.20	12.92	4.26
							44	10.25	4.06	9.96	4.13	10.58	4.19	10.91	4.22	11.27	4.24	12.03	4.30	12.87	4.35
							46	10.25	4.16	9.85	4.23	10.48	4.29	10.82	4.32	11.19	4.34	11.97	4.40	12.83	4.45
2500	3500	3500			9500	68%	10	8.55	2.02	12.05	2.07	12.28	2.12	12.42	2.14	12.57	2.16	12.92	2.21	13.34	2.25
							12	8.55	2.07	11.73	2.12	11.97	2.17	12.12	2.19	12.28	2.21	12.65	2.26	13.08	2.30
							14	8.55	2.12	11.41	2.17	11.67	2.22	11.83	2.24	12.00	2.27	12.38	2.31	12.83	2.36
							16	8.55	2.17	11.11	2.22	11.39	2.27	11.55	2.30	11.73	2.32	12.13	2.36	12.59	2.41
							18	8.55	2.23	10.82	2.28	11.12	2.33	11.29	2.35	11.48	2.37	11.89	2.42	12.37	2.46
							20	8.55	2.28	10.55	2.33	10.86	2.38	11.04	2.41	11.23	2.43	11.67	2.47	12.17	2.52
							21	8.55	2.31	10.42	2.36	10.74	2.41	10.92	2.44	11.12	2.46	11.56	2.50	12.07	2.55
							23	8.55	2.37	10.16	2.42	10.50	2.47	10.69	2.49	10.90	2.52	11.36	2.56	11.88	2.60
							25	8.55	2.43	9.92	2.48	10.28	2.53	10.48	2.55	10.69	2.58	11.17	2.62	11.71	2.66
							27	8.55	2.50	9.70	2.54	10.07	2.59	10.27	2.62	10.50	2.64	10.99	2.68	11.55	2.72
							29	8.55	2.56	9.48	2.61	9.87	2.66	10.08	2.68	10.32	2.70	10.83	2.75	11.40	2.79
							31	8.55	2.62	9.28	2.67	9.68	2.72	9.91	2.74	10.15	2.77	10.68	2.81	11.27	2.85
							33	8.55	2.69	9.09	2.74	9.51	2.79	9.75	2.81	10.00	2.83	10.54	2.88	11.14	2.92
							35	8.55	2.76	8.92	2.81	9.36	2.85	9.67	2.87	9.86	2.90	10.42	2.94	11.04	2.98
							37	8.55	2.83	8.76	2.88	9.21	2.92	9.46	2.95	9.73	2.97	10.31	3.01	10.95	3.05
							39	8.55	2.90	8.61	2.95	9.08	2.99	9.34	3.02	9.62	3.04	10.21	3.08	10.87	3.12
							42	8.55	3.01	8.42	3.06	8.91	3.10	9.19	3.13	9.47	3.15	10.09	3.19	10.77	3.23
							44	8.55	3.08	8.31	3.13	8.82	3.18	9.10	3.20	9.39	3.22	10.03	3.26	10.72	3.31
							46	8.55	3.16	8.21	3.21	8.74	3.25	9.02	3.28	9.33	3.30	9.98	3.34	10.69	3.38

12. Capacity Table

12-7. AJ140TXJ5KH/EA

COOLING

Combination (Capacity Index)					Combination (Total)	Combination (%)	Outdoor Temperature (°C,DB)	Indoor Temperature(°C, WB)													
								14		16		18		19		20		22		24	
								TC(kW)	PI(kW)	TC(kW)	PI(kW)	TC(kW)	PI(kW)	TC(kW)	PI(kW)	TC(kW)	PI(kW)	TC(kW)	PI(kW)	TC(kW)	PI(kW)
2500	3500	5000			11000	79%	10	10.10	2.60	14.25	2.67	14.52	2.73	14.68	2.76	14.86	2.79	15.28	2.85	15.77	2.91
							12	10.10	2.66	13.86	2.73	14.15	2.79	14.32	2.82	14.51	2.85	14.95	2.91	15.46	2.97
							14	10.10	2.73	13.49	2.80	13.80	2.86	13.98	2.89	14.18	2.92	14.64	2.98	15.16	3.04
							16	10.10	2.80	13.13	2.87	13.46	2.93	13.65	2.96	13.86	2.99	14.34	3.05	14.89	3.10
							18	10.10	2.87	12.79	2.94	13.14	3.00	13.34	3.03	13.56	3.06	14.06	3.12	14.63	3.17
							20	10.10	2.95	12.47	3.01	12.84	3.07	13.05	3.10	13.28	3.13	13.79	3.19	14.38	3.25
							21	10.10	2.98	12.31	3.05	12.69	3.11	12.91	3.14	13.14	3.17	13.67	3.23	14.26	3.28
							23	10.10	3.06	12.01	3.12	12.41	3.18	12.64	3.21	12.88	3.24	13.43	3.30	14.04	3.36
							25	10.10	3.14	11.73	3.20	12.15	3.26	12.38	3.29	12.64	3.32	13.20	3.38	13.84	3.43
							27	10.10	3.22	11.46	3.28	11.90	3.34	12.14	3.37	12.41	3.40	12.99	3.46	13.65	3.51
							29	10.10	3.30	11.21	3.36	11.66	3.42	11.92	3.45	12.19	3.48	12.80	3.54	13.47	3.59
							31	10.10	3.38	10.97	3.45	11.45	3.51	11.71	3.54	12.00	3.57	12.62	3.62	13.32	3.68
							33	10.10	3.47	10.75	3.53	11.25	3.59	11.52	3.62	11.82	3.65	12.46	3.71	13.17	3.76
							35	10.10	3.56	10.54	3.62	11.06	3.68	11.43	3.70	11.65	3.74	12.31	3.79	13.05	3.85
							37	10.10	3.65	10.36	3.71	10.89	3.77	11.19	3.80	11.50	3.83	12.18	3.88	12.94	3.94
							39	10.10	3.74	10.18	3.80	10.74	3.86	11.04	3.89	11.37	3.92	12.07	3.97	12.84	4.03
							42	10.10	3.88	9.95	3.94	10.54	4.00	10.86	4.03	11.20	4.06	11.93	4.11	12.73	4.17
							44	10.10	3.98	9.82	4.04	10.42	4.10	10.75	4.13	11.10	4.15	11.85	4.21	12.68	4.26
							46	10.10	4.08	9.70	4.14	10.33	4.20	10.67	4.22	11.02	4.25	11.79	4.31	12.64	4.36
2500	3500	6800			12800	91%	10	10.25	2.72	14.46	2.79	14.73	2.85	14.90	2.89	15.08	2.92	15.50	2.98	16.00	3.04
							12	10.25	2.79	14.07	2.86	14.36	2.92	14.54	2.95	14.73	2.99	15.17	3.05	15.69	3.11
							14	10.25	2.86	13.69	2.93	14.00	2.99	14.19	3.02	14.39	3.06	14.85	3.12	15.39	3.18
							16	10.25	2.93	13.33	3.00	13.66	3.06	13.86	3.10	14.07	3.13	14.55	3.19	15.11	3.25
							18	10.25	3.00	12.98	3.07	13.34	3.14	13.54	3.17	13.77	3.20	14.27	3.26	14.84	3.32
							20	10.25	3.08	12.65	3.15	13.03	3.21	13.24	3.25	13.48	3.28	14.00	3.34	14.59	3.40
							21	10.25	3.12	12.50	3.19	12.88	3.25	13.10	3.28	13.34	3.31	13.87	3.38	14.48	3.43
							23	10.25	3.20	12.19	3.27	12.60	3.33	12.82	3.36	13.07	3.39	13.63	3.45	14.25	3.51
							25	10.25	3.28	11.90	3.35	12.33	3.41	12.57	3.44	12.82	3.47	13.40	3.53	14.04	3.59
							27	10.25	3.36	11.63	3.43	12.07	3.50	12.32	3.53	12.59	3.56	13.18	3.62	13.85	3.67
							29	10.25	3.45	11.37	3.52	11.84	3.58	12.10	3.61	12.38	3.64	12.99	3.70	13.67	3.76
							31	10.25	3.54	11.13	3.60	11.62	3.67	11.89	3.70	12.18	3.73	12.81	3.79	13.51	3.85
							33	10.25	3.63	10.91	3.69	11.41	3.76	11.69	3.79	11.99	3.82	12.64	3.88	13.37	3.93
							35	10.25	3.72	10.70	3.79	11.23	3.85	11.60	3.87	11.82	3.91	12.50	3.97	13.24	4.02
							37	10.25	3.81	10.51	3.88	11.05	3.94	11.35	3.97	11.67	4.00	12.36	4.06	13.13	4.12
							39	10.25	3.91	10.33	3.97	10.90	4.04	11.21	4.07	11.54	4.10	12.25	4.16	13.03	4.21
							42	10.25	4.06	10.10	4.12	10.69	4.18	11.02	4.22	11.36	4.24	12.10	4.30	12.92	4.36
							44	10.25	4.16	9.96	4.22	10.58	4.29	10.91	4.32	11.27	4.35	12.03	4.40	12.87	4.46
							46	10.25	4.26	9.85	4.33	10.48	4.39	10.82	4.42	11.19	4.45	11.97	4.50	12.83	4.56

12. Capacity Table

12-7. AJ140TXJ5KH/EA

COOLING

Combination (Capacity Index)					Combination (Total)	Combination (%)	Outdoor Temperature (°C,DB)	Indoor Temperature(°C, WB)													
								14		16		18		19		20		22		24	
								TC(kW)	PI(kW)	TC(kW)	PI(kW)	TC(kW)	PI(kW)	TC(kW)	PI(kW)	TC(kW)	PI(kW)	TC(kW)	PI(kW)	TC(kW)	PI(kW)
2500	5000	5000			12500	89%	10	10.25	2.72	14.46	2.79	14.73	2.85	14.90	2.89	15.08	2.92	15.50	2.98	16.00	3.04
							12	10.25	2.79	14.07	2.86	14.36	2.92	14.54	2.95	14.73	2.99	15.17	3.05	15.69	3.11
							14	10.25	2.86	13.69	2.93	14.00	2.99	14.19	3.02	14.39	3.06	14.85	3.12	15.39	3.18
							16	10.25	2.93	13.33	3.00	13.66	3.06	13.86	3.10	14.07	3.13	14.55	3.19	15.11	3.25
							18	10.25	3.00	12.98	3.07	13.34	3.14	13.54	3.17	13.77	3.20	14.27	3.26	14.84	3.32
							20	10.25	3.08	12.65	3.15	13.03	3.21	13.24	3.25	13.48	3.28	14.00	3.34	14.59	3.40
							21	10.25	3.12	12.50	3.19	12.88	3.25	13.10	3.28	13.34	3.31	13.87	3.38	14.48	3.43
							23	10.25	3.20	12.19	3.27	12.60	3.33	12.82	3.36	13.07	3.39	13.63	3.45	14.25	3.51
							25	10.25	3.28	11.90	3.35	12.33	3.41	12.57	3.44	12.82	3.47	13.40	3.53	14.04	3.59
							27	10.25	3.36	11.63	3.43	12.07	3.50	12.32	3.53	12.59	3.56	13.18	3.62	13.85	3.67
							29	10.25	3.45	11.37	3.52	11.84	3.58	12.10	3.61	12.38	3.64	12.99	3.70	13.67	3.76
							31	10.25	3.54	11.13	3.60	11.62	3.67	11.89	3.70	12.18	3.73	12.81	3.79	13.51	3.85
							33	10.25	3.63	10.91	3.69	11.41	3.76	11.69	3.79	11.99	3.82	12.64	3.88	13.37	3.93
							35	10.25	3.72	10.70	3.79	11.23	3.85	11.60	3.87	11.82	3.91	12.50	3.97	13.24	4.02
							37	10.25	3.81	10.51	3.88	11.05	3.94	11.35	3.97	11.67	4.00	12.36	4.06	13.13	4.12
							39	10.25	3.91	10.33	3.97	10.90	4.04	11.21	4.07	11.54	4.10	12.25	4.16	13.03	4.21
							42	10.25	4.06	10.10	4.12	10.69	4.18	11.02	4.22	11.36	4.24	12.10	4.30	12.92	4.36
							44	10.25	4.16	9.96	4.22	10.58	4.29	10.91	4.32	11.27	4.35	12.03	4.40	12.87	4.46
							46	10.25	4.26	9.85	4.33	10.48	4.39	10.82	4.42	11.19	4.45	11.97	4.50	12.83	4.56
2500	5000	6800			14300	102%	10	13.61	2.74	14.14	2.80	14.68	2.86	14.96	2.89	15.23	2.92	15.79	2.98	16.36	3.04
							12	13.37	2.82	13.90	2.88	14.45	2.93	14.72	2.96	15.00	2.99	15.56	3.05	16.13	3.11
							14	13.13	2.89	13.67	2.95	14.21	3.01	14.49	3.04	14.77	3.07	15.33	3.13	15.90	3.19
							16	12.90	2.97	13.44	3.03	13.98	3.09	14.26	3.12	14.53	3.15	15.10	3.21	15.67	3.27
							18	12.66	3.05	13.20	3.11	13.75	3.17	14.03	3.20	14.30	3.23	14.87	3.29	15.44	3.35
							20	12.43	3.12	12.97	3.18	13.52	3.25	13.79	3.28	14.07	3.31	14.64	3.37	15.21	3.43
							21	12.31	3.16	12.85	3.22	13.40	3.29	13.68	3.32	13.96	3.35	14.52	3.41	15.09	3.47
							23	12.08	3.25	12.62	3.31	13.17	3.37	13.45	3.40	13.73	3.43	14.29	3.49	14.87	3.55
							25	11.85	3.33	12.39	3.39	12.94	3.45	13.22	3.48	13.50	3.51	14.06	3.57	14.64	3.63
							27	11.62	3.41	12.16	3.47	12.71	3.54	12.99	3.57	13.27	3.60	13.84	3.66	14.41	3.72
							29	11.39	3.50	11.93	3.56	12.48	3.62	12.76	3.65	13.04	3.68	13.61	3.75	14.19	3.81
							31	11.15	3.58	11.70	3.65	12.25	3.71	12.53	3.74	12.81	3.77	13.38	3.83	13.96	3.90
							33	10.92	3.67	11.47	3.73	12.02	3.80	12.30	3.83	12.59	3.86	13.16	3.92	13.74	3.99
							35	10.70	3.76	11.24	3.82	11.80	3.89	12.10	3.91	12.36	3.95	12.93	4.01	13.51	4.08
							37	10.47	3.85	11.01	3.91	11.57	3.98	11.85	4.01	12.14	4.04	12.71	4.11	13.29	4.17
							39	10.24	3.94	10.79	4.01	11.34	4.07	11.63	4.10	11.91	4.13	12.48	4.20	13.06	4.26
							42	9.90	4.08	10.45	4.15	11.01	4.21	11.29	4.24	11.57	4.28	12.15	4.34	12.73	4.41
							44	9.67	4.18	10.22	4.24	10.78	4.31	11.06	4.34	11.35	4.37	11.93	4.44	12.51	4.50
							46	9.44	4.27	10.00	4.34	10.56	4.41	10.84	4.44	11.13	4.47	11.70	4.54	12.29	4.60

12. Capacity Table

12-7. AJ140TXJ5KH/EA

COOLING

Combination (Capacity Index)					Combination (Total)	Combination (%)	Outdoor Temperature (°C,DB)	Indoor Temperature(°C, WB)													
								14		16		18		19		20		22		24	
								TC(kW)	PI(kW)	TC(kW)	PI(kW)	TC(kW)	PI(kW)	TC(kW)	PI(kW)	TC(kW)	PI(kW)	TC(kW)	PI(kW)	TC(kW)	PI(kW)
2500	6800	6800			16100	115%	10	13.61	2.74	14.14	2.80	14.68	2.86	14.96	2.89	15.23	2.92	15.79	2.98	16.36	3.04
							12	13.37	2.82	13.90	2.88	14.45	2.93	14.72	2.96	15.00	2.99	15.56	3.05	16.13	3.11
							14	13.13	2.89	13.67	2.95	14.21	3.01	14.49	3.04	14.77	3.07	15.33	3.13	15.90	3.19
							16	12.90	2.97	13.44	3.03	13.98	3.09	14.26	3.12	14.53	3.15	15.10	3.21	15.67	3.27
							18	12.66	3.05	13.20	3.11	13.75	3.17	14.03	3.20	14.30	3.23	14.87	3.29	15.44	3.35
							20	12.43	3.12	12.97	3.18	13.52	3.25	13.79	3.28	14.07	3.31	14.64	3.37	15.21	3.43
							21	12.31	3.16	12.85	3.22	13.40	3.29	13.68	3.32	13.96	3.35	14.52	3.41	15.09	3.47
							23	12.08	3.25	12.62	3.31	13.17	3.37	13.45	3.40	13.73	3.43	14.29	3.49	14.87	3.55
							25	11.85	3.33	12.39	3.39	12.94	3.45	13.22	3.48	13.50	3.51	14.06	3.57	14.64	3.63
							27	11.62	3.41	12.16	3.47	12.71	3.54	12.99	3.57	13.27	3.60	13.84	3.66	14.41	3.72
							29	11.39	3.50	11.93	3.56	12.48	3.62	12.76	3.65	13.04	3.68	13.61	3.75	14.19	3.81
							31	11.15	3.58	11.70	3.65	12.25	3.71	12.53	3.74	12.81	3.77	13.38	3.83	13.96	3.90
							33	10.92	3.67	11.47	3.73	12.02	3.80	12.30	3.83	12.59	3.86	13.16	3.92	13.74	3.99
							35	10.70	3.76	11.24	3.82	11.80	3.89	12.10	3.91	12.36	3.95	12.93	4.01	13.51	4.08
							37	10.47	3.85	11.01	3.91	11.57	3.98	11.85	4.01	12.14	4.04	12.71	4.11	13.29	4.17
							39	10.24	3.94	10.79	4.01	11.34	4.07	11.63	4.10	11.91	4.13	12.48	4.20	13.06	4.26
							42	9.90	4.08	10.45	4.15	11.01	4.21	11.29	4.24	11.57	4.28	12.15	4.34	12.73	4.41
							44	9.67	4.18	10.22	4.24	10.78	4.31	11.06	4.34	11.35	4.37	11.93	4.44	12.51	4.50
							46	9.44	4.27	10.00	4.34	10.56	4.41	10.84	4.44	11.13	4.47	11.70	4.54	12.29	4.60
3500	3500	3500			10500	75%	10	9.32	2.37	13.15	2.43	13.40	2.49	13.55	2.51	13.72	2.54	14.10	2.60	14.55	2.65
							12	9.32	2.43	12.79	2.49	13.06	2.54	13.22	2.57	13.40	2.60	13.80	2.65	14.27	2.71
							14	9.32	2.49	12.45	2.55	12.74	2.61	12.90	2.63	13.09	2.66	13.51	2.71	14.00	2.77
							16	9.32	2.55	12.12	2.61	12.43	2.67	12.60	2.70	12.80	2.72	13.23	2.78	13.74	2.83
							18	9.32	2.62	11.81	2.68	12.13	2.73	12.32	2.76	12.52	2.79	12.98	2.84	13.50	2.89
							20	9.32	2.68	11.51	2.74	11.85	2.80	12.04	2.83	12.26	2.85	12.73	2.91	13.27	2.96
							21	9.32	2.72	11.37	2.78	11.71	2.83	11.91	2.86	12.13	2.89	12.61	2.94	13.17	2.99
							23	9.32	2.79	11.09	2.84	11.46	2.90	11.66	2.93	11.89	2.96	12.39	3.01	12.96	3.06
							25	9.32	2.86	10.83	2.92	11.21	2.97	11.43	3.00	11.66	3.03	12.18	3.08	12.77	3.13
							27	9.32	2.93	10.58	2.99	10.98	3.04	11.21	3.07	11.45	3.10	11.99	3.15	12.60	3.20
							29	9.32	3.00	10.34	3.06	10.77	3.12	11.00	3.15	11.26	3.17	11.81	3.22	12.44	3.27
							31	9.32	3.08	10.13	3.14	10.57	3.19	10.81	3.22	11.07	3.25	11.65	3.30	12.29	3.35
							33	9.32	3.16	9.92	3.22	10.38	3.27	10.63	3.30	10.91	3.33	11.50	3.38	12.16	3.43
							35	9.32	3.24	9.73	3.30	10.21	3.35	10.55	3.37	10.75	3.40	11.36	3.46	12.04	3.50
							37	9.32	3.32	9.56	3.38	10.05	3.43	10.33	3.46	10.61	3.49	11.24	3.54	11.94	3.59
							39	9.32	3.40	9.40	3.46	9.91	3.52	10.19	3.54	10.49	3.57	11.14	3.62	11.85	3.67
							42	9.32	3.53	9.19	3.59	9.73	3.64	10.02	3.67	10.33	3.70	11.01	3.75	11.75	3.79
							44	9.32	3.62	9.06	3.68	9.62	3.73	9.93	3.76	10.25	3.78	10.94	3.83	11.70	3.88
							46	9.32	3.71	8.95	3.77	9.53	3.82	9.84	3.85	10.17	3.87	10.89	3.92	11.66	3.97

12. Capacity Table

12-7. AJ140TXJ5KH/EA

COOLING

Combination (Capacity Index)					Combination (Total)	Combination (%)	Outdoor Temperature (°C,DB)	Indoor Temperature(°C, WB)													
								14		16		18		19		20		22		24	
								TC(kW)	PI(kW)	TC(kW)	PI(kW)	TC(kW)	PI(kW)	TC(kW)	PI(kW)	TC(kW)	PI(kW)	TC(kW)	PI(kW)	TC(kW)	PI(kW)
3500	3500	5000			12000	86%	10	10.25	2.68	14.46	2.75	14.73	2.82	14.90	2.85	15.08	2.88	15.50	2.94	16.00	3.00
							12	10.25	2.75	14.07	2.82	14.36	2.88	14.54	2.92	14.73	2.95	15.17	3.01	15.69	3.07
							14	10.25	2.82	13.69	2.89	14.00	2.95	14.19	2.98	14.39	3.02	14.85	3.08	15.39	3.13
							16	10.25	2.89	13.33	2.96	13.66	3.02	13.86	3.06	14.07	3.09	14.55	3.15	15.11	3.20
							18	10.25	2.97	12.98	3.03	13.34	3.10	13.54	3.13	13.77	3.16	14.27	3.22	14.84	3.28
							20	10.25	3.04	12.65	3.11	13.03	3.17	13.24	3.20	13.48	3.23	14.00	3.29	14.59	3.35
							21	10.25	3.08	12.50	3.15	12.88	3.21	13.10	3.24	13.34	3.27	13.87	3.33	14.48	3.39
							23	10.25	3.16	12.19	3.22	12.60	3.29	12.82	3.32	13.07	3.35	13.63	3.41	14.25	3.47
							25	10.25	3.24	11.90	3.30	12.33	3.37	12.57	3.40	12.82	3.43	13.40	3.49	14.04	3.55
							27	10.25	3.32	11.63	3.39	12.07	3.45	12.32	3.48	12.59	3.51	13.18	3.57	13.85	3.63
							29	10.25	3.41	11.37	3.47	11.84	3.53	12.10	3.57	12.38	3.60	12.99	3.65	13.67	3.71
							31	10.25	3.49	11.13	3.56	11.62	3.62	11.89	3.65	12.18	3.68	12.81	3.74	13.51	3.80
							33	10.25	3.58	10.91	3.65	11.41	3.71	11.69	3.74	11.99	3.77	12.64	3.83	13.37	3.88
							35	10.25	3.67	10.70	3.74	11.23	3.80	11.60	3.82	11.82	3.86	12.50	3.92	13.24	3.97
							37	10.25	3.76	10.51	3.83	11.05	3.89	11.35	3.92	11.67	3.95	12.36	4.01	13.13	4.06
							39	10.25	3.86	10.33	3.92	10.90	3.99	11.21	4.02	11.54	4.05	12.25	4.10	13.03	4.16
							42	10.25	4.01	10.10	4.07	10.69	4.13	11.02	4.16	11.36	4.19	12.10	4.25	12.92	4.30
							44	10.25	4.11	9.96	4.17	10.58	4.23	10.91	4.26	11.27	4.29	12.03	4.35	12.87	4.40
							46	10.25	4.21	9.85	4.27	10.48	4.33	10.82	4.36	11.19	4.39	11.97	4.45	12.83	4.50
3500	3500	6800			13800	99%	10	13.04	2.72	13.56	2.77	14.08	2.83	14.34	2.86	14.60	2.89	15.14	2.95	15.68	3.00
							12	12.82	2.79	13.33	2.85	13.85	2.90	14.11	2.93	14.38	2.96	14.92	3.02	15.46	3.08
							14	12.59	2.86	13.10	2.92	13.63	2.98	13.89	3.01	14.16	3.04	14.69	3.10	15.24	3.16
							16	12.37	2.94	12.88	3.00	13.40	3.06	13.67	3.09	13.93	3.11	14.47	3.17	15.02	3.23
							18	12.14	3.01	12.66	3.07	13.18	3.13	13.45	3.16	13.71	3.19	14.25	3.25	14.80	3.31
							20	11.92	3.09	12.43	3.15	12.96	3.21	13.22	3.24	13.49	3.27	14.03	3.33	14.58	3.39
							21	11.80	3.13	12.32	3.19	12.85	3.25	13.11	3.28	13.38	3.31	13.92	3.37	14.47	3.43
							23	11.58	3.21	12.10	3.27	12.63	3.33	12.89	3.36	13.16	3.39	13.70	3.45	14.25	3.51
							25	11.36	3.29	11.88	3.35	12.41	3.42	12.67	3.45	12.94	3.48	13.48	3.54	14.03	3.60
							27	11.14	3.38	11.66	3.44	12.19	3.50	12.45	3.53	12.72	3.56	13.27	3.62	13.82	3.68
							29	10.91	3.46	11.44	3.52	11.97	3.58	12.23	3.61	12.50	3.65	13.05	3.71	13.60	3.77
							31	10.69	3.55	11.22	3.61	11.75	3.67	12.01	3.70	12.28	3.73	12.83	3.79	13.38	3.86
							33	10.47	3.63	11.00	3.70	11.53	3.76	11.80	3.79	12.07	3.82	12.61	3.88	13.17	3.94
							35	10.25	3.72	10.78	3.78	11.31	3.85	11.60	3.87	11.85	3.91	12.40	3.97	12.95	4.04
							37	10.03	3.81	10.56	3.87	11.09	3.94	11.36	3.97	11.63	4.00	12.18	4.06	12.74	4.13
							39	9.81	3.90	10.34	3.97	10.88	4.03	11.15	4.06	11.42	4.09	11.97	4.16	12.52	4.22
							42	9.49	4.04	10.02	4.11	10.55	4.17	10.82	4.20	11.10	4.23	11.65	4.30	12.21	4.36
							44	9.27	4.14	9.80	4.20	10.34	4.26	10.61	4.30	10.88	4.33	11.43	4.39	11.99	4.46
							46	9.05	4.23	9.58	4.30	10.12	4.36	10.39	4.39	10.67	4.43	11.22	4.49	11.78	4.56

12. Capacity Table

12-7. AJ140TXJ5KH/EA

COOLING

Combination (Capacity Index)					Combination (Total)	Combination (%)	Outdoor Temperature (°C,DB)	Indoor Temperature(°C, WB)													
								14		16		18		19		20		22		24	
								TC(kW)	PI(kW)	TC(kW)	PI(kW)	TC(kW)	PI(kW)	TC(kW)	PI(kW)	TC(kW)	PI(kW)	TC(kW)	PI(kW)	TC(kW)	PI(kW)
3500	5000	5000			13500	96%	10	13.04	2.72	13.56	2.77	14.08	2.83	14.34	2.86	14.60	2.89	15.14	2.95	15.68	3.00
							12	12.82	2.79	13.33	2.85	13.85	2.90	14.11	2.93	14.38	2.96	14.92	3.02	15.46	3.08
							14	12.59	2.86	13.10	2.92	13.63	2.98	13.89	3.01	14.16	3.04	14.69	3.10	15.24	3.16
							16	12.37	2.94	12.88	3.00	13.40	3.06	13.67	3.09	13.93	3.11	14.47	3.17	15.02	3.23
							18	12.14	3.01	12.66	3.07	13.18	3.13	13.45	3.16	13.71	3.19	14.25	3.25	14.80	3.31
							20	11.92	3.09	12.43	3.15	12.96	3.21	13.22	3.24	13.49	3.27	14.03	3.33	14.58	3.39
							21	11.80	3.13	12.32	3.19	12.85	3.25	13.11	3.28	13.38	3.31	13.92	3.37	14.47	3.43
							23	11.58	3.21	12.10	3.27	12.63	3.33	12.89	3.36	13.16	3.39	13.70	3.45	14.25	3.51
							25	11.36	3.29	11.88	3.35	12.41	3.42	12.67	3.45	12.94	3.48	13.48	3.54	14.03	3.60
							27	11.14	3.38	11.66	3.44	12.19	3.50	12.45	3.53	12.72	3.56	13.27	3.62	13.82	3.68
							29	10.91	3.46	11.44	3.52	11.97	3.58	12.23	3.61	12.50	3.65	13.05	3.71	13.60	3.77
							31	10.69	3.55	11.22	3.61	11.75	3.67	12.01	3.70	12.28	3.73	12.83	3.79	13.38	3.86
							33	10.47	3.63	11.00	3.70	11.53	3.76	11.80	3.79	12.07	3.82	12.61	3.88	13.17	3.94
							35	10.25	3.72	10.78	3.78	11.31	3.85	11.60	3.87	11.85	3.91	12.40	3.97	12.95	4.04
							37	10.03	3.81	10.56	3.87	11.09	3.94	11.36	3.97	11.63	4.00	12.18	4.06	12.74	4.13
							39	9.81	3.90	10.34	3.97	10.88	4.03	11.15	4.06	11.42	4.09	11.97	4.16	12.52	4.22
							42	9.49	4.04	10.02	4.11	10.55	4.17	10.82	4.20	11.10	4.23	11.65	4.30	12.21	4.36
							44	9.27	4.14	9.80	4.20	10.34	4.26	10.61	4.30	10.88	4.33	11.43	4.39	11.99	4.46
							46	9.05	4.23	9.58	4.30	10.12	4.36	10.39	4.39	10.67	4.43	11.22	4.49	11.78	4.56
3500	5000	6800			15300	109%	10	13.61	2.74	14.14	2.80	14.68	2.86	14.96	2.89	15.23	2.92	15.79	2.98	16.36	3.04
							12	13.37	2.82	13.90	2.88	14.45	2.93	14.72	2.96	15.00	2.99	15.56	3.05	16.13	3.11
							14	13.13	2.89	13.67	2.95	14.21	3.01	14.49	3.04	14.77	3.07	15.33	3.13	15.90	3.19
							16	12.90	2.97	13.44	3.03	13.98	3.09	14.26	3.12	14.53	3.15	15.10	3.21	15.67	3.27
							18	12.66	3.05	13.20	3.11	13.75	3.17	14.03	3.20	14.30	3.23	14.87	3.29	15.44	3.35
							20	12.43	3.12	12.97	3.18	13.52	3.25	13.79	3.28	14.07	3.31	14.64	3.37	15.21	3.43
							21	12.31	3.16	12.85	3.22	13.40	3.29	13.68	3.32	13.96	3.35	14.52	3.41	15.09	3.47
							23	12.08	3.25	12.62	3.31	13.17	3.37	13.45	3.40	13.73	3.43	14.29	3.49	14.87	3.55
							25	11.85	3.33	12.39	3.39	12.94	3.45	13.22	3.48	13.50	3.51	14.06	3.57	14.64	3.63
							27	11.62	3.41	12.16	3.47	12.71	3.54	12.99	3.57	13.27	3.60	13.84	3.66	14.41	3.72
							29	11.39	3.50	11.93	3.56	12.48	3.62	12.76	3.65	13.04	3.68	13.61	3.75	14.19	3.81
							31	11.15	3.58	11.70	3.65	12.25	3.71	12.53	3.74	12.81	3.77	13.38	3.83	13.96	3.90
							33	10.92	3.67	11.47	3.73	12.02	3.80	12.30	3.83	12.59	3.86	13.16	3.92	13.74	3.99
							35	10.70	3.76	11.24	3.82	11.80	3.89	12.10	3.91	12.36	3.95	12.93	4.01	13.51	4.08
							37	10.47	3.85	11.01	3.91	11.57	3.98	11.85	4.01	12.14	4.04	12.71	4.11	13.29	4.17
							39	10.24	3.94	10.79	4.01	11.34	4.07	11.63	4.10	11.91	4.13	12.48	4.20	13.06	4.26
							42	9.90	4.08	10.45	4.15	11.01	4.21	11.29	4.24	11.57	4.28	12.15	4.34	12.73	4.41
							44	9.67	4.18	10.22	4.24	10.78	4.31	11.06	4.34	11.35	4.37	11.93	4.44	12.51	4.50
							46	9.44	4.27	10.00	4.34	10.56	4.41	10.84	4.44	11.13	4.47	11.70	4.54	12.29	4.60

12. Capacity Table

12-7. AJ140TXJ5KH/EA

COOLING

Combination (Capacity Index)					Combination (Total)	Combination (%)	Outdoor Temperature (°C,DB)	Indoor Temperature(°C, WB)													
								14		16		18		19		20		22		24	
								TC(kW)	PI(kW)	TC(kW)	PI(kW)	TC(kW)	PI(kW)	TC(kW)	PI(kW)	TC(kW)	PI(kW)	TC(kW)	PI(kW)	TC(kW)	PI(kW)
3500	6800	6800			17100	122%	10	13.61	2.74	14.14	2.80	14.68	2.86	14.96	2.89	15.23	2.92	15.79	2.98	16.36	3.04
							12	13.37	2.82	13.90	2.88	14.45	2.93	14.72	2.96	15.00	2.99	15.56	3.05	16.13	3.11
							14	13.13	2.89	13.67	2.95	14.21	3.01	14.49	3.04	14.77	3.07	15.33	3.13	15.90	3.19
							16	12.90	2.97	13.44	3.03	13.98	3.09	14.26	3.12	14.53	3.15	15.10	3.21	15.67	3.27
							18	12.66	3.05	13.20	3.11	13.75	3.17	14.03	3.20	14.30	3.23	14.87	3.29	15.44	3.35
							20	12.43	3.12	12.97	3.18	13.52	3.25	13.79	3.28	14.07	3.31	14.64	3.37	15.21	3.43
							21	12.31	3.16	12.85	3.22	13.40	3.29	13.68	3.32	13.96	3.35	14.52	3.41	15.09	3.47
							23	12.08	3.25	12.62	3.31	13.17	3.37	13.45	3.40	13.73	3.43	14.29	3.49	14.87	3.55
							25	11.85	3.33	12.39	3.39	12.94	3.45	13.22	3.48	13.50	3.51	14.06	3.57	14.64	3.63
							27	11.62	3.41	12.16	3.47	12.71	3.54	12.99	3.57	13.27	3.60	13.84	3.66	14.41	3.72
							29	11.39	3.50	11.93	3.56	12.48	3.62	12.76	3.65	13.04	3.68	13.61	3.75	14.19	3.81
							31	11.15	3.58	11.70	3.65	12.25	3.71	12.53	3.74	12.81	3.77	13.38	3.83	13.96	3.90
							33	10.92	3.67	11.47	3.73	12.02	3.80	12.30	3.83	12.59	3.86	13.16	3.92	13.74	3.99
							35	10.70	3.76	11.24	3.82	11.80	3.89	12.10	3.91	12.36	3.95	12.93	4.01	13.51	4.08
							37	10.47	3.85	11.01	3.91	11.57	3.98	11.85	4.01	12.14	4.04	12.71	4.11	13.29	4.17
							39	10.24	3.94	10.79	4.01	11.34	4.07	11.63	4.10	11.91	4.13	12.48	4.20	13.06	4.26
							42	9.90	4.08	10.45	4.15	11.01	4.21	11.29	4.24	11.57	4.28	12.15	4.34	12.73	4.41
							44	9.67	4.18	10.22	4.24	10.78	4.31	11.06	4.34	11.35	4.37	11.93	4.44	12.51	4.50
							46	9.44	4.27	10.00	4.34	10.56	4.41	10.84	4.44	11.13	4.47	11.70	4.54	12.29	4.60
5000	5000	5000			15000	107%	10	13.61	2.74	14.14	2.80	14.68	2.86	14.96	2.89	15.23	2.92	15.79	2.98	16.36	3.04
							12	13.37	2.82	13.90	2.88	14.45	2.93	14.72	2.96	15.00	2.99	15.56	3.05	16.13	3.11
							14	13.13	2.89	13.67	2.95	14.21	3.01	14.49	3.04	14.77	3.07	15.33	3.13	15.90	3.19
							16	12.90	2.97	13.44	3.03	13.98	3.09	14.26	3.12	14.53	3.15	15.10	3.21	15.67	3.27
							18	12.66	3.05	13.20	3.11	13.75	3.17	14.03	3.20	14.30	3.23	14.87	3.29	15.44	3.35
							20	12.43	3.12	12.97	3.18	13.52	3.25	13.79	3.28	14.07	3.31	14.64	3.37	15.21	3.43
							21	12.31	3.16	12.85	3.22	13.40	3.29	13.68	3.32	13.96	3.35	14.52	3.41	15.09	3.47
							23	12.08	3.25	12.62	3.31	13.17	3.37	13.45	3.40	13.73	3.43	14.29	3.49	14.87	3.55
							25	11.85	3.33	12.39	3.39	12.94	3.45	13.22	3.48	13.50	3.51	14.06	3.57	14.64	3.63
							27	11.62	3.41	12.16	3.47	12.71	3.54	12.99	3.57	13.27	3.60	13.84	3.66	14.41	3.72
							29	11.39	3.50	11.93	3.56	12.48	3.62	12.76	3.65	13.04	3.68	13.61	3.75	14.19	3.81
							31	11.15	3.58	11.70	3.65	12.25	3.71	12.53	3.74	12.81	3.77	13.38	3.83	13.96	3.90
							33	10.92	3.67	11.47	3.73	12.02	3.80	12.30	3.83	12.59	3.86	13.16	3.92	13.74	3.99
							35	10.70	3.76	11.24	3.82	11.80	3.89	12.10	3.91	12.36	3.95	12.93	4.01	13.51	4.08
							37	10.47	3.85	11.01	3.91	11.57	3.98	11.85	4.01	12.14	4.04	12.71	4.11	13.29	4.17
							39	10.24	3.94	10.79	4.01	11.34	4.07	11.63	4.10	11.91	4.13	12.48	4.20	13.06	4.26
							42	9.90	4.08	10.45	4.15	11.01	4.21	11.29	4.24	11.57	4.28	12.15	4.34	12.73	4.41
							44	9.67	4.18	10.22	4.24	10.78	4.31	11.06	4.34	11.35	4.37	11.93	4.44	12.51	4.50
							46	9.44	4.27	10.00	4.34	10.56	4.41	10.84	4.44	11.13	4.47	11.70	4.54	12.29	4.60

12. Capacity Table

12-7. AJ140TXJ5KH/EA

COOLING

Combination (Capacity Index)					Combination (Total)	Combination (%)	Outdoor Temperature (°C,DB)	Indoor Temperature(°C, WB)													
								14		16		18		19		20		22		24	
								TC(kW)	PI(kW)	TC(kW)	PI(kW)	TC(kW)	PI(kW)	TC(kW)	PI(kW)	TC(kW)	PI(kW)	TC(kW)	PI(kW)	TC(kW)	PI(kW)
5000	5000	6800			16800	120%	10	13.61	2.74	14.14	2.80	14.68	2.86	14.96	2.89	15.23	2.92	15.79	2.98	16.36	3.04
							12	13.37	2.82	13.90	2.88	14.45	2.93	14.72	2.96	15.00	2.99	15.56	3.05	16.13	3.11
							14	13.13	2.89	13.67	2.95	14.21	3.01	14.49	3.04	14.77	3.07	15.33	3.13	15.90	3.19
							16	12.90	2.97	13.44	3.03	13.98	3.09	14.26	3.12	14.53	3.15	15.10	3.21	15.67	3.27
							18	12.66	3.05	13.20	3.11	13.75	3.17	14.03	3.20	14.30	3.23	14.87	3.29	15.44	3.35
							20	12.43	3.12	12.97	3.18	13.52	3.25	13.79	3.28	14.07	3.31	14.64	3.37	15.21	3.43
							21	12.31	3.16	12.85	3.22	13.40	3.29	13.68	3.32	13.96	3.35	14.52	3.41	15.09	3.47
							23	12.08	3.25	12.62	3.31	13.17	3.37	13.45	3.40	13.73	3.43	14.29	3.49	14.87	3.55
							25	11.85	3.33	12.39	3.39	12.94	3.45	13.22	3.48	13.50	3.51	14.06	3.57	14.64	3.63
							27	11.62	3.41	12.16	3.47	12.71	3.54	12.99	3.57	13.27	3.60	13.84	3.66	14.41	3.72
							29	11.39	3.50	11.93	3.56	12.48	3.62	12.76	3.65	13.04	3.68	13.61	3.75	14.19	3.81
							31	11.15	3.58	11.70	3.65	12.25	3.71	12.53	3.74	12.81	3.77	13.38	3.83	13.96	3.90
							33	10.92	3.67	11.47	3.73	12.02	3.80	12.30	3.83	12.59	3.86	13.16	3.92	13.74	3.99
							35	10.70	3.76	11.24	3.82	11.80	3.89	12.10	3.91	12.36	3.95	12.93	4.01	13.51	4.08
							37	10.47	3.85	11.01	3.91	11.57	3.98	11.85	4.01	12.14	4.04	12.71	4.11	13.29	4.17
							39	10.24	3.94	10.79	4.01	11.34	4.07	11.63	4.10	11.91	4.13	12.48	4.20	13.06	4.26
							42	9.90	4.08	10.45	4.15	11.01	4.21	11.29	4.24	11.57	4.28	12.15	4.34	12.73	4.41
							44	9.67	4.18	10.22	4.24	10.78	4.31	11.06	4.34	11.35	4.37	11.93	4.44	12.51	4.50
							46	9.44	4.27	10.00	4.34	10.56	4.41	10.84	4.44	11.13	4.47	11.70	4.54	12.29	4.60
2000	2000	2000	2000		8000	57%	10	7.26	1.83	10.23	1.87	10.43	1.92	10.55	1.94	10.67	1.96	10.97	2.00	11.32	2.04
							12	7.26	1.87	9.96	1.92	10.16	1.96	10.29	1.98	10.42	2.01	10.74	2.05	11.10	2.09
							14	7.26	1.92	9.69	1.97	9.91	2.01	10.04	2.03	10.19	2.05	10.51	2.09	10.89	2.13
							16	7.26	1.97	9.43	2.01	9.67	2.06	9.81	2.08	9.96	2.10	10.30	2.14	10.69	2.18
							18	7.26	2.02	9.19	2.06	9.44	2.11	9.58	2.13	9.74	2.15	10.10	2.19	10.51	2.23
							20	7.26	2.07	8.96	2.12	9.22	2.16	9.37	2.18	9.54	2.20	9.91	2.24	10.33	2.28
							21	7.26	2.10	8.84	2.14	9.12	2.18	9.27	2.21	9.44	2.23	9.82	2.27	10.25	2.31
							23	7.26	2.15	8.63	2.19	8.91	2.24	9.08	2.26	9.25	2.28	9.64	2.32	10.09	2.36
							25	7.26	2.20	8.42	2.25	8.72	2.29	8.89	2.31	9.08	2.33	9.48	2.37	9.94	2.41
							27	7.26	2.26	8.23	2.31	8.55	2.35	8.72	2.37	8.91	2.39	9.33	2.43	9.80	2.47
							29	7.26	2.32	8.05	2.36	8.38	2.41	8.56	2.43	8.76	2.45	9.19	2.49	9.68	2.53
							31	7.26	2.38	7.88	2.42	8.22	2.46	8.41	2.49	8.62	2.51	9.06	2.55	9.56	2.58
							33	7.26	2.44	7.72	2.48	8.08	2.52	8.28	2.55	8.49	2.57	8.95	2.60	9.46	2.64
							35	7.26	2.50	7.57	2.54	7.94	2.59	8.21	2.60	8.37	2.63	8.84	2.67	9.37	2.70
							37	7.26	2.56	7.44	2.61	7.82	2.65	8.04	2.67	8.26	2.69	8.75	2.73	9.29	2.77
							39	7.26	2.63	7.31	2.67	7.71	2.71	7.93	2.73	8.16	2.75	8.67	2.79	9.22	2.83
							42	7.26	2.73	7.15	2.77	7.57	2.81	7.80	2.83	8.04	2.85	8.57	2.89	9.14	2.93
							44	7.26	2.79	7.05	2.84	7.49	2.88	7.72	2.90	7.97	2.92	8.51	2.96	9.11	2.99
							46	7.26	2.86	6.97	2.91	7.42	2.95	7.66	2.97	7.92	2.99	8.47	3.03	9.08	3.06

12. Capacity Table

12-7. AJ140TXJ5KH/EA

COOLING

Combination (Capacity Index)					Combination (Total)	Combination (%)	Outdoor Temperature (°C,DB)	Indoor Temperature(°C, WB)													
								14		16		18		19		20		22		24	
								TC(kW)	PI(kW)	TC(kW)	PI(kW)	TC(kW)	PI(kW)	TC(kW)	PI(kW)	TC(kW)	PI(kW)	TC(kW)	PI(kW)	TC(kW)	PI(kW)
2000	2000	2000	2500		8500	61%	10	7.77	1.94	10.96	1.99	11.17	2.04	11.29	2.06	11.43	2.08	11.75	2.13	12.12	2.17
							12	7.77	1.99	10.66	2.04	10.88	2.08	11.01	2.11	11.16	2.13	11.50	2.17	11.89	2.22
							14	7.77	2.04	10.37	2.09	10.61	2.13	10.75	2.16	10.91	2.18	11.26	2.22	11.66	2.26
							16	7.77	2.09	10.10	2.14	10.35	2.18	10.50	2.21	10.66	2.23	11.03	2.27	11.45	2.32
							18	7.77	2.14	9.84	2.19	10.11	2.24	10.26	2.26	10.43	2.28	10.81	2.33	11.25	2.37
							20	7.77	2.20	9.59	2.25	9.87	2.29	10.04	2.31	10.21	2.34	10.61	2.38	11.06	2.42
							21	7.77	2.22	9.47	2.27	9.76	2.32	9.93	2.34	10.11	2.36	10.51	2.41	10.97	2.45
							23	7.77	2.28	9.24	2.33	9.54	2.38	9.72	2.40	9.91	2.42	10.32	2.46	10.80	2.50
							25	7.77	2.34	9.02	2.39	9.34	2.43	9.52	2.46	9.72	2.48	10.15	2.52	10.64	2.56
							27	7.77	2.40	8.81	2.45	9.15	2.49	9.34	2.52	9.54	2.54	9.99	2.58	10.49	2.62
							29	7.77	2.46	8.62	2.51	8.97	2.55	9.17	2.58	9.38	2.60	9.84	2.64	10.36	2.68
							31	7.77	2.52	8.44	2.57	8.80	2.62	9.01	2.64	9.23	2.66	9.70	2.70	10.24	2.74
							33	7.77	2.59	8.27	2.63	8.65	2.68	8.86	2.70	9.09	2.72	9.58	2.77	10.13	2.81
							35	7.77	2.65	8.11	2.70	8.51	2.74	8.79	2.76	8.96	2.79	9.47	2.83	10.03	2.87
							37	7.77	2.72	7.96	2.77	8.38	2.81	8.60	2.83	8.84	2.85	9.37	2.90	9.95	2.94
							39	7.77	2.79	7.83	2.83	8.26	2.88	8.49	2.90	8.74	2.92	9.28	2.96	9.88	3.00
							42	7.77	2.89	7.65	2.94	8.10	2.98	8.35	3.01	8.61	3.03	9.17	3.07	9.79	3.11
							44	7.77	2.97	7.55	3.01	8.02	3.06	8.27	3.08	8.54	3.10	9.12	3.14	9.75	3.18
							46	7.77	3.04	7.46	3.09	7.94	3.13	8.20	3.15	8.48	3.17	9.07	3.21	9.72	3.25
2000	2000	2000	3500		9500	68%	10	8.55	2.21	12.05	2.26	12.28	2.32	12.42	2.34	12.57	2.37	12.92	2.42	13.34	2.47
							12	8.55	2.26	11.73	2.32	11.97	2.37	12.12	2.40	12.28	2.42	12.65	2.47	13.08	2.52
							14	8.55	2.32	11.41	2.37	11.67	2.43	11.83	2.45	12.00	2.48	12.38	2.53	12.83	2.58
							16	8.55	2.38	11.11	2.43	11.39	2.49	11.55	2.51	11.73	2.54	12.13	2.59	12.59	2.63
							18	8.55	2.44	10.82	2.49	11.12	2.55	11.29	2.57	11.48	2.60	11.89	2.65	12.37	2.69
							20	8.55	2.50	10.55	2.55	10.86	2.61	11.04	2.63	11.23	2.66	11.67	2.71	12.17	2.75
							21	8.55	2.53	10.42	2.59	10.74	2.64	10.92	2.66	11.12	2.69	11.56	2.74	12.07	2.79
							23	8.55	2.60	10.16	2.65	10.50	2.70	10.69	2.73	10.90	2.75	11.36	2.80	11.88	2.85
							25	8.55	2.66	9.92	2.72	10.28	2.77	10.48	2.79	10.69	2.82	11.17	2.87	11.71	2.91
							27	8.55	2.73	9.70	2.78	10.07	2.84	10.27	2.86	10.50	2.89	10.99	2.93	11.55	2.98
							29	8.55	2.80	9.48	2.85	9.87	2.91	10.08	2.93	10.32	2.96	10.83	3.00	11.40	3.05
							31	8.55	2.87	9.28	2.92	9.68	2.98	9.91	3.00	10.15	3.03	10.68	3.07	11.27	3.12
							33	8.55	2.94	9.09	3.00	9.51	3.05	9.75	3.07	10.00	3.10	10.54	3.15	11.14	3.19
							35	8.55	3.02	8.92	3.07	9.36	3.12	9.67	3.14	9.86	3.17	10.42	3.22	11.04	3.27
							37	8.55	3.09	8.76	3.15	9.21	3.20	9.46	3.22	9.73	3.25	10.31	3.30	10.95	3.34
							39	8.55	3.17	8.61	3.23	9.08	3.28	9.34	3.30	9.62	3.33	10.21	3.37	10.87	3.42
							42	8.55	3.29	8.42	3.34	8.91	3.40	9.19	3.42	9.47	3.44	10.09	3.49	10.77	3.54
							44	8.55	3.37	8.31	3.43	8.82	3.48	9.10	3.50	9.39	3.53	10.03	3.57	10.72	3.62
							46	8.55	3.46	8.21	3.51	8.74	3.56	9.02	3.58	9.33	3.61	9.98	3.66	10.69	3.70

12. Capacity Table

12-7. AJ140TXJ5KH/EA

COOLING

Combination (Capacity Index)					Combination (Total)	Combination (%)	Outdoor Temperature (°C,DB)	Indoor Temperature(°C, WB)													
								14		16		18		19		20		22		24	
								TC(kW)	PI(kW)	TC(kW)	PI(kW)	TC(kW)	PI(kW)	TC(kW)	PI(kW)	TC(kW)	PI(kW)	TC(kW)	PI(kW)	TC(kW)	PI(kW)
2000	2000	2000	5000		11000	79%	10	10.10	2.87	14.25	2.94	14.52	3.01	14.68	3.04	14.86	3.08	15.28	3.14	15.77	3.20
							12	10.10	2.94	13.86	3.01	14.15	3.08	14.32	3.11	14.51	3.15	14.95	3.21	15.46	3.28
							14	10.10	3.01	13.49	3.08	13.80	3.15	13.98	3.19	14.18	3.22	14.64	3.29	15.16	3.35
							16	10.10	3.09	13.13	3.16	13.46	3.23	13.65	3.26	13.86	3.30	14.34	3.36	14.89	3.42
							18	10.10	3.17	12.79	3.24	13.14	3.31	13.34	3.34	13.56	3.37	14.06	3.44	14.63	3.50
							20	10.10	3.25	12.47	3.32	12.84	3.39	13.05	3.42	13.28	3.45	13.79	3.52	14.38	3.58
							21	10.10	3.29	12.31	3.36	12.69	3.43	12.91	3.46	13.14	3.49	13.67	3.56	14.26	3.62
							23	10.10	3.37	12.01	3.44	12.41	3.51	12.64	3.55	12.88	3.58	13.43	3.64	14.04	3.70
							25	10.10	3.46	11.73	3.53	12.15	3.60	12.38	3.63	12.64	3.66	13.20	3.73	13.84	3.79
							27	10.10	3.55	11.46	3.62	11.90	3.69	12.14	3.72	12.41	3.75	12.99	3.81	13.65	3.87
							29	10.10	3.64	11.21	3.71	11.66	3.77	11.92	3.81	12.19	3.84	12.80	3.90	13.47	3.96
							31	10.10	3.73	10.97	3.80	11.45	3.87	11.71	3.90	12.00	3.93	12.62	3.99	13.32	4.05
							33	10.10	3.82	10.75	3.89	11.25	3.96	11.52	3.99	11.82	4.03	12.46	4.09	13.17	4.15
							35	10.10	3.92	10.54	3.99	11.06	4.06	11.43	4.08	11.65	4.12	12.31	4.18	13.05	4.24
							37	10.10	4.02	10.36	4.09	10.89	4.16	11.19	4.19	11.50	4.22	12.18	4.28	12.94	4.34
							39	10.10	4.12	10.18	4.19	10.74	4.26	11.04	4.29	11.37	4.32	12.07	4.38	12.84	4.44
							42	10.10	4.28	9.95	4.35	10.54	4.41	10.86	4.44	11.20	4.48	11.93	4.54	12.73	4.59
							44	10.10	4.38	9.82	4.45	10.42	4.52	10.75	4.55	11.10	4.58	11.85	4.64	12.68	4.70
							46	10.10	4.49	9.70	4.56	10.33	4.63	10.67	4.66	11.02	4.69	11.79	4.75	12.64	4.81
2000	2000	2000	6800		12800	91%	10	10.69	2.75	15.08	2.82	15.37	2.88	15.54	2.92	15.73	2.95	16.17	3.01	16.69	3.07
							12	10.69	2.82	14.67	2.89	14.98	2.95	15.16	2.98	15.36	3.02	15.82	3.08	16.36	3.14
							14	10.69	2.89	14.28	2.96	14.61	3.02	14.80	3.05	15.01	3.09	15.49	3.15	16.05	3.21
							16	10.69	2.96	13.90	3.03	14.25	3.10	14.45	3.13	14.68	3.16	15.18	3.22	15.76	3.28
							18	10.69	3.04	13.54	3.10	13.91	3.17	14.13	3.20	14.36	3.23	14.88	3.30	15.48	3.35
							20	10.69	3.11	13.20	3.18	13.59	3.25	13.81	3.28	14.06	3.31	14.60	3.37	15.22	3.43
							21	10.69	3.15	13.03	3.22	13.44	3.29	13.66	3.32	13.91	3.35	14.47	3.41	15.10	3.47
							23	10.69	3.23	12.72	3.30	13.14	3.37	13.38	3.40	13.64	3.43	14.21	3.49	14.87	3.55
							25	10.69	3.31	12.42	3.38	12.86	3.45	13.11	3.48	13.38	3.51	13.97	3.57	14.65	3.63
							27	10.69	3.40	12.13	3.47	12.59	3.53	12.85	3.56	13.13	3.59	13.75	3.65	14.45	3.71
							29	10.69	3.49	11.86	3.55	12.35	3.62	12.62	3.65	12.91	3.68	13.55	3.74	14.26	3.80
							31	10.69	3.57	11.61	3.64	12.12	3.71	12.40	3.74	12.70	3.77	13.36	3.83	14.10	3.89
							33	10.69	3.67	11.38	3.73	11.91	3.80	12.20	3.83	12.51	3.86	13.19	3.92	13.95	3.97
							35	10.69	3.76	11.16	3.82	11.71	3.89	12.10	3.91	12.33	3.95	13.03	4.01	13.81	4.07
							37	10.69	3.85	10.96	3.92	11.53	3.98	11.84	4.01	12.17	4.04	12.90	4.10	13.70	4.16
							39	10.69	3.95	10.78	4.02	11.37	4.08	11.69	4.11	12.03	4.14	12.78	4.20	13.60	4.26
							42	10.69	4.10	10.54	4.17	11.16	4.23	11.49	4.26	11.85	4.29	12.63	4.35	13.48	4.40
							44	10.69	4.20	10.39	4.27	11.03	4.33	11.38	4.36	11.75	4.39	12.55	4.45	13.42	4.50
							46	10.69	4.31	10.27	4.37	10.93	4.43	11.29	4.46	11.67	4.49	12.49	4.55	13.38	4.61

12. Capacity Table

12-7. AJ140TXJ5KH/EA

COOLING

Combination (Capacity Index)					Combination (Total)	Combination (%)	Outdoor Temperature (°C,DB)	Indoor Temperature(°C, WB)													
								14		16		18		19		20		22		24	
								TC(kW)	PI(kW)	TC(kW)	PI(kW)	TC(kW)	PI(kW)	TC(kW)	PI(kW)	TC(kW)	PI(kW)	TC(kW)	PI(kW)	TC(kW)	PI(kW)
2000	2000	2500	2500		9000	64%	10	8.29	2.09	11.69	2.15	11.91	2.20	12.05	2.22	12.20	2.25	12.54	2.29	12.94	2.34
							12	8.29	2.15	11.38	2.20	11.61	2.25	11.75	2.27	11.91	2.30	12.27	2.35	12.68	2.39
							14	8.29	2.20	11.07	2.25	11.32	2.30	11.47	2.33	11.64	2.35	12.01	2.40	12.44	2.45
							16	8.29	2.26	10.78	2.31	11.05	2.36	11.21	2.38	11.38	2.41	11.77	2.45	12.22	2.50
							18	8.29	2.31	10.50	2.37	10.78	2.42	10.95	2.44	11.13	2.46	11.54	2.51	12.00	2.56
							20	8.29	2.37	10.23	2.42	10.54	2.47	10.71	2.50	10.90	2.52	11.32	2.57	11.80	2.61
							21	8.29	2.40	10.10	2.45	10.42	2.50	10.59	2.53	10.79	2.55	11.22	2.60	11.71	2.64
							23	8.29	2.46	9.86	2.52	10.18	2.57	10.37	2.59	10.57	2.61	11.02	2.66	11.52	2.70
							25	8.29	2.53	9.62	2.58	9.97	2.63	10.16	2.65	10.37	2.68	10.83	2.72	11.36	2.77
							27	8.29	2.59	9.40	2.64	9.76	2.69	9.97	2.72	10.18	2.74	10.66	2.79	11.20	2.83
							29	8.29	2.66	9.20	2.71	9.57	2.76	9.78	2.78	10.01	2.80	10.50	2.85	11.06	2.89
							31	8.29	2.72	9.00	2.78	9.39	2.82	9.61	2.85	9.85	2.87	10.36	2.92	10.93	2.96
							33	8.29	2.79	8.82	2.84	9.23	2.89	9.46	2.92	9.70	2.94	10.22	2.99	10.81	3.03
							35	8.29	2.86	8.65	2.91	9.08	2.96	9.38	2.98	9.56	3.01	10.10	3.06	10.71	3.10
							37	8.29	2.94	8.50	2.99	8.94	3.04	9.18	3.06	9.44	3.08	10.00	3.13	10.62	3.17
							39	8.29	3.01	8.36	3.06	8.81	3.11	9.06	3.13	9.33	3.16	9.90	3.20	10.54	3.24
							42	8.29	3.12	8.17	3.17	8.65	3.22	8.91	3.25	9.19	3.27	9.79	3.31	10.45	3.36
							44	8.29	3.20	8.06	3.25	8.55	3.30	8.82	3.32	9.11	3.35	9.73	3.39	10.40	3.43
							46	8.29	3.28	7.96	3.33	8.47	3.38	8.75	3.40	9.05	3.42	9.68	3.47	10.37	3.51
2000	2000	2500	3500		10000	71%	10	9.07	2.32	12.79	2.38	13.03	2.43	13.18	2.46	13.34	2.49	13.71	2.54	14.15	2.59
							12	9.07	2.38	12.44	2.44	12.70	2.49	12.86	2.52	13.03	2.55	13.42	2.60	13.87	2.65
							14	9.07	2.44	12.11	2.49	12.39	2.55	12.55	2.58	12.73	2.61	13.14	2.66	13.61	2.71
							16	9.07	2.50	11.79	2.56	12.08	2.61	12.26	2.64	12.44	2.67	12.87	2.72	13.36	2.77
							18	9.07	2.56	11.48	2.62	11.80	2.68	11.98	2.70	12.18	2.73	12.62	2.78	13.13	2.83
							20	9.07	2.63	11.19	2.68	11.52	2.74	11.71	2.77	11.92	2.79	12.38	2.85	12.91	2.89
							21	9.07	2.66	11.05	2.72	11.39	2.77	11.59	2.80	11.80	2.83	12.27	2.88	12.80	2.93
							23	9.07	2.73	10.78	2.79	11.14	2.84	11.34	2.87	11.56	2.89	12.05	2.95	12.60	2.99
							25	9.07	2.80	10.53	2.85	10.90	2.91	11.11	2.94	11.34	2.96	11.85	3.01	12.42	3.06
							27	9.07	2.87	10.29	2.93	10.68	2.98	10.90	3.01	11.14	3.03	11.66	3.08	12.25	3.13
							29	9.07	2.94	10.06	3.00	10.47	3.05	10.70	3.08	10.95	3.11	11.49	3.16	12.09	3.21
							31	9.07	3.02	9.85	3.07	10.28	3.13	10.51	3.15	10.77	3.18	11.33	3.23	11.95	3.28
							33	9.07	3.09	9.65	3.15	10.09	3.20	10.34	3.23	10.61	3.26	11.18	3.31	11.82	3.35
							35	9.07	3.17	9.47	3.23	9.93	3.28	10.26	3.30	10.46	3.33	11.05	3.38	11.71	3.43
							37	9.07	3.25	9.30	3.31	9.78	3.36	10.04	3.39	10.32	3.41	10.94	3.46	11.61	3.51
							39	9.07	3.33	9.14	3.39	9.64	3.44	9.91	3.47	10.20	3.49	10.83	3.54	11.53	3.59
							42	9.07	3.46	8.93	3.52	9.46	3.57	9.75	3.59	10.05	3.62	10.71	3.67	11.43	3.72
							44	9.07	3.55	8.81	3.60	9.36	3.65	9.65	3.68	9.97	3.71	10.64	3.75	11.38	3.80
							46	9.07	3.63	8.71	3.69	9.27	3.74	9.57	3.77	9.90	3.79	10.59	3.84	11.34	3.89

12. Capacity Table

12-7. AJ140TXJ5KH/EA

COOLING

Combination (Capacity Index)					Combination (Total)	Combination (%)	Outdoor Temperature (°C,DB)	Indoor Temperature(°C, WB)													
								14		16		18		19		20		22		24	
								TC(kW)	PI(kW)	TC(kW)	PI(kW)	TC(kW)	PI(kW)	TC(kW)	PI(kW)	TC(kW)	PI(kW)	TC(kW)	PI(kW)	TC(kW)	PI(kW)
2000	2000	2500	5000		11500	82%	10	10.62	2.88	14.98	2.95	15.27	3.02	15.44	3.06	15.63	3.09	16.07	3.16	16.58	3.22
							12	10.62	2.95	14.58	3.03	14.88	3.10	15.06	3.13	15.26	3.16	15.72	3.23	16.25	3.29
							14	10.62	3.03	14.19	3.10	14.51	3.17	14.70	3.20	14.91	3.24	15.39	3.30	15.95	3.36
							16	10.62	3.10	13.81	3.18	14.16	3.25	14.36	3.28	14.58	3.31	15.08	3.38	15.66	3.44
							18	10.62	3.18	13.45	3.25	13.82	3.32	14.03	3.36	14.26	3.39	14.78	3.46	15.38	3.52
							20	10.62	3.26	13.11	3.34	13.50	3.40	13.72	3.44	13.96	3.47	14.51	3.54	15.12	3.60
							21	10.62	3.31	12.95	3.38	13.35	3.45	13.57	3.48	13.82	3.51	14.37	3.58	15.00	3.64
							23	10.62	3.39	12.63	3.46	13.05	3.53	13.29	3.56	13.55	3.60	14.12	3.66	14.77	3.72
							25	10.62	3.48	12.33	3.55	12.77	3.62	13.02	3.65	13.29	3.68	13.88	3.74	14.55	3.81
							27	10.62	3.56	12.05	3.64	12.51	3.70	12.77	3.74	13.05	3.77	13.66	3.83	14.35	3.89
							29	10.62	3.66	11.79	3.73	12.27	3.79	12.54	3.83	12.82	3.86	13.46	3.92	14.17	3.98
							31	10.62	3.75	11.54	3.82	12.04	3.89	12.32	3.92	12.62	3.95	13.27	4.01	14.00	4.07
							33	10.62	3.84	11.30	3.91	11.83	3.98	12.12	4.01	12.43	4.05	13.10	4.11	13.85	4.17
							35	10.62	3.94	11.09	4.01	11.63	4.08	12.02	4.10	12.25	4.14	12.95	4.20	13.72	4.26
							37	10.62	4.04	10.89	4.11	11.45	4.18	11.76	4.21	12.09	4.24	12.81	4.30	13.60	4.36
							39	10.62	4.14	10.71	4.21	11.29	4.28	11.61	4.31	11.95	4.34	12.69	4.40	13.51	4.46
							42	10.62	4.30	10.47	4.37	11.08	4.43	11.42	4.47	11.77	4.50	12.54	4.56	13.39	4.62
							44	10.62	4.41	10.33	4.47	10.96	4.54	11.31	4.57	11.67	4.60	12.46	4.66	13.33	4.72
							46	10.62	4.52	10.20	4.58	10.86	4.65	11.22	4.68	11.59	4.71	12.40	4.77	13.29	4.83
2000	2000	2500	6800		13300	95%	10	10.69	2.75	15.08	2.82	15.37	2.88	15.54	2.92	15.73	2.95	16.17	3.01	16.69	3.07
							12	10.69	2.82	14.67	2.89	14.98	2.95	15.16	2.98	15.36	3.02	15.82	3.08	16.36	3.14
							14	10.69	2.89	14.28	2.96	14.61	3.02	14.80	3.05	15.01	3.09	15.49	3.15	16.05	3.21
							16	10.69	2.96	13.90	3.03	14.25	3.10	14.45	3.13	14.68	3.16	15.18	3.22	15.76	3.28
							18	10.69	3.04	13.54	3.10	13.91	3.17	14.13	3.20	14.36	3.23	14.88	3.30	15.48	3.35
							20	10.69	3.11	13.20	3.18	13.59	3.25	13.81	3.28	14.06	3.31	14.60	3.37	15.22	3.43
							21	10.69	3.15	13.03	3.22	13.44	3.29	13.66	3.32	13.91	3.35	14.47	3.41	15.10	3.47
							23	10.69	3.23	12.72	3.30	13.14	3.37	13.38	3.40	13.64	3.43	14.21	3.49	14.87	3.55
							25	10.69	3.31	12.42	3.38	12.86	3.45	13.11	3.48	13.38	3.51	13.97	3.57	14.65	3.63
							27	10.69	3.40	12.13	3.47	12.59	3.53	12.85	3.56	13.13	3.59	13.75	3.65	14.45	3.71
							29	10.69	3.49	11.86	3.55	12.35	3.62	12.62	3.65	12.91	3.68	13.55	3.74	14.26	3.80
							31	10.69	3.57	11.61	3.64	12.12	3.71	12.40	3.74	12.70	3.77	13.36	3.83	14.10	3.89
							33	10.69	3.67	11.38	3.73	11.91	3.80	12.20	3.83	12.51	3.86	13.19	3.92	13.95	3.97
							35	10.69	3.76	11.16	3.82	11.71	3.89	12.10	3.91	12.33	3.95	13.03	4.01	13.81	4.07
							37	10.69	3.85	10.96	3.92	11.53	3.98	11.84	4.01	12.17	4.04	12.90	4.10	13.70	4.16
							39	10.69	3.95	10.78	4.02	11.37	4.08	11.69	4.11	12.03	4.14	12.78	4.20	13.60	4.26
							42	10.69	4.10	10.54	4.17	11.16	4.23	11.49	4.26	11.85	4.29	12.63	4.35	13.48	4.40
							44	10.69	4.20	10.39	4.27	11.03	4.33	11.38	4.36	11.75	4.39	12.55	4.45	13.42	4.50
							46	10.69	4.31	10.27	4.37	10.93	4.43	11.29	4.46	11.67	4.49	12.49	4.55	13.38	4.61

12. Capacity Table

12-7. AJ140TXJ5KH/EA

COOLING

Combination (Capacity Index)					Combination (Total)	Combination (%)	Outdoor Temperature (°C,DB)	Indoor Temperature(°C, WB)													
								14		16		18		19		20		22		24	
								TC(kW)	PI(kW)	TC(kW)	PI(kW)	TC(kW)	PI(kW)	TC(kW)	PI(kW)	TC(kW)	PI(kW)	TC(kW)	PI(kW)	TC(kW)	PI(kW)
2000	2000	3500	3500		11000	79%	10	9.84	2.85	13.89	2.92	14.15	2.99	14.31	3.03	14.48	3.06	14.89	3.13	15.37	3.19
							12	9.84	2.92	13.51	3.00	13.79	3.07	13.96	3.10	14.14	3.13	14.57	3.20	15.06	3.26
							14	9.84	3.00	13.15	3.07	13.45	3.14	13.63	3.17	13.82	3.21	14.26	3.27	14.78	3.33
							16	9.84	3.07	12.80	3.14	13.12	3.21	13.31	3.25	13.51	3.28	13.98	3.34	14.51	3.41
							18	9.84	3.15	12.47	3.22	12.81	3.29	13.01	3.32	13.22	3.36	13.70	3.42	14.25	3.48
							20	9.84	3.23	12.15	3.30	12.51	3.37	12.72	3.40	12.94	3.44	13.44	3.50	14.02	3.56
							21	9.84	3.27	12.00	3.34	12.37	3.41	12.58	3.44	12.81	3.48	13.32	3.54	13.90	3.60
							23	9.84	3.36	11.71	3.43	12.10	3.49	12.32	3.53	12.55	3.56	13.08	3.62	13.69	3.68
							25	9.84	3.44	11.43	3.51	11.84	3.58	12.07	3.61	12.32	3.65	12.87	3.71	13.49	3.77
							27	9.84	3.53	11.17	3.60	11.60	3.67	11.84	3.70	12.09	3.73	12.66	3.79	13.30	3.85
							29	9.84	3.62	10.92	3.69	11.37	3.76	11.62	3.79	11.88	3.82	12.47	3.88	13.13	3.94
							31	9.84	3.71	10.69	3.78	11.16	3.85	11.42	3.88	11.69	3.91	12.30	3.97	12.98	4.03
							33	9.84	3.81	10.48	3.88	10.96	3.94	11.23	3.97	11.52	4.01	12.14	4.07	12.84	4.13
							35	9.84	3.90	10.28	3.97	10.78	4.04	11.14	4.06	11.35	4.10	12.00	4.16	12.72	4.22
							37	9.84	4.00	10.09	4.07	10.62	4.14	10.90	4.17	11.21	4.20	11.87	4.26	12.61	4.32
							39	9.84	4.10	9.92	4.17	10.47	4.24	10.76	4.27	11.08	4.30	11.76	4.36	12.52	4.42
							42	9.84	4.26	9.70	4.32	10.27	4.39	10.58	4.42	10.91	4.45	11.62	4.51	12.41	4.57
							44	9.84	4.36	9.57	4.43	10.16	4.50	10.48	4.53	10.82	4.56	11.55	4.62	12.35	4.68
							46	9.84	4.47	9.45	4.54	10.06	4.60	10.39	4.64	10.74	4.67	11.49	4.73	12.32	4.78
2000	2000	3500	5000		12500	89%	10	10.69	2.75	15.08	2.82	15.37	2.88	15.54	2.92	15.73	2.95	16.17	3.01	16.69	3.07
							12	10.69	2.82	14.67	2.89	14.98	2.95	15.16	2.98	15.36	3.02	15.82	3.08	16.36	3.14
							14	10.69	2.89	14.28	2.96	14.61	3.02	14.80	3.05	15.01	3.09	15.49	3.15	16.05	3.21
							16	10.69	2.96	13.90	3.03	14.25	3.10	14.45	3.13	14.68	3.16	15.18	3.22	15.76	3.28
							18	10.69	3.04	13.54	3.10	13.91	3.17	14.13	3.20	14.36	3.23	14.88	3.30	15.48	3.35
							20	10.69	3.11	13.20	3.18	13.59	3.25	13.81	3.28	14.06	3.31	14.60	3.37	15.22	3.43
							21	10.69	3.15	13.03	3.22	13.44	3.29	13.66	3.32	13.91	3.35	14.47	3.41	15.10	3.47
							23	10.69	3.23	12.72	3.30	13.14	3.37	13.38	3.40	13.64	3.43	14.21	3.49	14.87	3.55
							25	10.69	3.31	12.42	3.38	12.86	3.45	13.11	3.48	13.38	3.51	13.97	3.57	14.65	3.63
							27	10.69	3.40	12.13	3.47	12.59	3.53	12.85	3.56	13.13	3.59	13.75	3.65	14.45	3.71
							29	10.69	3.49	11.86	3.55	12.35	3.62	12.62	3.65	12.91	3.68	13.55	3.74	14.26	3.80
							31	10.69	3.57	11.61	3.64	12.12	3.71	12.40	3.74	12.70	3.77	13.36	3.83	14.10	3.89
							33	10.69	3.67	11.38	3.73	11.91	3.80	12.20	3.83	12.51	3.86	13.19	3.92	13.95	3.97
							35	10.69	3.76	11.16	3.82	11.71	3.89	12.10	3.91	12.33	3.95	13.03	4.01	13.81	4.07
							37	10.69	3.85	10.96	3.92	11.53	3.98	11.84	4.01	12.17	4.04	12.90	4.10	13.70	4.16
							39	10.69	3.95	10.78	4.02	11.37	4.08	11.69	4.11	12.03	4.14	12.78	4.20	13.60	4.26
							42	10.69	4.10	10.54	4.17	11.16	4.23	11.49	4.26	11.85	4.29	12.63	4.35	13.48	4.40
							44	10.69	4.20	10.39	4.27	11.03	4.33	11.38	4.36	11.75	4.39	12.55	4.45	13.42	4.50
							46	10.69	4.31	10.27	4.37	10.93	4.43	11.29	4.46	11.67	4.49	12.49	4.55	13.38	4.61

12. Capacity Table

12-7. AJ140TXJ5KH/EA

COOLING

Combination (Capacity Index)					Combination (Total)	Combination (%)	Outdoor Temperature (°C,DB)	Indoor Temperature(°C, WB)													
								14		16		18		19		20		22		24	
								TC(kW)	PI(kW)	TC(kW)	PI(kW)	TC(kW)	PI(kW)	TC(kW)	PI(kW)	TC(kW)	PI(kW)	TC(kW)	PI(kW)	TC(kW)	PI(kW)
2000	2000	3500	6800		14300	102%	10	13.61	2.74	14.14	2.80	14.68	2.86	14.96	2.89	15.23	2.92	15.79	2.98	16.36	3.04
							12	13.37	2.82	13.90	2.88	14.45	2.93	14.72	2.96	15.00	2.99	15.56	3.05	16.13	3.11
							14	13.13	2.89	13.67	2.95	14.21	3.01	14.49	3.04	14.77	3.07	15.33	3.13	15.90	3.19
							16	12.90	2.97	13.44	3.03	13.98	3.09	14.26	3.12	14.53	3.15	15.10	3.21	15.67	3.27
							18	12.66	3.05	13.20	3.11	13.75	3.17	14.03	3.20	14.30	3.23	14.87	3.29	15.44	3.35
							20	12.43	3.12	12.97	3.18	13.52	3.25	13.79	3.28	14.07	3.31	14.64	3.37	15.21	3.43
							21	12.31	3.16	12.85	3.22	13.40	3.29	13.68	3.32	13.96	3.35	14.52	3.41	15.09	3.47
							23	12.08	3.25	12.62	3.31	13.17	3.37	13.45	3.40	13.73	3.43	14.29	3.49	14.87	3.55
							25	11.85	3.33	12.39	3.39	12.94	3.45	13.22	3.48	13.50	3.51	14.06	3.57	14.64	3.63
							27	11.62	3.41	12.16	3.47	12.71	3.54	12.99	3.57	13.27	3.60	13.84	3.66	14.41	3.72
							29	11.39	3.50	11.93	3.56	12.48	3.62	12.76	3.65	13.04	3.68	13.61	3.75	14.19	3.81
							31	11.15	3.58	11.70	3.65	12.25	3.71	12.53	3.74	12.81	3.77	13.38	3.83	13.96	3.90
							33	10.92	3.67	11.47	3.73	12.02	3.80	12.30	3.83	12.59	3.86	13.16	3.92	13.74	3.99
							35	10.70	3.76	11.24	3.82	11.80	3.89	12.10	3.91	12.36	3.95	12.93	4.01	13.51	4.08
							37	10.47	3.85	11.01	3.91	11.57	3.98	11.85	4.01	12.14	4.04	12.71	4.11	13.29	4.17
							39	10.24	3.94	10.79	4.01	11.34	4.07	11.63	4.10	11.91	4.13	12.48	4.20	13.06	4.26
							42	9.90	4.08	10.45	4.15	11.01	4.21	11.29	4.24	11.57	4.28	12.15	4.34	12.73	4.41
							44	9.67	4.18	10.22	4.24	10.78	4.31	11.06	4.34	11.35	4.37	11.93	4.44	12.51	4.50
							46	9.44	4.27	10.00	4.34	10.56	4.41	10.84	4.44	11.13	4.47	11.70	4.54	12.29	4.60
2000	2000	5000	5000		14000	100%	10	13.61	2.74	14.14	2.80	14.68	2.86	14.96	2.89	15.23	2.92	15.79	2.98	16.36	3.04
							12	13.37	2.82	13.90	2.88	14.45	2.93	14.72	2.96	15.00	2.99	15.56	3.05	16.13	3.11
							14	13.13	2.89	13.67	2.95	14.21	3.01	14.49	3.04	14.77	3.07	15.33	3.13	15.90	3.19
							16	12.90	2.97	13.44	3.03	13.98	3.09	14.26	3.12	14.53	3.15	15.10	3.21	15.67	3.27
							18	12.66	3.05	13.20	3.11	13.75	3.17	14.03	3.20	14.30	3.23	14.87	3.29	15.44	3.35
							20	12.43	3.12	12.97	3.18	13.52	3.25	13.79	3.28	14.07	3.31	14.64	3.37	15.21	3.43
							21	12.31	3.16	12.85	3.22	13.40	3.29	13.68	3.32	13.96	3.35	14.52	3.41	15.09	3.47
							23	12.08	3.25	12.62	3.31	13.17	3.37	13.45	3.40	13.73	3.43	14.29	3.49	14.87	3.55
							25	11.85	3.33	12.39	3.39	12.94	3.45	13.22	3.48	13.50	3.51	14.06	3.57	14.64	3.63
							27	11.62	3.41	12.16	3.47	12.71	3.54	12.99	3.57	13.27	3.60	13.84	3.66	14.41	3.72
							29	11.39	3.50	11.93	3.56	12.48	3.62	12.76	3.65	13.04	3.68	13.61	3.75	14.19	3.81
							31	11.15	3.58	11.70	3.65	12.25	3.71	12.53	3.74	12.81	3.77	13.38	3.83	13.96	3.90
							33	10.92	3.67	11.47	3.73	12.02	3.80	12.30	3.83	12.59	3.86	13.16	3.92	13.74	3.99
							35	10.70	3.76	11.24	3.82	11.80	3.89	12.10	3.91	12.36	3.95	12.93	4.01	13.51	4.08
							37	10.47	3.85	11.01	3.91	11.57	3.98	11.85	4.01	12.14	4.04	12.71	4.11	13.29	4.17
							39	10.24	3.94	10.79	4.01	11.34	4.07	11.63	4.10	11.91	4.13	12.48	4.20	13.06	4.26
							42	9.90	4.08	10.45	4.15	11.01	4.21	11.29	4.24	11.57	4.28	12.15	4.34	12.73	4.41
							44	9.67	4.18	10.22	4.24	10.78	4.31	11.06	4.34	11.35	4.37	11.93	4.44	12.51	4.50
							46	9.44	4.27	10.00	4.34	10.56	4.41	10.84	4.44	11.13	4.47	11.70	4.54	12.29	4.60

12. Capacity Table

12-7. AJ140TXJ5KH/EA

COOLING

Combination (Capacity Index)					Combination (Total)	Combination (%)	Outdoor Temperature (°C,DB)	Indoor Temperature(°C, WB)													
								14		16		18		19		20		22		24	
								TC(kW)	PI(kW)	TC(kW)	PI(kW)	TC(kW)	PI(kW)	TC(kW)	PI(kW)	TC(kW)	PI(kW)	TC(kW)	PI(kW)	TC(kW)	PI(kW)
2000	2000	5000	6800		15800	113%	10	15.64	3.38	16.25	3.45	16.88	3.53	17.19	3.56	17.51	3.60	18.15	3.67	18.80	3.74
							12	15.37	3.47	15.98	3.54	16.61	3.62	16.92	3.65	17.24	3.69	17.89	3.76	18.54	3.84
							14	15.10	3.56	15.71	3.64	16.34	3.71	16.66	3.75	16.98	3.78	17.62	3.86	18.27	3.93
							16	14.83	3.66	15.45	3.73	16.07	3.81	16.39	3.84	16.71	3.88	17.35	3.95	18.01	4.03
							18	14.56	3.75	15.18	3.83	15.81	3.90	16.12	3.94	16.44	3.98	17.09	4.05	17.75	4.12
							20	14.29	3.85	14.91	3.93	15.54	4.00	15.86	4.04	16.18	4.08	16.83	4.15	17.48	4.22
							21	14.16	3.90	14.78	3.98	15.41	4.05	15.72	4.09	16.05	4.13	16.69	4.20	17.35	4.27
							23	13.89	4.00	14.51	4.08	15.14	4.15	15.46	4.19	15.78	4.23	16.43	4.30	17.09	4.38
							25	13.62	4.10	14.24	4.18	14.88	4.25	15.20	4.29	15.52	4.33	16.17	4.41	16.83	4.48
							27	13.35	4.21	13.98	4.28	14.61	4.36	14.93	4.40	15.25	4.43	15.91	4.51	16.57	4.59
							29	13.09	4.31	13.71	4.39	14.35	4.46	14.67	4.50	14.99	4.54	15.65	4.62	16.31	4.69
							31	12.82	4.42	13.45	4.49	14.09	4.57	14.41	4.61	14.73	4.65	15.39	4.73	16.05	4.80
							33	12.56	4.53	13.19	4.60	13.82	4.68	14.15	4.72	14.47	4.76	15.13	4.84	15.79	4.91
							35	12.29	4.64	12.92	4.71	13.56	4.79	13.91	4.82	14.21	4.87	14.87	4.95	15.53	5.03
							37	12.03	4.75	12.66	4.83	13.30	4.90	13.62	4.94	13.95	4.98	14.61	5.06	15.28	5.14
							39	11.77	4.86	12.40	4.94	13.04	5.02	13.37	5.06	13.69	5.10	14.35	5.18	15.02	5.26
							42	11.38	5.03	12.01	5.11	12.65	5.19	12.98	5.23	13.30	5.27	13.97	5.35	14.64	5.43
							44	11.12	5.15	11.75	5.23	12.39	5.31	12.72	5.35	13.05	5.39	13.71	5.47	14.38	5.55
							46	10.86	5.27	11.49	5.35	12.14	5.43	12.46	5.47	12.79	5.51	13.45	5.59	14.13	5.67
2000	2500	2500	2500		9500	68%	10	8.80	2.21	12.42	2.26	12.65	2.32	12.79	2.34	12.95	2.37	13.31	2.42	13.74	2.47
							12	8.80	2.26	12.08	2.32	12.33	2.37	12.48	2.40	12.65	2.42	13.03	2.47	13.47	2.52
							14	8.80	2.32	11.75	2.37	12.02	2.43	12.18	2.45	12.36	2.48	12.75	2.53	13.21	2.58
							16	8.80	2.38	11.44	2.43	11.73	2.49	11.90	2.51	12.08	2.54	12.49	2.59	12.97	2.63
							18	8.80	2.44	11.15	2.49	11.45	2.55	11.63	2.57	11.82	2.60	12.25	2.65	12.74	2.69
							20	8.80	2.50	10.87	2.55	11.19	2.61	11.37	2.63	11.57	2.66	12.02	2.71	12.53	2.75
							21	8.80	2.53	10.73	2.59	11.06	2.64	11.25	2.66	11.45	2.69	11.91	2.74	12.43	2.79
							23	8.80	2.60	10.47	2.65	10.81	2.70	11.01	2.73	11.22	2.75	11.70	2.80	12.24	2.85
							25	8.80	2.66	10.22	2.72	10.58	2.77	10.79	2.79	11.01	2.82	11.50	2.87	12.06	2.91
							27	8.80	2.73	9.99	2.78	10.37	2.84	10.58	2.86	10.81	2.89	11.32	2.93	11.89	2.98
							29	8.80	2.80	9.77	2.85	10.16	2.91	10.39	2.93	10.63	2.96	11.15	3.00	11.74	3.05
							31	8.80	2.87	9.56	2.92	9.97	2.98	10.21	3.00	10.45	3.03	11.00	3.07	11.60	3.12
							33	8.80	2.94	9.37	3.00	9.80	3.05	10.04	3.07	10.30	3.10	10.86	3.15	11.48	3.19
							35	8.80	3.02	9.19	3.07	9.64	3.12	9.96	3.14	10.15	3.17	10.73	3.22	11.37	3.27
							37	8.80	3.09	9.02	3.15	9.49	3.20	9.75	3.22	10.02	3.25	10.62	3.30	11.27	3.34
							39	8.80	3.17	8.87	3.23	9.36	3.28	9.62	3.30	9.90	3.33	10.52	3.37	11.19	3.42
							42	8.80	3.29	8.67	3.34	9.18	3.40	9.46	3.42	9.76	3.44	10.39	3.49	11.09	3.54
							44	8.80	3.37	8.56	3.43	9.08	3.48	9.37	3.50	9.67	3.53	10.33	3.57	11.05	3.62
							46	8.80	3.46	8.45	3.51	9.00	3.56	9.29	3.58	9.61	3.61	10.28	3.66	11.01	3.70

12. Capacity Table

12-7. AJ140TXJ5KH/EA

COOLING

Combination (Capacity Index)					Combination (Total)	Combination (%)	Outdoor Temperature (°C,DB)	Indoor Temperature(°C, WB)													
								14		16		18		19		20		22		24	
								TC(kW)	PI(kW)	TC(kW)	PI(kW)	TC(kW)	PI(kW)	TC(kW)	PI(kW)	TC(kW)	PI(kW)	TC(kW)	PI(kW)	TC(kW)	PI(kW)
2000	2500	2500	3500		10500	75%	10	9.58	2.83	13.51	2.90	13.77	2.97	13.92	3.01	14.09	3.04	14.49	3.10	14.95	3.17
							12	9.58	2.90	13.15	2.97	13.42	3.04	13.58	3.08	13.76	3.11	14.18	3.17	14.66	3.24
							14	9.58	2.98	12.79	3.05	13.09	3.12	13.26	3.15	13.45	3.18	13.88	3.25	14.38	3.31
							16	9.58	3.05	12.46	3.12	12.77	3.19	12.95	3.22	13.15	3.26	13.60	3.32	14.12	3.38
							18	9.58	3.13	12.13	3.20	12.46	3.27	12.65	3.30	12.86	3.33	13.33	3.40	13.87	3.46
							20	9.58	3.21	11.83	3.28	12.17	3.35	12.38	3.38	12.59	3.41	13.08	3.47	13.64	3.54
							21	9.58	3.25	11.68	3.32	12.04	3.39	12.24	3.42	12.46	3.45	12.96	3.51	13.53	3.58
							23	9.58	3.33	11.39	3.40	11.77	3.47	11.98	3.50	12.22	3.53	12.73	3.60	13.32	3.66
							25	9.58	3.42	11.12	3.49	11.52	3.55	11.74	3.59	11.98	3.62	12.52	3.68	13.12	3.74
							27	9.58	3.50	10.87	3.57	11.28	3.64	11.52	3.67	11.77	3.70	12.32	3.77	12.94	3.83
							29	9.58	3.59	10.63	3.66	11.06	3.73	11.30	3.76	11.56	3.79	12.14	3.85	12.78	3.91
							31	9.58	3.68	10.40	3.75	10.86	3.82	11.11	3.85	11.38	3.88	11.97	3.95	12.63	4.00
							33	9.58	3.78	10.19	3.85	10.67	3.91	10.93	3.94	11.21	3.98	11.81	4.04	12.49	4.10
							35	9.58	3.87	10.00	3.94	10.49	4.01	10.84	4.03	11.05	4.07	11.68	4.13	12.37	4.19
							37	9.58	3.97	9.82	4.04	10.33	4.11	10.61	4.14	10.91	4.17	11.55	4.23	12.27	4.29
							39	9.58	4.07	9.66	4.14	10.18	4.20	10.47	4.24	10.78	4.27	11.45	4.33	12.18	4.39
							42	9.58	4.23	9.44	4.29	9.99	4.36	10.30	4.39	10.62	4.42	11.31	4.48	12.07	4.54
							44	9.58	4.33	9.31	4.40	9.89	4.46	10.20	4.49	10.53	4.52	11.24	4.58	12.02	4.64
							46	9.58	4.44	9.20	4.51	9.79	4.57	10.11	4.60	10.45	4.63	11.19	4.69	11.99	4.75
2000	2500	2500	5000		12000	86%	10	10.69	2.75	15.08	2.82	15.37	2.88	15.54	2.92	15.73	2.95	16.17	3.01	16.69	3.07
							12	10.69	2.82	14.67	2.89	14.98	2.95	15.16	2.98	15.36	3.02	15.82	3.08	16.36	3.14
							14	10.69	2.89	14.28	2.96	14.61	3.02	14.80	3.05	15.01	3.09	15.49	3.15	16.05	3.21
							16	10.69	2.96	13.90	3.03	14.25	3.10	14.45	3.13	14.68	3.16	15.18	3.22	15.76	3.28
							18	10.69	3.04	13.54	3.10	13.91	3.17	14.13	3.20	14.36	3.23	14.88	3.30	15.48	3.35
							20	10.69	3.11	13.20	3.18	13.59	3.25	13.81	3.28	14.06	3.31	14.60	3.37	15.22	3.43
							21	10.69	3.15	13.03	3.22	13.44	3.29	13.66	3.32	13.91	3.35	14.47	3.41	15.10	3.47
							23	10.69	3.23	12.72	3.30	13.14	3.37	13.38	3.40	13.64	3.43	14.21	3.49	14.87	3.55
							25	10.69	3.31	12.42	3.38	12.86	3.45	13.11	3.48	13.38	3.51	13.97	3.57	14.65	3.63
							27	10.69	3.40	12.13	3.47	12.59	3.53	12.85	3.56	13.13	3.59	13.75	3.65	14.45	3.71
							29	10.69	3.49	11.86	3.55	12.35	3.62	12.62	3.65	12.91	3.68	13.55	3.74	14.26	3.80
							31	10.69	3.57	11.61	3.64	12.12	3.71	12.40	3.74	12.70	3.77	13.36	3.83	14.10	3.89
							33	10.69	3.67	11.38	3.73	11.91	3.80	12.20	3.83	12.51	3.86	13.19	3.92	13.95	3.97
							35	10.69	3.76	11.16	3.82	11.71	3.89	12.10	3.91	12.33	3.95	13.03	4.01	13.81	4.07
							37	10.69	3.85	10.96	3.92	11.53	3.98	11.84	4.01	12.17	4.04	12.90	4.10	13.70	4.16
							39	10.69	3.95	10.78	4.02	11.37	4.08	11.69	4.11	12.03	4.14	12.78	4.20	13.60	4.26
							42	10.69	4.10	10.54	4.17	11.16	4.23	11.49	4.26	11.85	4.29	12.63	4.35	13.48	4.40
							44	10.69	4.20	10.39	4.27	11.03	4.33	11.38	4.36	11.75	4.39	12.55	4.45	13.42	4.50
							46	10.69	4.31	10.27	4.37	10.93	4.43	11.29	4.46	11.67	4.49	12.49	4.55	13.38	4.61

12. Capacity Table

12-7. AJ140TXJ5KH/EA

COOLING

Combination (Capacity Index)					Combination (Total)	Combination (%)	Outdoor Temperature (°C,DB)	Indoor Temperature(°C, WB)													
								14		16		18		19		20		22		24	
								TC(kW)	PI(kW)	TC(kW)	PI(kW)	TC(kW)	PI(kW)	TC(kW)	PI(kW)	TC(kW)	PI(kW)	TC(kW)	PI(kW)	TC(kW)	PI(kW)
2000	2500	2500	6800		13800	99%	10	13.61	2.74	14.14	2.80	14.68	2.86	14.96	2.89	15.23	2.92	15.79	2.98	16.36	3.04
							12	13.37	2.82	13.90	2.88	14.45	2.93	14.72	2.96	15.00	2.99	15.56	3.05	16.13	3.11
							14	13.13	2.89	13.67	2.95	14.21	3.01	14.49	3.04	14.77	3.07	15.33	3.13	15.90	3.19
							16	12.90	2.97	13.44	3.03	13.98	3.09	14.26	3.12	14.53	3.15	15.10	3.21	15.67	3.27
							18	12.66	3.05	13.20	3.11	13.75	3.17	14.03	3.20	14.30	3.23	14.87	3.29	15.44	3.35
							20	12.43	3.12	12.97	3.18	13.52	3.25	13.79	3.28	14.07	3.31	14.64	3.37	15.21	3.43
							21	12.31	3.16	12.85	3.22	13.40	3.29	13.68	3.32	13.96	3.35	14.52	3.41	15.09	3.47
							23	12.08	3.25	12.62	3.31	13.17	3.37	13.45	3.40	13.73	3.43	14.29	3.49	14.87	3.55
							25	11.85	3.33	12.39	3.39	12.94	3.45	13.22	3.48	13.50	3.51	14.06	3.57	14.64	3.63
							27	11.62	3.41	12.16	3.47	12.71	3.54	12.99	3.57	13.27	3.60	13.84	3.66	14.41	3.72
							29	11.39	3.50	11.93	3.56	12.48	3.62	12.76	3.65	13.04	3.68	13.61	3.75	14.19	3.81
							31	11.15	3.58	11.70	3.65	12.25	3.71	12.53	3.74	12.81	3.77	13.38	3.83	13.96	3.90
							33	10.92	3.67	11.47	3.73	12.02	3.80	12.30	3.83	12.59	3.86	13.16	3.92	13.74	3.99
							35	10.70	3.76	11.24	3.82	11.80	3.89	12.10	3.91	12.36	3.95	12.93	4.01	13.51	4.08
							37	10.47	3.85	11.01	3.91	11.57	3.98	11.85	4.01	12.14	4.04	12.71	4.11	13.29	4.17
							39	10.24	3.94	10.79	4.01	11.34	4.07	11.63	4.10	11.91	4.13	12.48	4.20	13.06	4.26
							42	9.90	4.08	10.45	4.15	11.01	4.21	11.29	4.24	11.57	4.28	12.15	4.34	12.73	4.41
							44	9.67	4.18	10.22	4.24	10.78	4.31	11.06	4.34	11.35	4.37	11.93	4.44	12.51	4.50
							46	9.44	4.27	10.00	4.34	10.56	4.41	10.84	4.44	11.13	4.47	11.70	4.54	12.29	4.60
2000	2500	3500	3500		11500	82%	10	10.36	2.87	14.61	2.94	14.89	3.01	15.05	3.04	15.24	3.08	15.66	3.14	16.17	3.20
							12	10.36	2.94	14.21	3.01	14.51	3.08	14.69	3.11	14.88	3.15	15.33	3.21	15.85	3.28
							14	10.36	3.01	13.83	3.08	14.15	3.15	14.34	3.19	14.54	3.22	15.01	3.29	15.55	3.35
							16	10.36	3.09	13.47	3.16	13.80	3.23	14.00	3.26	14.22	3.30	14.70	3.36	15.26	3.42
							18	10.36	3.17	13.12	3.24	13.48	3.31	13.68	3.34	13.91	3.37	14.41	3.44	15.00	3.50
							20	10.36	3.25	12.79	3.32	13.16	3.39	13.38	3.42	13.62	3.45	14.14	3.52	14.75	3.58
							21	10.36	3.29	12.63	3.36	13.01	3.43	13.24	3.46	13.48	3.49	14.01	3.56	14.63	3.62
							23	10.36	3.37	12.32	3.44	12.73	3.51	12.96	3.55	13.21	3.58	13.77	3.64	14.40	3.70
							25	10.36	3.46	12.03	3.53	12.45	3.60	12.70	3.63	12.96	3.66	13.54	3.73	14.19	3.79
							27	10.36	3.55	11.75	3.62	12.20	3.69	12.45	3.72	12.72	3.75	13.32	3.81	13.99	3.87
							29	10.36	3.64	11.49	3.71	11.96	3.77	12.22	3.81	12.50	3.84	13.12	3.90	13.82	3.96
							31	10.36	3.73	11.25	3.80	11.74	3.87	12.01	3.90	12.30	3.93	12.94	3.99	13.65	4.05
							33	10.36	3.82	11.02	3.89	11.53	3.96	11.81	3.99	12.12	4.03	12.77	4.09	13.51	4.15
							35	10.36	3.92	10.81	3.99	11.34	4.06	11.72	4.08	11.95	4.12	12.62	4.18	13.38	4.24
							37	10.36	4.02	10.62	4.09	11.17	4.16	11.47	4.19	11.79	4.22	12.49	4.28	13.27	4.34
							39	10.36	4.12	10.44	4.19	11.01	4.26	11.32	4.29	11.65	4.32	12.37	4.38	13.17	4.44
							42	10.36	4.28	10.20	4.35	10.80	4.41	11.13	4.44	11.48	4.48	12.23	4.54	13.05	4.59
							44	10.36	4.38	10.07	4.45	10.69	4.52	11.03	4.55	11.38	4.58	12.15	4.64	13.00	4.70
							46	10.36	4.49	9.95	4.56	10.59	4.63	10.94	4.66	11.30	4.69	12.09	4.75	12.96	4.81

12. Capacity Table

12-7. AJ140TXJ5KH/EA

COOLING

Combination (Capacity Index)					Combination (Total)	Combination (%)	Outdoor Temperature (°C,DB)	Indoor Temperature(°C, WB)													
								14		16		18		19		20		22		24	
								TC(kW)	PI(kW)	TC(kW)	PI(kW)	TC(kW)	PI(kW)	TC(kW)	PI(kW)	TC(kW)	PI(kW)	TC(kW)	PI(kW)	TC(kW)	PI(kW)
2000	2500	3500	5000		13000	93%	10	10.69	2.75	15.08	2.82	15.37	2.88	15.54	2.92	15.73	2.95	16.17	3.01	16.69	3.07
							12	10.69	2.82	14.67	2.89	14.98	2.95	15.16	2.98	15.36	3.02	15.82	3.08	16.36	3.14
							14	10.69	2.89	14.28	2.96	14.61	3.02	14.80	3.05	15.01	3.09	15.49	3.15	16.05	3.21
							16	10.69	2.96	13.90	3.03	14.25	3.10	14.45	3.13	14.68	3.16	15.18	3.22	15.76	3.28
							18	10.69	3.04	13.54	3.10	13.91	3.17	14.13	3.20	14.36	3.23	14.88	3.30	15.48	3.35
							20	10.69	3.11	13.20	3.18	13.59	3.25	13.81	3.28	14.06	3.31	14.60	3.37	15.22	3.43
							21	10.69	3.15	13.03	3.22	13.44	3.29	13.66	3.32	13.91	3.35	14.47	3.41	15.10	3.47
							23	10.69	3.23	12.72	3.30	13.14	3.37	13.38	3.40	13.64	3.43	14.21	3.49	14.87	3.55
							25	10.69	3.31	12.42	3.38	12.86	3.45	13.11	3.48	13.38	3.51	13.97	3.57	14.65	3.63
							27	10.69	3.40	12.13	3.47	12.59	3.53	12.85	3.56	13.13	3.59	13.75	3.65	14.45	3.71
							29	10.69	3.49	11.86	3.55	12.35	3.62	12.62	3.65	12.91	3.68	13.55	3.74	14.26	3.80
							31	10.69	3.57	11.61	3.64	12.12	3.71	12.40	3.74	12.70	3.77	13.36	3.83	14.10	3.89
							33	10.69	3.67	11.38	3.73	11.91	3.80	12.20	3.83	12.51	3.86	13.19	3.92	13.95	3.97
							35	10.69	3.76	11.16	3.82	11.71	3.89	12.10	3.91	12.33	3.95	13.03	4.01	13.81	4.07
							37	10.69	3.85	10.96	3.92	11.53	3.98	11.84	4.01	12.17	4.04	12.90	4.10	13.70	4.16
							39	10.69	3.95	10.78	4.02	11.37	4.08	11.69	4.11	12.03	4.14	12.78	4.20	13.60	4.26
							42	10.69	4.10	10.54	4.17	11.16	4.23	11.49	4.26	11.85	4.29	12.63	4.35	13.48	4.40
							44	10.69	4.20	10.39	4.27	11.03	4.33	11.38	4.36	11.75	4.39	12.55	4.45	13.42	4.50
							46	10.69	4.31	10.27	4.37	10.93	4.43	11.29	4.46	11.67	4.49	12.49	4.55	13.38	4.61
2000	2500	3500	6800		14800	106%	10	14.34	3.17	14.90	3.24	15.47	3.31	15.76	3.34	16.05	3.37	16.64	3.44	17.24	3.51
							12	14.09	3.26	14.65	3.32	15.22	3.39	15.51	3.43	15.80	3.46	16.39	3.53	16.99	3.60
							14	13.84	3.34	14.40	3.41	14.98	3.48	15.27	3.51	15.56	3.55	16.15	3.62	16.75	3.69
							16	13.59	3.43	14.16	3.50	14.73	3.57	15.02	3.60	15.32	3.64	15.91	3.71	16.51	3.78
							18	13.34	3.52	13.91	3.59	14.49	3.66	14.78	3.69	15.07	3.73	15.66	3.80	16.27	3.87
							20	13.10	3.61	13.67	3.68	14.24	3.75	14.53	3.79	14.83	3.82	15.42	3.89	16.02	3.96
							21	12.97	3.66	13.54	3.73	14.12	3.80	14.41	3.83	14.71	3.87	15.30	3.94	15.90	4.01
							23	12.73	3.75	13.30	3.82	13.88	3.89	14.17	3.93	14.47	3.96	15.06	4.03	15.66	4.10
							25	12.48	3.85	13.06	3.92	13.64	3.99	13.93	4.02	14.22	4.06	14.82	4.13	15.43	4.20
							27	12.24	3.94	12.81	4.02	13.39	4.09	13.69	4.12	13.98	4.16	14.58	4.23	15.19	4.30
							29	12.00	4.04	12.57	4.11	13.15	4.19	13.45	4.22	13.74	4.26	14.34	4.33	14.95	4.40
							31	11.75	4.14	12.33	4.21	12.91	4.29	13.21	4.32	13.50	4.36	14.10	4.43	14.71	4.50
							33	11.51	4.24	12.09	4.32	12.67	4.39	12.97	4.43	13.26	4.46	13.86	4.53	14.47	4.61
							35	11.27	4.35	11.85	4.42	12.43	4.49	12.75	4.52	13.02	4.57	13.63	4.64	14.24	4.71
							37	11.03	4.45	11.61	4.52	12.19	4.60	12.49	4.64	12.79	4.67	13.39	4.75	14.00	4.82
							39	10.79	4.56	11.37	4.63	11.95	4.71	12.25	4.74	12.55	4.78	13.15	4.85	13.77	4.93
							42	10.43	4.72	11.01	4.79	11.60	4.87	11.90	4.91	12.20	4.94	12.80	5.02	13.42	5.09
							44	10.19	4.83	10.77	4.91	11.36	4.98	11.66	5.02	11.96	5.06	12.57	5.13	13.18	5.21
							46	9.95	4.94	10.53	5.02	11.12	5.09	11.42	5.13	11.72	5.17	12.33	5.24	12.95	5.32

12. Capacity Table

12-7. AJ140TXJ5KH/EA

COOLING

Combination (Capacity Index)					Combination (Total)	Combination (%)	Outdoor Temperature (°C,DB)	Indoor Temperature(°C, WB)													
								14		16		18		19		20		22		24	
								TC(kW)	PI(kW)	TC(kW)	PI(kW)	TC(kW)	PI(kW)	TC(kW)	PI(kW)	TC(kW)	PI(kW)	TC(kW)	PI(kW)	TC(kW)	PI(kW)
2000	2500	5000	5000		14500	104%	10	14.57	3.21	15.14	3.27	15.73	3.34	16.02	3.38	16.32	3.41	16.91	3.48	17.52	3.55
							12	14.32	3.29	14.89	3.36	15.47	3.43	15.77	3.46	16.07	3.50	16.66	3.57	17.27	3.64
							14	14.07	3.38	14.64	3.45	15.22	3.52	15.52	3.55	15.82	3.59	16.42	3.66	17.03	3.73
							16	13.82	3.47	14.39	3.54	14.97	3.61	15.27	3.64	15.57	3.68	16.17	3.75	16.78	3.82
							18	13.56	3.56	14.14	3.63	14.73	3.70	15.02	3.73	15.32	3.77	15.92	3.84	16.53	3.91
							20	13.31	3.65	13.89	3.72	14.48	3.79	14.77	3.83	15.07	3.86	15.68	3.93	16.29	4.01
							21	13.19	3.70	13.77	3.77	14.35	3.84	14.65	3.88	14.95	3.91	15.55	3.98	16.17	4.05
							23	12.94	3.79	13.52	3.86	14.11	3.94	14.40	3.97	14.70	4.01	15.31	4.08	15.92	4.15
							25	12.69	3.89	13.27	3.96	13.86	4.03	14.16	4.07	14.46	4.10	15.06	4.18	15.68	4.25
							27	12.44	3.99	13.02	4.06	13.61	4.13	13.91	4.17	14.21	4.20	14.82	4.28	15.44	4.35
							29	12.19	4.09	12.78	4.16	13.37	4.23	13.67	4.27	13.97	4.30	14.58	4.38	15.19	4.45
							31	11.95	4.19	12.53	4.26	13.12	4.33	13.42	4.37	13.72	4.41	14.33	4.48	14.95	4.55
							33	11.70	4.29	12.29	4.36	12.88	4.44	13.18	4.47	13.48	4.51	14.09	4.58	14.71	4.66
							35	11.46	4.39	12.04	4.47	12.64	4.54	12.96	4.57	13.24	4.62	13.85	4.69	14.47	4.76
							37	11.21	4.50	11.80	4.57	12.39	4.65	12.69	4.69	13.00	4.72	13.61	4.80	14.23	4.87
							39	10.97	4.61	11.55	4.68	12.15	4.76	12.45	4.80	12.76	4.83	13.37	4.91	13.99	4.98
							42	10.60	4.77	11.19	4.85	11.79	4.92	12.09	4.96	12.40	5.00	13.01	5.07	13.64	5.15
							44	10.36	4.88	10.95	4.96	11.55	5.04	11.85	5.07	12.16	5.11	12.77	5.19	13.40	5.26
							46	10.12	5.00	10.71	5.07	11.31	5.15	11.61	5.19	11.92	5.23	12.54	5.30	13.16	5.38
2000	2500	5000	6800		16300	116%	10	15.74	3.40	16.36	3.47	16.99	3.54	17.30	3.58	17.62	3.61	18.27	3.69	18.93	3.76
							12	15.47	3.49	16.09	3.56	16.72	3.63	17.03	3.67	17.35	3.71	18.00	3.78	18.66	3.85
							14	15.20	3.58	15.82	3.65	16.45	3.73	16.76	3.76	17.09	3.80	17.73	3.87	18.39	3.95
							16	14.92	3.67	15.55	3.75	16.18	3.82	16.50	3.86	16.82	3.90	17.47	3.97	18.13	4.04
							18	14.65	3.77	15.28	3.84	15.91	3.92	16.23	3.96	16.55	3.99	17.20	4.07	17.86	4.14
							20	14.38	3.87	15.01	3.94	15.64	4.02	15.96	4.05	16.28	4.09	16.93	4.17	17.60	4.24
							21	14.25	3.92	14.87	3.99	15.51	4.07	15.83	4.10	16.15	4.14	16.80	4.22	17.46	4.29
							23	13.98	4.02	14.60	4.09	15.24	4.17	15.56	4.21	15.88	4.24	16.54	4.32	17.20	4.40
							25	13.71	4.12	14.34	4.20	14.97	4.27	15.29	4.31	15.62	4.35	16.27	4.42	16.94	4.50
							27	13.44	4.22	14.07	4.30	14.71	4.38	15.03	4.41	15.35	4.45	16.01	4.53	16.68	4.61
							29	13.17	4.33	13.80	4.41	14.44	4.48	14.76	4.52	15.09	4.56	15.75	4.64	16.41	4.71
							31	12.91	4.44	13.54	4.51	14.18	4.59	14.50	4.63	14.83	4.67	15.48	4.75	16.15	4.82
							33	12.64	4.54	13.27	4.62	13.91	4.70	14.24	4.74	14.56	4.78	15.22	4.86	15.89	4.93
							35	12.37	4.65	13.01	4.73	13.65	4.81	14.00	4.84	14.30	4.89	14.96	4.97	15.63	5.05
							37	12.11	4.77	12.74	4.85	13.39	4.92	13.71	4.96	14.04	5.00	14.70	5.08	15.37	5.16
							39	11.85	4.88	12.48	4.96	13.13	5.04	13.45	5.08	13.78	5.12	14.44	5.20	15.12	5.28
							42	11.45	5.05	12.09	5.13	12.73	5.21	13.06	5.25	13.39	5.29	14.06	5.37	14.73	5.45
							44	11.19	5.17	11.83	5.25	12.47	5.33	12.80	5.37	13.13	5.41	13.80	5.49	14.47	5.58
							46	10.93	5.29	11.57	5.37	12.22	5.45	12.54	5.49	12.87	5.53	13.54	5.62	14.22	5.70

12. Capacity Table

12-7. AJ140TXJ5KH/EA

COOLING

Combination (Capacity Index)					Combination (Total)	Combination (%)	Outdoor Temperature (°C,DB)	Indoor Temperature(°C, WB)													
								14		16		18		19		20		22		24	
								TC(kW)	PI(kW)	TC(kW)	PI(kW)	TC(kW)	PI(kW)	TC(kW)	PI(kW)	TC(kW)	PI(kW)	TC(kW)	PI(kW)	TC(kW)	PI(kW)
2000	3500	3500	3500		12500	89%	10	10.69	2.75	15.08	2.82	15.37	2.88	15.54	2.92	15.73	2.95	16.17	3.01	16.69	3.07
							12	10.69	2.82	14.67	2.89	14.98	2.95	15.16	2.98	15.36	3.02	15.82	3.08	16.36	3.14
							14	10.69	2.89	14.28	2.96	14.61	3.02	14.80	3.05	15.01	3.09	15.49	3.15	16.05	3.21
							16	10.69	2.96	13.90	3.03	14.25	3.10	14.45	3.13	14.68	3.16	15.18	3.22	15.76	3.28
							18	10.69	3.04	13.54	3.10	13.91	3.17	14.13	3.20	14.36	3.23	14.88	3.30	15.48	3.35
							20	10.69	3.11	13.20	3.18	13.59	3.25	13.81	3.28	14.06	3.31	14.60	3.37	15.22	3.43
							21	10.69	3.15	13.03	3.22	13.44	3.29	13.66	3.32	13.91	3.35	14.47	3.41	15.10	3.47
							23	10.69	3.23	12.72	3.30	13.14	3.37	13.38	3.40	13.64	3.43	14.21	3.49	14.87	3.55
							25	10.69	3.31	12.42	3.38	12.86	3.45	13.11	3.48	13.38	3.51	13.97	3.57	14.65	3.63
							27	10.69	3.40	12.13	3.47	12.59	3.53	12.85	3.56	13.13	3.59	13.75	3.65	14.45	3.71
							29	10.69	3.49	11.86	3.55	12.35	3.62	12.62	3.65	12.91	3.68	13.55	3.74	14.26	3.80
							31	10.69	3.57	11.61	3.64	12.12	3.71	12.40	3.74	12.70	3.77	13.36	3.83	14.10	3.89
							33	10.69	3.67	11.38	3.73	11.91	3.80	12.20	3.83	12.51	3.86	13.19	3.92	13.95	3.97
							35	10.69	3.76	11.16	3.82	11.71	3.89	12.10	3.91	12.33	3.95	13.03	4.01	13.81	4.07
							37	10.69	3.85	10.96	3.92	11.53	3.98	11.84	4.01	12.17	4.04	12.90	4.10	13.70	4.16
							39	10.69	3.95	10.78	4.02	11.37	4.08	11.69	4.11	12.03	4.14	12.78	4.20	13.60	4.26
							42	10.69	4.10	10.54	4.17	11.16	4.23	11.49	4.26	11.85	4.29	12.63	4.35	13.48	4.40
							44	10.69	4.20	10.39	4.27	11.03	4.33	11.38	4.36	11.75	4.39	12.55	4.45	13.42	4.50
							46	10.69	4.31	10.27	4.37	10.93	4.43	11.29	4.46	11.67	4.49	12.49	4.55	13.38	4.61
2000	3500	3500	5000		14000	100%	10	13.61	2.74	14.14	2.80	14.68	2.86	14.96	2.89	15.23	2.92	15.79	2.98	16.36	3.04
							12	13.37	2.82	13.90	2.88	14.45	2.93	14.72	2.96	15.00	2.99	15.56	3.05	16.13	3.11
							14	13.13	2.89	13.67	2.95	14.21	3.01	14.49	3.04	14.77	3.07	15.33	3.13	15.90	3.19
							16	12.90	2.97	13.44	3.03	13.98	3.09	14.26	3.12	14.53	3.15	15.10	3.21	15.67	3.27
							18	12.66	3.05	13.20	3.11	13.75	3.17	14.03	3.20	14.30	3.23	14.87	3.29	15.44	3.35
							20	12.43	3.12	12.97	3.18	13.52	3.25	13.79	3.28	14.07	3.31	14.64	3.37	15.21	3.43
							21	12.31	3.16	12.85	3.22	13.40	3.29	13.68	3.32	13.96	3.35	14.52	3.41	15.09	3.47
							23	12.08	3.25	12.62	3.31	13.17	3.37	13.45	3.40	13.73	3.43	14.29	3.49	14.87	3.55
							25	11.85	3.33	12.39	3.39	12.94	3.45	13.22	3.48	13.50	3.51	14.06	3.57	14.64	3.63
							27	11.62	3.41	12.16	3.47	12.71	3.54	12.99	3.57	13.27	3.60	13.84	3.66	14.41	3.72
							29	11.39	3.50	11.93	3.56	12.48	3.62	12.76	3.65	13.04	3.68	13.61	3.75	14.19	3.81
							31	11.15	3.58	11.70	3.65	12.25	3.71	12.53	3.74	12.81	3.77	13.38	3.83	13.96	3.90
							33	10.92	3.67	11.47	3.73	12.02	3.80	12.30	3.83	12.59	3.86	13.16	3.92	13.74	3.99
							35	10.70	3.76	11.24	3.82	11.80	3.89	12.10	3.91	12.36	3.95	12.93	4.01	13.51	4.08
							37	10.47	3.85	11.01	3.91	11.57	3.98	11.85	4.01	12.14	4.04	12.71	4.11	13.29	4.17
							39	10.24	3.94	10.79	4.01	11.34	4.07	11.63	4.10	11.91	4.13	12.48	4.20	13.06	4.26
							42	9.90	4.08	10.45	4.15	11.01	4.21	11.29	4.24	11.57	4.28	12.15	4.34	12.73	4.41
							44	9.67	4.18	10.22	4.24	10.78	4.31	11.06	4.34	11.35	4.37	11.93	4.44	12.51	4.50
							46	9.44	4.27	10.00	4.34	10.56	4.41	10.84	4.44	11.13	4.47	11.70	4.54	12.29	4.60

12. Capacity Table

12-7. AJ140TXJ5KH/EA

COOLING

Combination (Capacity Index)					Combination (Total)	Combination (%)	Outdoor Temperature (°C,DB)	Indoor Temperature(°C, WB)													
								14		16		18		19		20		22		24	
								TC(kW)	PI(kW)	TC(kW)	PI(kW)	TC(kW)	PI(kW)	TC(kW)	PI(kW)	TC(kW)	PI(kW)	TC(kW)	PI(kW)	TC(kW)	PI(kW)
2000	3500	3500	6800		15800	113%	10	15.42	3.35	16.02	3.42	16.64	3.49	16.95	3.53	17.26	3.56	17.89	3.63	18.53	3.70
							12	15.15	3.44	15.75	3.51	16.37	3.58	16.68	3.62	17.00	3.65	17.63	3.72	18.27	3.80
							14	14.88	3.53	15.49	3.60	16.11	3.67	16.42	3.71	16.73	3.74	17.37	3.82	18.01	3.89
							16	14.61	3.62	15.22	3.69	15.84	3.77	16.15	3.80	16.47	3.84	17.11	3.91	17.75	3.98
							18	14.35	3.72	14.96	3.79	15.58	3.86	15.89	3.90	16.21	3.94	16.84	4.01	17.49	4.08
							20	14.08	3.81	14.70	3.89	15.32	3.96	15.63	4.00	15.95	4.03	16.58	4.11	17.23	4.18
							21	13.95	3.86	14.56	3.93	15.18	4.01	15.50	4.05	15.81	4.08	16.45	4.16	17.10	4.23
							23	13.69	3.96	14.30	4.03	14.92	4.11	15.24	4.15	15.55	4.18	16.19	4.26	16.84	4.33
							25	13.42	4.06	14.04	4.13	14.66	4.21	14.98	4.25	15.29	4.28	15.94	4.36	16.59	4.43
							27	13.16	4.16	13.78	4.24	14.40	4.31	14.72	4.35	15.04	4.39	15.68	4.46	16.33	4.54
							29	12.90	4.27	13.52	4.34	14.14	4.42	14.46	4.46	14.78	4.49	15.42	4.57	16.07	4.64
							31	12.64	4.37	13.26	4.45	13.88	4.52	14.20	4.56	14.52	4.60	15.16	4.68	15.82	4.75
							33	12.38	4.48	13.00	4.55	13.62	4.63	13.94	4.67	14.26	4.71	14.91	4.79	15.56	4.86
							35	12.12	4.59	12.74	4.66	13.37	4.74	13.71	4.77	14.01	4.82	14.65	4.90	15.31	4.97
							37	11.86	4.70	12.48	4.78	13.11	4.85	13.43	4.89	13.75	4.93	14.40	5.01	15.06	5.09
							39	11.60	4.81	12.22	4.89	12.85	4.97	13.17	5.01	13.49	5.04	14.14	5.12	14.80	5.20
							42	11.21	4.98	11.84	5.06	12.47	5.14	12.79	5.18	13.11	5.22	13.76	5.30	14.43	5.38
							44	10.96	5.10	11.58	5.18	12.22	5.26	12.54	5.30	12.86	5.34	13.51	5.41	14.17	5.49
							46	10.70	5.22	11.33	5.30	11.96	5.38	12.28	5.41	12.61	5.45	13.26	5.53	13.92	5.61
2000	3500	5000	5000		15500	111%	10	15.53	3.36	16.14	3.43	16.76	3.50	17.07	3.54	17.39	3.58	18.02	3.65	18.67	3.72
							12	15.26	3.45	15.87	3.52	16.49	3.60	16.80	3.63	17.12	3.67	17.76	3.74	18.41	3.81
							14	14.99	3.54	15.60	3.62	16.22	3.69	16.54	3.72	16.85	3.76	17.49	3.83	18.14	3.91
							16	14.72	3.64	15.33	3.71	15.96	3.78	16.27	3.82	16.59	3.86	17.23	3.93	17.88	4.00
							18	14.45	3.73	15.07	3.80	15.69	3.88	16.01	3.91	16.32	3.95	16.97	4.03	17.62	4.10
							20	14.19	3.83	14.80	3.90	15.43	3.98	15.74	4.01	16.06	4.05	16.70	4.12	17.36	4.20
							21	14.05	3.88	14.67	3.95	15.30	4.03	15.61	4.06	15.93	4.10	16.57	4.17	17.23	4.25
							23	13.79	3.98	14.41	4.05	15.03	4.13	15.35	4.16	15.67	4.20	16.31	4.27	16.97	4.35
							25	13.52	4.08	14.14	4.15	14.77	4.23	15.09	4.26	15.41	4.30	16.05	4.38	16.71	4.45
							27	13.26	4.18	13.88	4.25	14.51	4.33	14.82	4.37	15.14	4.41	15.79	4.48	16.45	4.56
							29	12.99	4.28	13.61	4.36	14.25	4.44	14.56	4.47	14.88	4.51	15.53	4.59	16.19	4.66
							31	12.73	4.39	13.35	4.47	13.98	4.54	14.30	4.58	14.62	4.62	15.27	4.70	15.93	4.77
							33	12.47	4.50	13.09	4.57	13.72	4.65	14.04	4.69	14.37	4.73	15.02	4.81	15.68	4.88
							35	12.21	4.61	12.83	4.68	13.46	4.76	13.81	4.79	14.11	4.84	14.76	4.92	15.42	4.99
							37	11.95	4.72	12.57	4.80	13.21	4.87	13.53	4.91	13.85	4.95	14.50	5.03	15.17	5.11
							39	11.68	4.83	12.31	4.91	12.95	4.99	13.27	5.03	13.59	5.07	14.25	5.14	14.91	5.22
							42	11.30	5.00	11.92	5.08	12.56	5.16	12.88	5.20	13.21	5.24	13.87	5.32	14.53	5.40
							44	11.04	5.12	11.67	5.20	12.31	5.28	12.63	5.32	12.95	5.36	13.61	5.44	14.28	5.52
							46	10.78	5.24	11.41	5.32	12.05	5.40	12.37	5.44	12.70	5.48	13.36	5.56	14.03	5.64

12. Capacity Table

12-7. AJ140TXJ5KH/EA

COOLING

Combination (Capacity Index)					Combination (Total)	Combination (%)	Outdoor Temperature (°C,DB)	Indoor Temperature(°C, WB)													
								14		16		18		19		20		22		24	
								TC(kW)	PI(kW)	TC(kW)	PI(kW)	TC(kW)	PI(kW)	TC(kW)	PI(kW)	TC(kW)	PI(kW)	TC(kW)	PI(kW)	TC(kW)	PI(kW)
2000	3500	5000	6800		17300	124%	10	15.74	3.40	16.36	3.47	16.99	3.54	17.30	3.58	17.62	3.61	18.27	3.69	18.93	3.76
							12	15.47	3.49	16.09	3.56	16.72	3.63	17.03	3.67	17.35	3.71	18.00	3.78	18.66	3.85
							14	15.20	3.58	15.82	3.65	16.45	3.73	16.76	3.76	17.09	3.80	17.73	3.87	18.39	3.95
							16	14.92	3.67	15.55	3.75	16.18	3.82	16.50	3.86	16.82	3.90	17.47	3.97	18.13	4.04
							18	14.65	3.77	15.28	3.84	15.91	3.92	16.23	3.96	16.55	3.99	17.20	4.07	17.86	4.14
							20	14.38	3.87	15.01	3.94	15.64	4.02	15.96	4.05	16.28	4.09	16.93	4.17	17.60	4.24
							21	14.25	3.92	14.87	3.99	15.51	4.07	15.83	4.10	16.15	4.14	16.80	4.22	17.46	4.29
							23	13.98	4.02	14.60	4.09	15.24	4.17	15.56	4.21	15.88	4.24	16.54	4.32	17.20	4.40
							25	13.71	4.12	14.34	4.20	14.97	4.27	15.29	4.31	15.62	4.35	16.27	4.42	16.94	4.50
							27	13.44	4.22	14.07	4.30	14.71	4.38	15.03	4.41	15.35	4.45	16.01	4.53	16.68	4.61
							29	13.17	4.33	13.80	4.41	14.44	4.48	14.76	4.52	15.09	4.56	15.75	4.64	16.41	4.71
							31	12.91	4.44	13.54	4.51	14.18	4.59	14.50	4.63	14.83	4.67	15.48	4.75	16.15	4.82
							33	12.64	4.54	13.27	4.62	13.91	4.70	14.24	4.74	14.56	4.78	15.22	4.86	15.89	4.93
							35	12.37	4.65	13.01	4.73	13.65	4.81	14.00	4.84	14.30	4.89	14.96	4.97	15.63	5.05
							37	12.11	4.77	12.74	4.85	13.39	4.92	13.71	4.96	14.04	5.00	14.70	5.08	15.37	5.16
							39	11.85	4.88	12.48	4.96	13.13	5.04	13.45	5.08	13.78	5.12	14.44	5.20	15.12	5.28
							42	11.45	5.05	12.09	5.13	12.73	5.21	13.06	5.25	13.39	5.29	14.06	5.37	14.73	5.45
							44	11.19	5.17	11.83	5.25	12.47	5.33	12.80	5.37	13.13	5.41	13.80	5.49	14.47	5.58
							46	10.93	5.29	11.57	5.37	12.22	5.45	12.54	5.49	12.87	5.53	13.54	5.62	14.22	5.70
2000	5000	5000	5000		17000	121%	10	15.74	3.40	16.36	3.47	16.99	3.54	17.30	3.58	17.62	3.61	18.27	3.69	18.93	3.76
							12	15.47	3.49	16.09	3.56	16.72	3.63	17.03	3.67	17.35	3.71	18.00	3.78	18.66	3.85
							14	15.20	3.58	15.82	3.65	16.45	3.73	16.76	3.76	17.09	3.80	17.73	3.87	18.39	3.95
							16	14.92	3.67	15.55	3.75	16.18	3.82	16.50	3.86	16.82	3.90	17.47	3.97	18.13	4.04
							18	14.65	3.77	15.28	3.84	15.91	3.92	16.23	3.96	16.55	3.99	17.20	4.07	17.86	4.14
							20	14.38	3.87	15.01	3.94	15.64	4.02	15.96	4.05	16.28	4.09	16.93	4.17	17.60	4.24
							21	14.25	3.92	14.87	3.99	15.51	4.07	15.83	4.10	16.15	4.14	16.80	4.22	17.46	4.29
							23	13.98	4.02	14.60	4.09	15.24	4.17	15.56	4.21	15.88	4.24	16.54	4.32	17.20	4.40
							25	13.71	4.12	14.34	4.20	14.97	4.27	15.29	4.31	15.62	4.35	16.27	4.42	16.94	4.50
							27	13.44	4.22	14.07	4.30	14.71	4.38	15.03	4.41	15.35	4.45	16.01	4.53	16.68	4.61
							29	13.17	4.33	13.80	4.41	14.44	4.48	14.76	4.52	15.09	4.56	15.75	4.64	16.41	4.71
							31	12.91	4.44	13.54	4.51	14.18	4.59	14.50	4.63	14.83	4.67	15.48	4.75	16.15	4.82
							33	12.64	4.54	13.27	4.62	13.91	4.70	14.24	4.74	14.56	4.78	15.22	4.86	15.89	4.93
							35	12.37	4.65	13.01	4.73	13.65	4.81	14.00	4.84	14.30	4.89	14.96	4.97	15.63	5.05
							37	12.11	4.77	12.74	4.85	13.39	4.92	13.71	4.96	14.04	5.00	14.70	5.08	15.37	5.16
							39	11.85	4.88	12.48	4.96	13.13	5.04	13.45	5.08	13.78	5.12	14.44	5.20	15.12	5.28
							42	11.45	5.05	12.09	5.13	12.73	5.21	13.06	5.25	13.39	5.29	14.06	5.37	14.73	5.45
							44	11.19	5.17	11.83	5.25	12.47	5.33	12.80	5.37	13.13	5.41	13.80	5.49	14.47	5.58
							46	10.93	5.29	11.57	5.37	12.22	5.45	12.54	5.49	12.87	5.53	13.54	5.62	14.22	5.70

12. Capacity Table

12-7. AJ140TXJ5KH/EA

COOLING

Combination (Capacity Index)					Combination (Total)	Combination (%)	Outdoor Temperature (°C,DB)	Indoor Temperature(°C, WB)													
								14		16		18		19		20		22		24	
								TC(kW)	PI(kW)	TC(kW)	PI(kW)	TC(kW)	PI(kW)	TC(kW)	PI(kW)	TC(kW)	PI(kW)	TC(kW)	PI(kW)	TC(kW)	PI(kW)
2500	2500	2500	2500		10000	71%	10	9.32	2.32	13.15	2.38	13.40	2.43	13.55	2.46	13.72	2.49	14.10	2.54	14.55	2.59
							12	9.32	2.38	12.79	2.44	13.06	2.49	13.22	2.52	13.40	2.55	13.80	2.60	14.27	2.65
							14	9.32	2.44	12.45	2.49	12.74	2.55	12.90	2.58	13.09	2.61	13.51	2.66	14.00	2.71
							16	9.32	2.50	12.12	2.56	12.43	2.61	12.60	2.64	12.80	2.67	13.23	2.72	13.74	2.77
							18	9.32	2.56	11.81	2.62	12.13	2.68	12.32	2.70	12.52	2.73	12.98	2.78	13.50	2.83
							20	9.32	2.63	11.51	2.68	11.85	2.74	12.04	2.77	12.26	2.79	12.73	2.85	13.27	2.89
							21	9.32	2.66	11.37	2.72	11.71	2.77	11.91	2.80	12.13	2.83	12.61	2.88	13.17	2.93
							23	9.32	2.73	11.09	2.79	11.46	2.84	11.66	2.87	11.89	2.89	12.39	2.95	12.96	2.99
							25	9.32	2.80	10.83	2.85	11.21	2.91	11.43	2.94	11.66	2.96	12.18	3.01	12.77	3.06
							27	9.32	2.87	10.58	2.93	10.98	2.98	11.21	3.01	11.45	3.03	11.99	3.08	12.60	3.13
							29	9.32	2.94	10.34	3.00	10.77	3.05	11.00	3.08	11.26	3.11	11.81	3.16	12.44	3.21
							31	9.32	3.02	10.13	3.07	10.57	3.13	10.81	3.15	11.07	3.18	11.65	3.23	12.29	3.28
							33	9.32	3.09	9.92	3.15	10.38	3.20	10.63	3.23	10.91	3.26	11.50	3.31	12.16	3.35
							35	9.32	3.17	9.73	3.23	10.21	3.28	10.55	3.30	10.75	3.33	11.36	3.38	12.04	3.43
							37	9.32	3.25	9.56	3.31	10.05	3.36	10.33	3.39	10.61	3.41	11.24	3.46	11.94	3.51
							39	9.32	3.33	9.40	3.39	9.91	3.44	10.19	3.47	10.49	3.49	11.14	3.54	11.85	3.59
							42	9.32	3.46	9.19	3.52	9.73	3.57	10.02	3.59	10.33	3.62	11.01	3.67	11.75	3.72
							44	9.32	3.55	9.06	3.60	9.62	3.65	9.93	3.68	10.25	3.71	10.94	3.75	11.70	3.80
							46	9.32	3.63	8.95	3.69	9.53	3.74	9.84	3.77	10.17	3.79	10.89	3.84	11.66	3.89
2500	2500	2500	3500		11000	79%	10	10.10	2.85	14.25	2.92	14.52	2.99	14.68	3.03	14.86	3.06	15.28	3.13	15.77	3.19
							12	10.10	2.92	13.86	3.00	14.15	3.07	14.32	3.10	14.51	3.13	14.95	3.20	15.46	3.26
							14	10.10	3.00	13.49	3.07	13.80	3.14	13.98	3.17	14.18	3.21	14.64	3.27	15.16	3.33
							16	10.10	3.07	13.13	3.14	13.46	3.21	13.65	3.25	13.86	3.28	14.34	3.34	14.89	3.41
							18	10.10	3.15	12.79	3.22	13.14	3.29	13.34	3.32	13.56	3.36	14.06	3.42	14.63	3.48
							20	10.10	3.23	12.47	3.30	12.84	3.37	13.05	3.40	13.28	3.44	13.79	3.50	14.38	3.56
							21	10.10	3.27	12.31	3.34	12.69	3.41	12.91	3.44	13.14	3.48	13.67	3.54	14.26	3.60
							23	10.10	3.36	12.01	3.43	12.41	3.49	12.64	3.53	12.88	3.56	13.43	3.62	14.04	3.68
							25	10.10	3.44	11.73	3.51	12.15	3.58	12.38	3.61	12.64	3.65	13.20	3.71	13.84	3.77
							27	10.10	3.53	11.46	3.60	11.90	3.67	12.14	3.70	12.41	3.73	12.99	3.79	13.65	3.85
							29	10.10	3.62	11.21	3.69	11.66	3.76	11.92	3.79	12.19	3.82	12.80	3.88	13.47	3.94
							31	10.10	3.71	10.97	3.78	11.45	3.85	11.71	3.88	12.00	3.91	12.62	3.97	13.32	4.03
							33	10.10	3.81	10.75	3.88	11.25	3.94	11.52	3.97	11.82	4.01	12.46	4.07	13.17	4.13
							35	10.10	3.90	10.54	3.97	11.06	4.04	11.43	4.06	11.65	4.10	12.31	4.16	13.05	4.22
							37	10.10	4.00	10.36	4.07	10.89	4.14	11.19	4.17	11.50	4.20	12.18	4.26	12.94	4.32
							39	10.10	4.10	10.18	4.17	10.74	4.24	11.04	4.27	11.37	4.30	12.07	4.36	12.84	4.42
							42	10.10	4.26	9.95	4.32	10.54	4.39	10.86	4.42	11.20	4.45	11.93	4.51	12.73	4.57
							44	10.10	4.36	9.82	4.43	10.42	4.50	10.75	4.53	11.10	4.56	11.85	4.62	12.68	4.68
							46	10.10	4.47	9.70	4.54	10.33	4.60	10.67	4.64	11.02	4.67	11.79	4.73	12.64	4.78

12. Capacity Table

12-7. AJ140TXJ5KH/EA

COOLING

Combination (Capacity Index)					Combination (Total)	Combination (%)	Outdoor Temperature (°C,DB)	Indoor Temperature(°C, WB)													
								14		16		18		19		20		22		24	
								TC(kW)	PI(kW)	TC(kW)	PI(kW)	TC(kW)	PI(kW)	TC(kW)	PI(kW)	TC(kW)	PI(kW)	TC(kW)	PI(kW)	TC(kW)	PI(kW)
2500	2500	2500	5000		12500	89%	10	10.69	2.75	15.08	2.82	15.37	2.88	15.54	2.92	15.73	2.95	16.17	3.01	16.69	3.07
							12	10.69	2.82	14.67	2.89	14.98	2.95	15.16	2.98	15.36	3.02	15.82	3.08	16.36	3.14
							14	10.69	2.89	14.28	2.96	14.61	3.02	14.80	3.05	15.01	3.09	15.49	3.15	16.05	3.21
							16	10.69	2.96	13.90	3.03	14.25	3.10	14.45	3.13	14.68	3.16	15.18	3.22	15.76	3.28
							18	10.69	3.04	13.54	3.10	13.91	3.17	14.13	3.20	14.36	3.23	14.88	3.30	15.48	3.35
							20	10.69	3.11	13.20	3.18	13.59	3.25	13.81	3.28	14.06	3.31	14.60	3.37	15.22	3.43
							21	10.69	3.15	13.03	3.22	13.44	3.29	13.66	3.32	13.91	3.35	14.47	3.41	15.10	3.47
							23	10.69	3.23	12.72	3.30	13.14	3.37	13.38	3.40	13.64	3.43	14.21	3.49	14.87	3.55
							25	10.69	3.31	12.42	3.38	12.86	3.45	13.11	3.48	13.38	3.51	13.97	3.57	14.65	3.63
							27	10.69	3.40	12.13	3.47	12.59	3.53	12.85	3.56	13.13	3.59	13.75	3.65	14.45	3.71
							29	10.69	3.49	11.86	3.55	12.35	3.62	12.62	3.65	12.91	3.68	13.55	3.74	14.26	3.80
							31	10.69	3.57	11.61	3.64	12.12	3.71	12.40	3.74	12.70	3.77	13.36	3.83	14.10	3.89
							33	10.69	3.67	11.38	3.73	11.91	3.80	12.20	3.83	12.51	3.86	13.19	3.92	13.95	3.97
							35	10.69	3.76	11.16	3.82	11.71	3.89	12.10	3.91	12.33	3.95	13.03	4.01	13.81	4.07
							37	10.69	3.85	10.96	3.92	11.53	3.98	11.84	4.01	12.17	4.04	12.90	4.10	13.70	4.16
							39	10.69	3.95	10.78	4.02	11.37	4.08	11.69	4.11	12.03	4.14	12.78	4.20	13.60	4.26
							42	10.69	4.10	10.54	4.17	11.16	4.23	11.49	4.26	11.85	4.29	12.63	4.35	13.48	4.40
							44	10.69	4.20	10.39	4.27	11.03	4.33	11.38	4.36	11.75	4.39	12.55	4.45	13.42	4.50
							46	10.69	4.31	10.27	4.37	10.93	4.43	11.29	4.46	11.67	4.49	12.49	4.55	13.38	4.61
2500	2500	2500	6800		14300	102%	10	14.05	3.12	14.61	3.19	15.17	3.26	15.45	3.29	15.74	3.32	16.31	3.39	16.90	3.46
							12	13.81	3.21	14.36	3.27	14.93	3.34	15.21	3.37	15.50	3.41	16.07	3.47	16.66	3.54
							14	13.57	3.29	14.12	3.36	14.68	3.43	14.97	3.46	15.25	3.49	15.83	3.56	16.42	3.63
							16	13.32	3.38	13.88	3.45	14.44	3.51	14.73	3.55	15.02	3.58	15.60	3.65	16.18	3.72
							18	13.08	3.47	13.64	3.53	14.20	3.60	14.49	3.64	14.78	3.67	15.36	3.74	15.95	3.81
							20	12.84	3.56	13.40	3.62	13.96	3.69	14.25	3.73	14.54	3.76	15.12	3.83	15.71	3.90
							21	12.72	3.60	13.28	3.67	13.84	3.74	14.13	3.77	14.42	3.81	15.00	3.88	15.59	3.95
							23	12.48	3.69	13.04	3.76	13.61	3.83	13.89	3.87	14.18	3.90	14.77	3.97	15.36	4.04
							25	12.24	3.79	12.80	3.86	13.37	3.93	13.66	3.96	13.94	4.00	14.53	4.07	15.12	4.14
							27	12.00	3.88	12.56	3.95	13.13	4.02	13.42	4.06	13.71	4.09	14.29	4.16	14.89	4.23
							29	11.76	3.98	12.32	4.05	12.89	4.12	13.18	4.16	13.47	4.19	14.06	4.26	14.66	4.33
							31	11.52	4.08	12.09	4.15	12.66	4.22	12.95	4.26	13.24	4.29	13.83	4.36	14.42	4.43
							33	11.29	4.18	11.85	4.25	12.42	4.32	12.71	4.36	13.00	4.39	13.59	4.46	14.19	4.54
							35	11.05	4.28	11.61	4.35	12.19	4.42	12.50	4.45	12.77	4.50	13.36	4.57	13.96	4.64
							37	10.81	4.38	11.38	4.45	11.95	4.53	12.24	4.56	12.54	4.60	13.13	4.67	13.73	4.75
							39	10.58	4.49	11.14	4.56	11.72	4.63	12.01	4.67	12.30	4.71	12.90	4.78	13.50	4.85
							42	10.22	4.65	10.79	4.72	11.37	4.79	11.66	4.83	11.96	4.87	12.55	4.94	13.15	5.02
							44	9.99	4.76	10.56	4.83	11.14	4.90	11.43	4.94	11.72	4.98	12.32	5.05	12.92	5.13
							46	9.76	4.87	10.33	4.94	10.91	5.01	11.20	5.05	11.49	5.09	12.09	5.16	12.69	5.24

12. Capacity Table

12-7. AJ140TXJ5KH/EA

COOLING

Combination (Capacity Index)					Combination (Total)	Combination (%)	Outdoor Temperature (°C,DB)	Indoor Temperature(°C, WB)													
								14		16		18		19		20		22		24	
								TC(kW)	PI(kW)	TC(kW)	PI(kW)	TC(kW)	PI(kW)	TC(kW)	PI(kW)	TC(kW)	PI(kW)	TC(kW)	PI(kW)	TC(kW)	PI(kW)
2500	2500	3500	3500		12000	86%	10	10.69	2.75	15.08	2.82	15.37	2.88	15.54	2.92	15.73	2.95	16.17	3.01	16.69	3.07
							12	10.69	2.82	14.67	2.89	14.98	2.95	15.16	2.98	15.36	3.02	15.82	3.08	16.36	3.14
							14	10.69	2.89	14.28	2.96	14.61	3.02	14.80	3.05	15.01	3.09	15.49	3.15	16.05	3.21
							16	10.69	2.96	13.90	3.03	14.25	3.10	14.45	3.13	14.68	3.16	15.18	3.22	15.76	3.28
							18	10.69	3.04	13.54	3.10	13.91	3.17	14.13	3.20	14.36	3.23	14.88	3.30	15.48	3.35
							20	10.69	3.11	13.20	3.18	13.59	3.25	13.81	3.28	14.06	3.31	14.60	3.37	15.22	3.43
							21	10.69	3.15	13.03	3.22	13.44	3.29	13.66	3.32	13.91	3.35	14.47	3.41	15.10	3.47
							23	10.69	3.23	12.72	3.30	13.14	3.37	13.38	3.40	13.64	3.43	14.21	3.49	14.87	3.55
							25	10.69	3.31	12.42	3.38	12.86	3.45	13.11	3.48	13.38	3.51	13.97	3.57	14.65	3.63
							27	10.69	3.40	12.13	3.47	12.59	3.53	12.85	3.56	13.13	3.59	13.75	3.65	14.45	3.71
							29	10.69	3.49	11.86	3.55	12.35	3.62	12.62	3.65	12.91	3.68	13.55	3.74	14.26	3.80
							31	10.69	3.57	11.61	3.64	12.12	3.71	12.40	3.74	12.70	3.77	13.36	3.83	14.10	3.89
							33	10.69	3.67	11.38	3.73	11.91	3.80	12.20	3.83	12.51	3.86	13.19	3.92	13.95	3.97
							35	10.69	3.76	11.16	3.82	11.71	3.89	12.10	3.91	12.33	3.95	13.03	4.01	13.81	4.07
							37	10.69	3.85	10.96	3.92	11.53	3.98	11.84	4.01	12.17	4.04	12.90	4.10	13.70	4.16
							39	10.69	3.95	10.78	4.02	11.37	4.08	11.69	4.11	12.03	4.14	12.78	4.20	13.60	4.26
							42	10.69	4.10	10.54	4.17	11.16	4.23	11.49	4.26	11.85	4.29	12.63	4.35	13.48	4.40
							44	10.69	4.20	10.39	4.27	11.03	4.33	11.38	4.36	11.75	4.39	12.55	4.45	13.42	4.50
							46	10.69	4.31	10.27	4.37	10.93	4.43	11.29	4.46	11.67	4.49	12.49	4.55	13.38	4.61
2500	2500	3500	5000		13500	96%	10	13.61	2.74	14.14	2.80	14.68	2.86	14.96	2.89	15.23	2.92	15.79	2.98	16.36	3.04
							12	13.37	2.82	13.90	2.88	14.45	2.93	14.72	2.96	15.00	2.99	15.56	3.05	16.13	3.11
							14	13.13	2.89	13.67	2.95	14.21	3.01	14.49	3.04	14.77	3.07	15.33	3.13	15.90	3.19
							16	12.90	2.97	13.44	3.03	13.98	3.09	14.26	3.12	14.53	3.15	15.10	3.21	15.67	3.27
							18	12.66	3.05	13.20	3.11	13.75	3.17	14.03	3.20	14.30	3.23	14.87	3.29	15.44	3.35
							20	12.43	3.12	12.97	3.18	13.52	3.25	13.79	3.28	14.07	3.31	14.64	3.37	15.21	3.43
							21	12.31	3.16	12.85	3.22	13.40	3.29	13.68	3.32	13.96	3.35	14.52	3.41	15.09	3.47
							23	12.08	3.25	12.62	3.31	13.17	3.37	13.45	3.40	13.73	3.43	14.29	3.49	14.87	3.55
							25	11.85	3.33	12.39	3.39	12.94	3.45	13.22	3.48	13.50	3.51	14.06	3.57	14.64	3.63
							27	11.62	3.41	12.16	3.47	12.71	3.54	12.99	3.57	13.27	3.60	13.84	3.66	14.41	3.72
							29	11.39	3.50	11.93	3.56	12.48	3.62	12.76	3.65	13.04	3.68	13.61	3.75	14.19	3.81
							31	11.15	3.58	11.70	3.65	12.25	3.71	12.53	3.74	12.81	3.77	13.38	3.83	13.96	3.90
							33	10.92	3.67	11.47	3.73	12.02	3.80	12.30	3.83	12.59	3.86	13.16	3.92	13.74	3.99
							35	10.70	3.76	11.24	3.82	11.80	3.89	12.10	3.91	12.36	3.95	12.93	4.01	13.51	4.08
							37	10.47	3.85	11.01	3.91	11.57	3.98	11.85	4.01	12.14	4.04	12.71	4.11	13.29	4.17
							39	10.24	3.94	10.79	4.01	11.34	4.07	11.63	4.10	11.91	4.13	12.48	4.20	13.06	4.26
							42	9.90	4.08	10.45	4.15	11.01	4.21	11.29	4.24	11.57	4.28	12.15	4.34	12.73	4.41
							44	9.67	4.18	10.22	4.24	10.78	4.31	11.06	4.34	11.35	4.37	11.93	4.44	12.51	4.50
							46	9.44	4.27	10.00	4.34	10.56	4.41	10.84	4.44	11.13	4.47	11.70	4.54	12.29	4.60

12. Capacity Table

12-7. AJ140TXJ5KH/EA

COOLING

Combination (Capacity Index)					Combination (Total)	Combination (%)	Outdoor Temperature (°C,DB)	Indoor Temperature(°C, WB)													
								14		16		18		19		20		22		24	
								TC(kW)	PI(kW)	TC(kW)	PI(kW)	TC(kW)	PI(kW)	TC(kW)	PI(kW)	TC(kW)	PI(kW)	TC(kW)	PI(kW)	TC(kW)	PI(kW)
2500	2500	3500	6800		15300	109%	10	14.86	3.26	15.45	3.32	16.04	3.39	16.34	3.43	16.64	3.46	17.25	3.53	17.87	3.60
							12	14.61	3.34	15.19	3.41	15.79	3.48	16.09	3.52	16.39	3.55	17.00	3.62	17.62	3.69
							14	14.35	3.43	14.94	3.50	15.53	3.57	15.83	3.61	16.13	3.64	16.75	3.71	17.37	3.78
							16	14.09	3.52	14.68	3.59	15.28	3.66	15.58	3.70	15.88	3.73	16.49	3.81	17.12	3.88
							18	13.84	3.61	14.42	3.69	15.02	3.76	15.32	3.79	15.63	3.83	16.24	3.90	16.87	3.97
							20	13.58	3.71	14.17	3.78	14.77	3.85	15.07	3.89	15.38	3.92	15.99	3.99	16.62	4.07
							21	13.45	3.76	14.04	3.83	14.64	3.90	14.94	3.94	15.25	3.97	15.87	4.04	16.49	4.12
							23	13.20	3.85	13.79	3.92	14.39	4.00	14.69	4.03	15.00	4.07	15.62	4.14	16.24	4.21
							25	12.94	3.95	13.54	4.02	14.14	4.09	14.44	4.13	14.75	4.17	15.37	4.24	15.99	4.31
							27	12.69	4.05	13.28	4.12	13.89	4.20	14.19	4.23	14.50	4.27	15.12	4.34	15.75	4.42
							29	12.44	4.15	13.03	4.22	13.64	4.30	13.94	4.33	14.25	4.37	14.87	4.44	15.50	4.52
							31	12.19	4.25	12.78	4.33	13.39	4.40	13.69	4.44	14.00	4.47	14.62	4.55	15.25	4.62
							33	11.94	4.36	12.53	4.43	13.14	4.51	13.44	4.54	13.75	4.58	14.38	4.66	15.01	4.73
							35	11.68	4.46	12.28	4.54	12.89	4.61	13.22	4.64	13.50	4.69	14.13	4.76	14.76	4.84
							37	11.43	4.57	12.03	4.65	12.64	4.72	12.95	4.76	13.26	4.80	13.88	4.87	14.52	4.95
							39	11.19	4.68	11.79	4.75	12.39	4.83	12.70	4.87	13.01	4.91	13.64	4.98	14.27	5.06
							42	10.81	4.85	11.41	4.92	12.03	5.00	12.33	5.04	12.64	5.08	13.27	5.15	13.91	5.23
							44	10.57	4.96	11.17	5.04	11.78	5.11	12.09	5.15	12.40	5.19	13.03	5.27	13.67	5.34
							46	10.32	5.07	10.92	5.15	11.53	5.23	11.84	5.27	12.16	5.31	12.79	5.38	13.43	5.46
2500	2500	5000	5000		15000	107%	10	15.09	3.29	15.68	3.36	16.28	3.43	16.59	3.47	16.89	3.50	17.51	3.57	18.14	3.64
							12	14.83	3.38	15.42	3.45	16.02	3.52	16.33	3.56	16.64	3.59	17.26	3.66	17.89	3.73
							14	14.57	3.47	15.16	3.54	15.76	3.61	16.07	3.65	16.38	3.68	17.00	3.75	17.63	3.82
							16	14.31	3.56	14.90	3.63	15.51	3.70	15.81	3.74	16.12	3.77	16.74	3.85	17.38	3.92
							18	14.05	3.65	14.64	3.72	15.25	3.80	15.56	3.83	15.86	3.87	16.49	3.94	17.12	4.01
							20	13.79	3.75	14.38	3.82	14.99	3.89	15.30	3.93	15.61	3.97	16.23	4.04	16.87	4.11
							21	13.66	3.80	14.26	3.87	14.86	3.94	15.17	3.98	15.48	4.01	16.11	4.09	16.74	4.16
							23	13.40	3.89	14.00	3.97	14.61	4.04	14.92	4.08	15.23	4.11	15.85	4.19	16.49	4.26
							25	13.14	3.99	13.74	4.07	14.35	4.14	14.66	4.18	14.97	4.21	15.60	4.29	16.24	4.36
							27	12.88	4.09	13.49	4.17	14.10	4.24	14.41	4.28	14.72	4.31	15.35	4.39	15.98	4.46
							29	12.63	4.19	13.23	4.27	13.84	4.34	14.15	4.38	14.46	4.42	15.09	4.49	15.73	4.57
							31	12.37	4.30	12.98	4.37	13.59	4.45	13.90	4.49	14.21	4.52	14.84	4.60	15.48	4.67
							33	12.12	4.40	12.72	4.48	13.34	4.55	13.65	4.59	13.96	4.63	14.59	4.71	15.23	4.78
							35	11.86	4.51	12.47	4.59	13.08	4.66	13.42	4.69	13.71	4.74	14.34	4.81	14.99	4.89
							37	11.61	4.62	12.22	4.70	12.83	4.77	13.14	4.81	13.46	4.85	14.09	4.92	14.74	5.00
							39	11.35	4.73	11.96	4.81	12.58	4.88	12.89	4.92	13.21	4.96	13.85	5.04	14.49	5.11
							42	10.98	4.90	11.59	4.98	12.21	5.05	12.52	5.09	12.84	5.13	13.47	5.21	14.12	5.29
							44	10.72	5.01	11.34	5.09	11.96	5.17	12.27	5.21	12.59	5.25	13.23	5.32	13.87	5.40
							46	10.47	5.13	11.09	5.21	11.71	5.28	12.02	5.32	12.34	5.36	12.98	5.44	13.63	5.52

12. Capacity Table

12-7. AJ140TXJ5KH/EA

COOLING

Combination (Capacity Index)					Combination (Total)	Combination (%)	Outdoor Temperature (°C,DB)	Indoor Temperature(°C, WB)													
								14		16		18		19		20		22		24	
								TC(kW)	PI(kW)	TC(kW)	PI(kW)	TC(kW)	PI(kW)	TC(kW)	PI(kW)	TC(kW)	PI(kW)	TC(kW)	PI(kW)	TC(kW)	PI(kW)
2500	2500	5000	6800		16800	120%	10	15.74	3.40	16.36	3.47	16.99	3.54	17.30	3.58	17.62	3.61	18.27	3.69	18.93	3.76
							12	15.47	3.49	16.09	3.56	16.72	3.63	17.03	3.67	17.35	3.71	18.00	3.78	18.66	3.85
							14	15.20	3.58	15.82	3.65	16.45	3.73	16.76	3.76	17.09	3.80	17.73	3.87	18.39	3.95
							16	14.92	3.67	15.55	3.75	16.18	3.82	16.50	3.86	16.82	3.90	17.47	3.97	18.13	4.04
							18	14.65	3.77	15.28	3.84	15.91	3.92	16.23	3.96	16.55	3.99	17.20	4.07	17.86	4.14
							20	14.38	3.87	15.01	3.94	15.64	4.02	15.96	4.05	16.28	4.09	16.93	4.17	17.60	4.24
							21	14.25	3.92	14.87	3.99	15.51	4.07	15.83	4.10	16.15	4.14	16.80	4.22	17.46	4.29
							23	13.98	4.02	14.60	4.09	15.24	4.17	15.56	4.21	15.88	4.24	16.54	4.32	17.20	4.40
							25	13.71	4.12	14.34	4.20	14.97	4.27	15.29	4.31	15.62	4.35	16.27	4.42	16.94	4.50
							27	13.44	4.22	14.07	4.30	14.71	4.38	15.03	4.41	15.35	4.45	16.01	4.53	16.68	4.61
							29	13.17	4.33	13.80	4.41	14.44	4.48	14.76	4.52	15.09	4.56	15.75	4.64	16.41	4.71
							31	12.91	4.44	13.54	4.51	14.18	4.59	14.50	4.63	14.83	4.67	15.48	4.75	16.15	4.82
							33	12.64	4.54	13.27	4.62	13.91	4.70	14.24	4.74	14.56	4.78	15.22	4.86	15.89	4.93
							35	12.37	4.65	13.01	4.73	13.65	4.81	14.00	4.84	14.30	4.89	14.96	4.97	15.63	5.05
							37	12.11	4.77	12.74	4.85	13.39	4.92	13.71	4.96	14.04	5.00	14.70	5.08	15.37	5.16
							39	11.85	4.88	12.48	4.96	13.13	5.04	13.45	5.08	13.78	5.12	14.44	5.20	15.12	5.28
							42	11.45	5.05	12.09	5.13	12.73	5.21	13.06	5.25	13.39	5.29	14.06	5.37	14.73	5.45
							44	11.19	5.17	11.83	5.25	12.47	5.33	12.80	5.37	13.13	5.41	13.80	5.49	14.47	5.58
							46	10.93	5.29	11.57	5.37	12.22	5.45	12.54	5.49	12.87	5.53	13.54	5.62	14.22	5.70
2500	3500	3500	3500		13000	93%	10	10.69	2.75	15.08	2.82	15.37	2.88	15.54	2.92	15.73	2.95	16.17	3.01	16.69	3.07
							12	10.69	2.82	14.67	2.89	14.98	2.95	15.16	2.98	15.36	3.02	15.82	3.08	16.36	3.14
							14	10.69	2.89	14.28	2.96	14.61	3.02	14.80	3.05	15.01	3.09	15.49	3.15	16.05	3.21
							16	10.69	2.96	13.90	3.03	14.25	3.10	14.45	3.13	14.68	3.16	15.18	3.22	15.76	3.28
							18	10.69	3.04	13.54	3.10	13.91	3.17	14.13	3.20	14.36	3.23	14.88	3.30	15.48	3.35
							20	10.69	3.11	13.20	3.18	13.59	3.25	13.81	3.28	14.06	3.31	14.60	3.37	15.22	3.43
							21	10.69	3.15	13.03	3.22	13.44	3.29	13.66	3.32	13.91	3.35	14.47	3.41	15.10	3.47
							23	10.69	3.23	12.72	3.30	13.14	3.37	13.38	3.40	13.64	3.43	14.21	3.49	14.87	3.55
							25	10.69	3.31	12.42	3.38	12.86	3.45	13.11	3.48	13.38	3.51	13.97	3.57	14.65	3.63
							27	10.69	3.40	12.13	3.47	12.59	3.53	12.85	3.56	13.13	3.59	13.75	3.65	14.45	3.71
							29	10.69	3.49	11.86	3.55	12.35	3.62	12.62	3.65	12.91	3.68	13.55	3.74	14.26	3.80
							31	10.69	3.57	11.61	3.64	12.12	3.71	12.40	3.74	12.70	3.77	13.36	3.83	14.10	3.89
							33	10.69	3.67	11.38	3.73	11.91	3.80	12.20	3.83	12.51	3.86	13.19	3.92	13.95	3.97
							35	10.69	3.76	11.16	3.82	11.71	3.89	12.10	3.91	12.33	3.95	13.03	4.01	13.81	4.07
							37	10.69	3.85	10.96	3.92	11.53	3.98	11.84	4.01	12.17	4.04	12.90	4.10	13.70	4.16
							39	10.69	3.95	10.78	4.02	11.37	4.08	11.69	4.11	12.03	4.14	12.78	4.20	13.60	4.26
							42	10.69	4.10	10.54	4.17	11.16	4.23	11.49	4.26	11.85	4.29	12.63	4.35	13.48	4.40
							44	10.69	4.20	10.39	4.27	11.03	4.33	11.38	4.36	11.75	4.39	12.55	4.45	13.42	4.50
							46	10.69	4.31	10.27	4.37	10.93	4.43	11.29	4.46	11.67	4.49	12.49	4.55	13.38	4.61

12. Capacity Table

12-7. AJ140TXJ5KH/EA

COOLING

Combination (Capacity Index)					Combination (Total)	Combination (%)	Outdoor Temperature (°C,DB)	Indoor Temperature(°C, WB)													
								14		16		18		19		20		22		24	
								TC(kW)	PI(kW)	TC(kW)	PI(kW)	TC(kW)	PI(kW)	TC(kW)	PI(kW)	TC(kW)	PI(kW)	TC(kW)	PI(kW)	TC(kW)	PI(kW)
2500	3500	3500	5000		14500	104%	10	14.05	3.12	14.61	3.19	15.17	3.26	15.45	3.29	15.74	3.32	16.31	3.39	16.90	3.46
							12	13.81	3.21	14.36	3.27	14.93	3.34	15.21	3.37	15.50	3.41	16.07	3.47	16.66	3.54
							14	13.57	3.29	14.12	3.36	14.68	3.43	14.97	3.46	15.25	3.49	15.83	3.56	16.42	3.63
							16	13.32	3.38	13.88	3.45	14.44	3.51	14.73	3.55	15.02	3.58	15.60	3.65	16.18	3.72
							18	13.08	3.47	13.64	3.53	14.20	3.60	14.49	3.64	14.78	3.67	15.36	3.74	15.95	3.81
							20	12.84	3.56	13.40	3.62	13.96	3.69	14.25	3.73	14.54	3.76	15.12	3.83	15.71	3.90
							21	12.72	3.60	13.28	3.67	13.84	3.74	14.13	3.77	14.42	3.81	15.00	3.88	15.59	3.95
							23	12.48	3.69	13.04	3.76	13.61	3.83	13.89	3.87	14.18	3.90	14.77	3.97	15.36	4.04
							25	12.24	3.79	12.80	3.86	13.37	3.93	13.66	3.96	13.94	4.00	14.53	4.07	15.12	4.14
							27	12.00	3.88	12.56	3.95	13.13	4.02	13.42	4.06	13.71	4.09	14.29	4.16	14.89	4.23
							29	11.76	3.98	12.32	4.05	12.89	4.12	13.18	4.16	13.47	4.19	14.06	4.26	14.66	4.33
							31	11.52	4.08	12.09	4.15	12.66	4.22	12.95	4.26	13.24	4.29	13.83	4.36	14.42	4.43
							33	11.29	4.18	11.85	4.25	12.42	4.32	12.71	4.36	13.00	4.39	13.59	4.46	14.19	4.54
							35	11.05	4.28	11.61	4.35	12.19	4.42	12.50	4.45	12.77	4.50	13.36	4.57	13.96	4.64
							37	10.81	4.38	11.38	4.45	11.95	4.53	12.24	4.56	12.54	4.60	13.13	4.67	13.73	4.75
							39	10.58	4.49	11.14	4.56	11.72	4.63	12.01	4.67	12.30	4.71	12.90	4.78	13.50	4.85
							42	10.22	4.65	10.79	4.72	11.37	4.79	11.66	4.83	11.96	4.87	12.55	4.94	13.15	5.02
							44	9.99	4.76	10.56	4.83	11.14	4.90	11.43	4.94	11.72	4.98	12.32	5.05	12.92	5.13
							46	9.76	4.87	10.33	4.94	10.91	5.01	11.20	5.05	11.49	5.09	12.09	5.16	12.69	5.24
2500	3500	3500	6800		16300	116%	10	15.74	3.40	16.36	3.47	16.99	3.54	17.30	3.58	17.62	3.61	18.27	3.69	18.93	3.76
							12	15.47	3.49	16.09	3.56	16.72	3.63	17.03	3.67	17.35	3.71	18.00	3.78	18.66	3.85
							14	15.20	3.58	15.82	3.65	16.45	3.73	16.76	3.76	17.09	3.80	17.73	3.87	18.39	3.95
							16	14.92	3.67	15.55	3.75	16.18	3.82	16.50	3.86	16.82	3.90	17.47	3.97	18.13	4.04
							18	14.65	3.77	15.28	3.84	15.91	3.92	16.23	3.96	16.55	3.99	17.20	4.07	17.86	4.14
							20	14.38	3.87	15.01	3.94	15.64	4.02	15.96	4.05	16.28	4.09	16.93	4.17	17.60	4.24
							21	14.25	3.92	14.87	3.99	15.51	4.07	15.83	4.10	16.15	4.14	16.80	4.22	17.46	4.29
							23	13.98	4.02	14.60	4.09	15.24	4.17	15.56	4.21	15.88	4.24	16.54	4.32	17.20	4.40
							25	13.71	4.12	14.34	4.20	14.97	4.27	15.29	4.31	15.62	4.35	16.27	4.42	16.94	4.50
							27	13.44	4.22	14.07	4.30	14.71	4.38	15.03	4.41	15.35	4.45	16.01	4.53	16.68	4.61
							29	13.17	4.33	13.80	4.41	14.44	4.48	14.76	4.52	15.09	4.56	15.75	4.64	16.41	4.71
							31	12.91	4.44	13.54	4.51	14.18	4.59	14.50	4.63	14.83	4.67	15.48	4.75	16.15	4.82
							33	12.64	4.54	13.27	4.62	13.91	4.70	14.24	4.74	14.56	4.78	15.22	4.86	15.89	4.93
							35	12.37	4.65	13.01	4.73	13.65	4.81	14.00	4.84	14.30	4.89	14.96	4.97	15.63	5.05
							37	12.11	4.77	12.74	4.85	13.39	4.92	13.71	4.96	14.04	5.00	14.70	5.08	15.37	5.16
							39	11.85	4.88	12.48	4.96	13.13	5.04	13.45	5.08	13.78	5.12	14.44	5.20	15.12	5.28
							42	11.45	5.05	12.09	5.13	12.73	5.21	13.06	5.25	13.39	5.29	14.06	5.37	14.73	5.45
							44	11.19	5.17	11.83	5.25	12.47	5.33	12.80	5.37	13.13	5.41	13.80	5.49	14.47	5.58
							46	10.93	5.29	11.57	5.37	12.22	5.45	12.54	5.49	12.87	5.53	13.54	5.62	14.22	5.70

12. Capacity Table

12-7. AJ140TXJ5KH/EA

COOLING

Combination (Capacity Index)					Combination (Total)	Combination (%)	Outdoor Temperature (°C,DB)	Indoor Temperature(°C, WB)													
								14		16		18		19		20		22		24	
								TC(kW)	PI(kW)	TC(kW)	PI(kW)	TC(kW)	PI(kW)	TC(kW)	PI(kW)	TC(kW)	PI(kW)	TC(kW)	PI(kW)	TC(kW)	PI(kW)
2500	3500	5000	5000		16000	114%	10	15.74	3.40	16.36	3.47	16.99	3.54	17.30	3.58	17.62	3.61	18.27	3.69	18.93	3.76
							12	15.47	3.49	16.09	3.56	16.72	3.63	17.03	3.67	17.35	3.71	18.00	3.78	18.66	3.85
							14	15.20	3.58	15.82	3.65	16.45	3.73	16.76	3.76	17.09	3.80	17.73	3.87	18.39	3.95
							16	14.92	3.67	15.55	3.75	16.18	3.82	16.50	3.86	16.82	3.90	17.47	3.97	18.13	4.04
							18	14.65	3.77	15.28	3.84	15.91	3.92	16.23	3.96	16.55	3.99	17.20	4.07	17.86	4.14
							20	14.38	3.87	15.01	3.94	15.64	4.02	15.96	4.05	16.28	4.09	16.93	4.17	17.60	4.24
							21	14.25	3.92	14.87	3.99	15.51	4.07	15.83	4.10	16.15	4.14	16.80	4.22	17.46	4.29
							23	13.98	4.02	14.60	4.09	15.24	4.17	15.56	4.21	15.88	4.24	16.54	4.32	17.20	4.40
							25	13.71	4.12	14.34	4.20	14.97	4.27	15.29	4.31	15.62	4.35	16.27	4.42	16.94	4.50
							27	13.44	4.22	14.07	4.30	14.71	4.38	15.03	4.41	15.35	4.45	16.01	4.53	16.68	4.61
							29	13.17	4.33	13.80	4.41	14.44	4.48	14.76	4.52	15.09	4.56	15.75	4.64	16.41	4.71
							31	12.91	4.44	13.54	4.51	14.18	4.59	14.50	4.63	14.83	4.67	15.48	4.75	16.15	4.82
							33	12.64	4.54	13.27	4.62	13.91	4.70	14.24	4.74	14.56	4.78	15.22	4.86	15.89	4.93
							35	12.37	4.65	13.01	4.73	13.65	4.81	14.00	4.84	14.30	4.89	14.96	4.97	15.63	5.05
							37	12.11	4.77	12.74	4.85	13.39	4.92	13.71	4.96	14.04	5.00	14.70	5.08	15.37	5.16
							39	11.85	4.88	12.48	4.96	13.13	5.04	13.45	5.08	13.78	5.12	14.44	5.20	15.12	5.28
							42	11.45	5.05	12.09	5.13	12.73	5.21	13.06	5.25	13.39	5.29	14.06	5.37	14.73	5.45
							44	11.19	5.17	11.83	5.25	12.47	5.33	12.80	5.37	13.13	5.41	13.80	5.49	14.47	5.58
							46	10.93	5.29	11.57	5.37	12.22	5.45	12.54	5.49	12.87	5.53	13.54	5.62	14.22	5.70
2500	5000	5000	5000		17500	125%	10	15.74	3.40	16.36	3.47	16.99	3.54	17.30	3.58	17.62	3.61	18.27	3.69	18.93	3.76
							12	15.47	3.49	16.09	3.56	16.72	3.63	17.03	3.67	17.35	3.71	18.00	3.78	18.66	3.85
							14	15.20	3.58	15.82	3.65	16.45	3.73	16.76	3.76	17.09	3.80	17.73	3.87	18.39	3.95
							16	14.92	3.67	15.55	3.75	16.18	3.82	16.50	3.86	16.82	3.90	17.47	3.97	18.13	4.04
							18	14.65	3.77	15.28	3.84	15.91	3.92	16.23	3.96	16.55	3.99	17.20	4.07	17.86	4.14
							20	14.38	3.87	15.01	3.94	15.64	4.02	15.96	4.05	16.28	4.09	16.93	4.17	17.60	4.24
							21	14.25	3.92	14.87	3.99	15.51	4.07	15.83	4.10	16.15	4.14	16.80	4.22	17.46	4.29
							23	13.98	4.02	14.60	4.09	15.24	4.17	15.56	4.21	15.88	4.24	16.54	4.32	17.20	4.40
							25	13.71	4.12	14.34	4.20	14.97	4.27	15.29	4.31	15.62	4.35	16.27	4.42	16.94	4.50
							27	13.44	4.22	14.07	4.30	14.71	4.38	15.03	4.41	15.35	4.45	16.01	4.53	16.68	4.61
							29	13.17	4.33	13.80	4.41	14.44	4.48	14.76	4.52	15.09	4.56	15.75	4.64	16.41	4.71
							31	12.91	4.44	13.54	4.51	14.18	4.59	14.50	4.63	14.83	4.67	15.48	4.75	16.15	4.82
							33	12.64	4.54	13.27	4.62	13.91	4.70	14.24	4.74	14.56	4.78	15.22	4.86	15.89	4.93
							35	12.37	4.65	13.01	4.73	13.65	4.81	14.00	4.84	14.30	4.89	14.96	4.97	15.63	5.05
							37	12.11	4.77	12.74	4.85	13.39	4.92	13.71	4.96	14.04	5.00	14.70	5.08	15.37	5.16
							39	11.85	4.88	12.48	4.96	13.13	5.04	13.45	5.08	13.78	5.12	14.44	5.20	15.12	5.28
							42	11.45	5.05	12.09	5.13	12.73	5.21	13.06	5.25	13.39	5.29	14.06	5.37	14.73	5.45
							44	11.19	5.17	11.83	5.25	12.47	5.33	12.80	5.37	13.13	5.41	13.80	5.49	14.47	5.58
							46	10.93	5.29	11.57	5.37	12.22	5.45	12.54	5.49	12.87	5.53	13.54	5.62	14.22	5.70

12. Capacity Table

12-7. AJ140TXJ5KH/EA

COOLING

Combination (Capacity Index)					Combination (Total)	Combination (%)	Outdoor Temperature (°C,DB)	Indoor Temperature(°C, WB)													
								14		16		18		19		20		22		24	
								TC(kW)	PI(kW)	TC(kW)	PI(kW)	TC(kW)	PI(kW)	TC(kW)	PI(kW)	TC(kW)	PI(kW)	TC(kW)	PI(kW)	TC(kW)	PI(kW)
3500	3500	3500	3500		14000	100%	10	13.61	2.74	14.14	2.80	14.68	2.86	14.96	2.89	15.23	2.92	15.79	2.98	16.36	3.04
							12	13.37	2.82	13.90	2.88	14.45	2.93	14.72	2.96	15.00	2.99	15.56	3.05	16.13	3.11
							14	13.13	2.89	13.67	2.95	14.21	3.01	14.49	3.04	14.77	3.07	15.33	3.13	15.90	3.19
							16	12.90	2.97	13.44	3.03	13.98	3.09	14.26	3.12	14.53	3.15	15.10	3.21	15.67	3.27
							18	12.66	3.05	13.20	3.11	13.75	3.17	14.03	3.20	14.30	3.23	14.87	3.29	15.44	3.35
							20	12.43	3.12	12.97	3.18	13.52	3.25	13.79	3.28	14.07	3.31	14.64	3.37	15.21	3.43
							21	12.31	3.16	12.85	3.22	13.40	3.29	13.68	3.32	13.96	3.35	14.52	3.41	15.09	3.47
							23	12.08	3.25	12.62	3.31	13.17	3.37	13.45	3.40	13.73	3.43	14.29	3.49	14.87	3.55
							25	11.85	3.33	12.39	3.39	12.94	3.45	13.22	3.48	13.50	3.51	14.06	3.57	14.64	3.63
							27	11.62	3.41	12.16	3.47	12.71	3.54	12.99	3.57	13.27	3.60	13.84	3.66	14.41	3.72
							29	11.39	3.50	11.93	3.56	12.48	3.62	12.76	3.65	13.04	3.68	13.61	3.75	14.19	3.81
							31	11.15	3.58	11.70	3.65	12.25	3.71	12.53	3.74	12.81	3.77	13.38	3.83	13.96	3.90
							33	10.92	3.67	11.47	3.73	12.02	3.80	12.30	3.83	12.59	3.86	13.16	3.92	13.74	3.99
							35	10.70	3.76	11.24	3.82	11.80	3.89	12.10	3.91	12.36	3.95	12.93	4.01	13.51	4.08
							37	10.47	3.85	11.01	3.91	11.57	3.98	11.85	4.01	12.14	4.04	12.71	4.11	13.29	4.17
							39	10.24	3.94	10.79	4.01	11.34	4.07	11.63	4.10	11.91	4.13	12.48	4.20	13.06	4.26
							42	9.90	4.08	10.45	4.15	11.01	4.21	11.29	4.24	11.57	4.28	12.15	4.34	12.73	4.41
							44	9.67	4.18	10.22	4.24	10.78	4.31	11.06	4.34	11.35	4.37	11.93	4.44	12.51	4.50
							46	9.44	4.27	10.00	4.34	10.56	4.41	10.84	4.44	11.13	4.47	11.70	4.54	12.29	4.60
3500	3500	3500	5000		15500	111%	10	15.26	3.32	15.86	3.39	16.47	3.46	16.77	3.50	17.08	3.53	17.71	3.60	18.34	3.67
							12	14.99	3.41	15.59	3.48	16.20	3.55	16.51	3.59	16.82	3.62	17.45	3.69	18.09	3.76
							14	14.73	3.50	15.33	3.57	15.94	3.64	16.25	3.68	16.56	3.71	17.19	3.78	17.83	3.86
							16	14.47	3.59	15.07	3.66	15.68	3.73	15.99	3.77	16.30	3.81	16.93	3.88	17.57	3.95
							18	14.20	3.68	14.81	3.76	15.42	3.83	15.73	3.87	16.04	3.90	16.67	3.97	17.31	4.05
							20	13.94	3.78	14.55	3.85	15.16	3.93	15.47	3.96	15.78	4.00	16.41	4.07	17.06	4.15
							21	13.81	3.83	14.41	3.90	15.03	3.97	15.34	4.01	15.65	4.05	16.29	4.12	16.93	4.19
							23	13.55	3.93	14.15	4.00	14.77	4.07	15.08	4.11	15.40	4.15	16.03	4.22	16.67	4.30
							25	13.29	4.03	13.90	4.10	14.51	4.17	14.82	4.21	15.14	4.25	15.77	4.32	16.42	4.40
							27	13.03	4.13	13.64	4.20	14.25	4.28	14.57	4.31	14.88	4.35	15.52	4.43	16.16	4.50
							29	12.77	4.23	13.38	4.31	14.00	4.38	14.31	4.42	14.63	4.46	15.26	4.53	15.91	4.61
							31	12.51	4.33	13.12	4.41	13.74	4.49	14.05	4.52	14.37	4.56	15.01	4.64	15.66	4.71
							33	12.25	4.44	12.86	4.52	13.49	4.59	13.80	4.63	14.12	4.67	14.76	4.75	15.40	4.82
							35	11.99	4.55	12.61	4.63	13.23	4.70	13.57	4.73	13.86	4.78	14.50	4.86	15.15	4.93
							37	11.74	4.66	12.35	4.74	12.98	4.81	13.29	4.85	13.61	4.89	14.25	4.97	14.90	5.04
							39	11.48	4.77	12.10	4.85	12.72	4.92	13.04	4.96	13.36	5.00	14.00	5.08	14.65	5.16
							42	11.10	4.94	11.72	5.02	12.34	5.10	12.66	5.13	12.98	5.17	13.62	5.25	14.28	5.33
							44	10.84	5.05	11.46	5.13	12.09	5.21	12.41	5.25	12.73	5.29	13.37	5.37	14.03	5.45
							46	10.59	5.17	11.21	5.25	11.84	5.33	12.16	5.37	12.48	5.41	13.13	5.49	13.78	5.57

12. Capacity Table

12-7. AJ140TXJ5KH/EA

COOLING

Combination (Capacity Index)					Combination (Total)	Combination (%)	Outdoor Temperature (°C,DB)	Indoor Temperature(°C, WB)													
								14		16		18		19		20		22		24	
								TC(kW)	PI(kW)	TC(kW)	PI(kW)	TC(kW)	PI(kW)	TC(kW)	PI(kW)	TC(kW)	PI(kW)	TC(kW)	PI(kW)	TC(kW)	PI(kW)
3500	3500	3500	6800		17300	124%	10	15.74	3.40	16.36	3.47	16.99	3.54	17.30	3.58	17.62	3.61	18.27	3.69	18.93	3.76
							12	15.47	3.49	16.09	3.56	16.72	3.63	17.03	3.67	17.35	3.71	18.00	3.78	18.66	3.85
							14	15.20	3.58	15.82	3.65	16.45	3.73	16.76	3.76	17.09	3.80	17.73	3.87	18.39	3.95
							16	14.92	3.67	15.55	3.75	16.18	3.82	16.50	3.86	16.82	3.90	17.47	3.97	18.13	4.04
							18	14.65	3.77	15.28	3.84	15.91	3.92	16.23	3.96	16.55	3.99	17.20	4.07	17.86	4.14
							20	14.38	3.87	15.01	3.94	15.64	4.02	15.96	4.05	16.28	4.09	16.93	4.17	17.60	4.24
							21	14.25	3.92	14.87	3.99	15.51	4.07	15.83	4.10	16.15	4.14	16.80	4.22	17.46	4.29
							23	13.98	4.02	14.60	4.09	15.24	4.17	15.56	4.21	15.88	4.24	16.54	4.32	17.20	4.40
							25	13.71	4.12	14.34	4.20	14.97	4.27	15.29	4.31	15.62	4.35	16.27	4.42	16.94	4.50
							27	13.44	4.22	14.07	4.30	14.71	4.38	15.03	4.41	15.35	4.45	16.01	4.53	16.68	4.61
							29	13.17	4.33	13.80	4.41	14.44	4.48	14.76	4.52	15.09	4.56	15.75	4.64	16.41	4.71
							31	12.91	4.44	13.54	4.51	14.18	4.59	14.50	4.63	14.83	4.67	15.48	4.75	16.15	4.82
							33	12.64	4.54	13.27	4.62	13.91	4.70	14.24	4.74	14.56	4.78	15.22	4.86	15.89	4.93
							35	12.37	4.65	13.01	4.73	13.65	4.81	14.00	4.84	14.30	4.89	14.96	4.97	15.63	5.05
							37	12.11	4.77	12.74	4.85	13.39	4.92	13.71	4.96	14.04	5.00	14.70	5.08	15.37	5.16
							39	11.85	4.88	12.48	4.96	13.13	5.04	13.45	5.08	13.78	5.12	14.44	5.20	15.12	5.28
							42	11.45	5.05	12.09	5.13	12.73	5.21	13.06	5.25	13.39	5.29	14.06	5.37	14.73	5.45
							44	11.19	5.17	11.83	5.25	12.47	5.33	12.80	5.37	13.13	5.41	13.80	5.49	14.47	5.58
							46	10.93	5.29	11.57	5.37	12.22	5.45	12.54	5.49	12.87	5.53	13.54	5.62	14.22	5.70
3500	3500	5000	5000		17000	121%	10	15.74	3.40	16.36	3.47	16.99	3.54	17.30	3.58	17.62	3.61	18.27	3.69	18.93	3.76
							12	15.47	3.49	16.09	3.56	16.72	3.63	17.03	3.67	17.35	3.71	18.00	3.78	18.66	3.85
							14	15.20	3.58	15.82	3.65	16.45	3.73	16.76	3.76	17.09	3.80	17.73	3.87	18.39	3.95
							16	14.92	3.67	15.55	3.75	16.18	3.82	16.50	3.86	16.82	3.90	17.47	3.97	18.13	4.04
							18	14.65	3.77	15.28	3.84	15.91	3.92	16.23	3.96	16.55	3.99	17.20	4.07	17.86	4.14
							20	14.38	3.87	15.01	3.94	15.64	4.02	15.96	4.05	16.28	4.09	16.93	4.17	17.60	4.24
							21	14.25	3.92	14.87	3.99	15.51	4.07	15.83	4.10	16.15	4.14	16.80	4.22	17.46	4.29
							23	13.98	4.02	14.60	4.09	15.24	4.17	15.56	4.21	15.88	4.24	16.54	4.32	17.20	4.40
							25	13.71	4.12	14.34	4.20	14.97	4.27	15.29	4.31	15.62	4.35	16.27	4.42	16.94	4.50
							27	13.44	4.22	14.07	4.30	14.71	4.38	15.03	4.41	15.35	4.45	16.01	4.53	16.68	4.61
							29	13.17	4.33	13.80	4.41	14.44	4.48	14.76	4.52	15.09	4.56	15.75	4.64	16.41	4.71
							31	12.91	4.44	13.54	4.51	14.18	4.59	14.50	4.63	14.83	4.67	15.48	4.75	16.15	4.82
							33	12.64	4.54	13.27	4.62	13.91	4.70	14.24	4.74	14.56	4.78	15.22	4.86	15.89	4.93
							35	12.37	4.65	13.01	4.73	13.65	4.81	14.00	4.84	14.30	4.89	14.96	4.97	15.63	5.05
							37	12.11	4.77	12.74	4.85	13.39	4.92	13.71	4.96	14.04	5.00	14.70	5.08	15.37	5.16
							39	11.85	4.88	12.48	4.96	13.13	5.04	13.45	5.08	13.78	5.12	14.44	5.20	15.12	5.28
							42	11.45	5.05	12.09	5.13	12.73	5.21	13.06	5.25	13.39	5.29	14.06	5.37	14.73	5.45
							44	11.19	5.17	11.83	5.25	12.47	5.33	12.80	5.37	13.13	5.41	13.80	5.49	14.47	5.58
							46	10.93	5.29	11.57	5.37	12.22	5.45	12.54	5.49	12.87	5.53	13.54	5.62	14.22	5.70

12. Capacity Table

12-7. AJ140TXJ5KH/EA

COOLING

Combination (Capacity Index)					Combination (Total)	Combination (%)	Outdoor Temperature (°C,DB)	Indoor Temperature(°C, WB)													
								14		16		18		19		20		22		24	
								TC(kW)	PI(kW)	TC(kW)	PI(kW)	TC(kW)	PI(kW)	TC(kW)	PI(kW)	TC(kW)	PI(kW)	TC(kW)	PI(kW)	TC(kW)	PI(kW)
2000	2000	2000	2000	2000	10000	71%	10	9.07	2.34	12.79	2.40	13.03	2.46	13.18	2.48	13.34	2.51	13.71	2.56	14.15	2.62
							12	9.07	2.40	12.44	2.46	12.70	2.51	12.86	2.54	13.03	2.57	13.42	2.62	13.87	2.67
							14	9.07	2.46	12.11	2.52	12.39	2.57	12.55	2.60	12.73	2.63	13.14	2.68	13.61	2.73
							16	9.07	2.52	11.79	2.58	12.08	2.64	12.26	2.66	12.44	2.69	12.87	2.74	13.36	2.79
							18	9.07	2.58	11.48	2.64	11.80	2.70	11.98	2.73	12.18	2.75	12.62	2.81	13.13	2.86
							20	9.07	2.65	11.19	2.71	11.52	2.76	11.71	2.79	11.92	2.82	12.38	2.87	12.91	2.92
							21	9.07	2.68	11.05	2.74	11.39	2.80	11.59	2.83	11.80	2.85	12.27	2.90	12.80	2.95
							23	9.07	2.75	10.78	2.81	11.14	2.87	11.34	2.89	11.56	2.92	12.05	2.97	12.60	3.02
							25	9.07	2.82	10.53	2.88	10.90	2.94	11.11	2.96	11.34	2.99	11.85	3.04	12.42	3.09
							27	9.07	2.90	10.29	2.95	10.68	3.01	10.90	3.03	11.14	3.06	11.66	3.11	12.25	3.16
							29	9.07	2.97	10.06	3.03	10.47	3.08	10.70	3.11	10.95	3.13	11.49	3.19	12.09	3.23
							31	9.07	3.04	9.85	3.10	10.28	3.16	10.51	3.18	10.77	3.21	11.33	3.26	11.95	3.31
							33	9.07	3.12	9.65	3.18	10.09	3.23	10.34	3.26	10.61	3.29	11.18	3.34	11.82	3.38
							35	9.07	3.20	9.47	3.26	9.93	3.31	10.26	3.33	10.46	3.36	11.05	3.41	11.71	3.46
							37	9.07	3.28	9.30	3.34	9.78	3.39	10.04	3.42	10.32	3.44	10.94	3.49	11.61	3.54
							39	9.07	3.36	9.14	3.42	9.64	3.47	9.91	3.50	10.20	3.53	10.83	3.58	11.53	3.62
							42	9.07	3.49	8.93	3.55	9.46	3.60	9.75	3.63	10.05	3.65	10.71	3.70	11.43	3.75
							44	9.07	3.58	8.81	3.63	9.36	3.69	9.65	3.71	9.97	3.74	10.64	3.79	11.38	3.84
							46	9.07	3.67	8.71	3.72	9.27	3.78	9.57	3.80	9.90	3.83	10.59	3.88	11.34	3.92
2000	2000	2000	2000	2500	10500	75%	10	9.58	2.85	13.51	2.92	13.77	2.99	13.92	3.03	14.09	3.06	14.49	3.13	14.95	3.19
							12	9.58	2.92	13.15	3.00	13.42	3.07	13.58	3.10	13.76	3.13	14.18	3.20	14.66	3.26
							14	9.58	3.00	12.79	3.07	13.09	3.14	13.26	3.17	13.45	3.21	13.88	3.27	14.38	3.33
							16	9.58	3.07	12.46	3.14	12.77	3.21	12.95	3.25	13.15	3.28	13.60	3.34	14.12	3.41
							18	9.58	3.15	12.13	3.22	12.46	3.29	12.65	3.32	12.86	3.36	13.33	3.42	13.87	3.48
							20	9.58	3.23	11.83	3.30	12.17	3.37	12.38	3.40	12.59	3.44	13.08	3.50	13.64	3.56
							21	9.58	3.27	11.68	3.34	12.04	3.41	12.24	3.44	12.46	3.48	12.96	3.54	13.53	3.60
							23	9.58	3.36	11.39	3.43	11.77	3.49	11.98	3.53	12.22	3.56	12.73	3.62	13.32	3.68
							25	9.58	3.44	11.12	3.51	11.52	3.58	11.74	3.61	11.98	3.65	12.52	3.71	13.12	3.77
							27	9.58	3.53	10.87	3.60	11.28	3.67	11.52	3.70	11.77	3.73	12.32	3.79	12.94	3.85
							29	9.58	3.62	10.63	3.69	11.06	3.76	11.30	3.79	11.56	3.82	12.14	3.88	12.78	3.94
							31	9.58	3.71	10.40	3.78	10.86	3.85	11.11	3.88	11.38	3.91	11.97	3.97	12.63	4.03
							33	9.58	3.81	10.19	3.88	10.67	3.94	10.93	3.97	11.21	4.01	11.81	4.07	12.49	4.13
							35	9.58	3.90	10.00	3.97	10.49	4.04	10.84	4.06	11.05	4.10	11.68	4.16	12.37	4.22
							37	9.58	4.00	9.82	4.07	10.33	4.14	10.61	4.17	10.91	4.20	11.55	4.26	12.27	4.32
							39	9.58	4.10	9.66	4.17	10.18	4.24	10.47	4.27	10.78	4.30	11.45	4.36	12.18	4.42
							42	9.58	4.26	9.44	4.32	9.99	4.39	10.30	4.42	10.62	4.45	11.31	4.51	12.07	4.57
							44	9.58	4.36	9.31	4.43	9.89	4.50	10.20	4.53	10.53	4.56	11.24	4.62	12.02	4.68
							46	9.58	4.47	9.20	4.54	9.79	4.60	10.11	4.64	10.45	4.67	11.19	4.73	11.99	4.78

12. Capacity Table

12-7. AJ140TXJ5KH/EA

COOLING

Combination (Capacity Index)					Combination (Total)	Combination (%)	Outdoor Temperature (°C,DB)	Indoor Temperature(°C, WB)													
								14		16		18		19		20		22		24	
								TC(kW)	PI(kW)	TC(kW)	PI(kW)	TC(kW)	PI(kW)	TC(kW)	PI(kW)	TC(kW)	PI(kW)	TC(kW)	PI(kW)	TC(kW)	PI(kW)
2000	2000	2000	2000	3500	11500	82%	10	10.36	2.89	14.61	2.96	14.89	3.03	15.05	3.07	15.24	3.10	15.66	3.16	16.17	3.23
							12	10.36	2.96	14.21	3.03	14.51	3.10	14.69	3.14	14.88	3.17	15.33	3.24	15.85	3.30
							14	10.36	3.03	13.83	3.11	14.15	3.18	14.34	3.21	14.54	3.24	15.01	3.31	15.55	3.37
							16	10.36	3.11	13.47	3.18	13.80	3.25	14.00	3.29	14.22	3.32	14.70	3.39	15.26	3.45
							18	10.36	3.19	13.12	3.26	13.48	3.33	13.68	3.37	13.91	3.40	14.41	3.46	15.00	3.53
							20	10.36	3.27	12.79	3.34	13.16	3.41	13.38	3.45	13.62	3.48	14.14	3.54	14.75	3.61
							21	10.36	3.31	12.63	3.38	13.01	3.45	13.24	3.49	13.48	3.52	14.01	3.58	14.63	3.65
							23	10.36	3.40	12.32	3.47	12.73	3.54	12.96	3.57	13.21	3.60	13.77	3.67	14.40	3.73
							25	10.36	3.48	12.03	3.56	12.45	3.62	12.70	3.66	12.96	3.69	13.54	3.75	14.19	3.81
							27	10.36	3.57	11.75	3.64	12.20	3.71	12.45	3.75	12.72	3.78	13.32	3.84	13.99	3.90
							29	10.36	3.66	11.49	3.73	11.96	3.80	12.22	3.84	12.50	3.87	13.12	3.93	13.82	3.99
							31	10.36	3.76	11.25	3.83	11.74	3.90	12.01	3.93	12.30	3.96	12.94	4.02	13.65	4.08
							33	10.36	3.85	11.02	3.92	11.53	3.99	11.81	4.02	12.12	4.06	12.77	4.12	13.51	4.18
							35	10.36	3.95	10.81	4.02	11.34	4.09	11.72	4.11	11.95	4.15	12.62	4.21	13.38	4.27
							37	10.36	4.05	10.62	4.12	11.17	4.19	11.47	4.22	11.79	4.25	12.49	4.31	13.27	4.37
							39	10.36	4.15	10.44	4.22	11.01	4.29	11.32	4.32	11.65	4.35	12.37	4.41	13.17	4.47
							42	10.36	4.31	10.20	4.38	10.80	4.44	11.13	4.48	11.48	4.51	12.23	4.57	13.05	4.63
							44	10.36	4.42	10.07	4.49	10.69	4.55	11.03	4.58	11.38	4.61	12.15	4.68	13.00	4.73
							46	10.36	4.53	9.95	4.59	10.59	4.66	10.94	4.69	11.30	4.72	12.09	4.78	12.96	4.84
2000	2000	2000	2000	5000	13000	93%	10	11.05	2.78	15.58	2.85	15.88	2.91	16.06	2.95	16.25	2.98	16.71	3.04	17.24	3.10
							12	11.05	2.84	15.16	2.91	15.48	2.98	15.66	3.02	15.87	3.05	16.35	3.11	16.90	3.17
							14	11.05	2.92	14.75	2.99	15.09	3.05	15.29	3.09	15.51	3.12	16.01	3.18	16.58	3.24
							16	11.05	2.99	14.36	3.06	14.72	3.13	14.93	3.16	15.16	3.19	15.68	3.25	16.28	3.31
							18	11.05	3.07	13.99	3.14	14.37	3.20	14.59	3.23	14.83	3.27	15.37	3.33	15.99	3.39
							20	11.05	3.14	13.64	3.21	14.04	3.28	14.27	3.31	14.52	3.34	15.08	3.41	15.73	3.47
							21	11.05	3.18	13.47	3.25	13.88	3.32	14.12	3.35	14.37	3.38	14.95	3.45	15.60	3.50
							23	11.05	3.27	13.14	3.33	13.57	3.40	13.82	3.43	14.09	3.46	14.68	3.53	15.36	3.58
							25	11.05	3.35	12.83	3.42	13.28	3.48	13.54	3.51	13.82	3.55	14.44	3.61	15.13	3.67
							27	11.05	3.43	12.53	3.50	13.01	3.57	13.28	3.60	13.57	3.63	14.21	3.69	14.92	3.75
							29	11.05	3.52	12.26	3.59	12.76	3.65	13.04	3.69	13.34	3.72	14.00	3.78	14.73	3.84
							31	11.05	3.61	12.00	3.68	12.52	3.74	12.81	3.78	13.12	3.81	13.80	3.87	14.56	3.92
							33	11.05	3.70	11.76	3.77	12.30	3.83	12.60	3.87	12.92	3.90	13.62	3.96	14.41	4.02
							35	11.05	3.80	11.53	3.86	12.10	3.93	12.50	3.95	12.74	3.99	13.46	4.05	14.27	4.11
							37	11.05	3.89	11.32	3.96	11.91	4.02	12.23	4.05	12.58	4.09	13.32	4.15	14.15	4.20
							39	11.05	3.99	11.14	4.06	11.74	4.12	12.08	4.15	12.43	4.18	13.20	4.24	14.05	4.30
							42	11.05	4.14	10.88	4.21	11.52	4.27	11.87	4.30	12.24	4.33	13.04	4.39	13.92	4.45
							44	11.05	4.24	10.74	4.31	11.40	4.37	11.76	4.40	12.14	4.43	12.96	4.49	13.86	4.55
							46	11.05	4.35	10.61	4.42	11.29	4.48	11.66	4.51	12.06	4.54	12.90	4.60	13.82	4.65

12. Capacity Table

12-7. AJ140TXJ5KH/EA

COOLING

Combination (Capacity Index)					Combination (Total)	Combination (%)	Outdoor Temperature (°C,DB)	Indoor Temperature(°C, WB)													
								14		16		18		19		20		22		24	
								TC(kW)	PI(kW)	TC(kW)	PI(kW)	TC(kW)	PI(kW)	TC(kW)	PI(kW)	TC(kW)	PI(kW)	TC(kW)	PI(kW)	TC(kW)	PI(kW)
2000	2000	2000	2000	6800	14800	106%	10	15.74	3.40	16.36	3.47	16.99	3.54	17.30	3.58	17.62	3.61	18.27	3.69	18.93	3.76
							12	15.47	3.49	16.09	3.56	16.72	3.63	17.03	3.67	17.35	3.71	18.00	3.78	18.66	3.85
							14	15.20	3.58	15.82	3.65	16.45	3.73	16.76	3.76	17.09	3.80	17.73	3.87	18.39	3.95
							16	14.92	3.67	15.55	3.75	16.18	3.82	16.50	3.86	16.82	3.90	17.47	3.97	18.13	4.04
							18	14.65	3.77	15.28	3.84	15.91	3.92	16.23	3.96	16.55	3.99	17.20	4.07	17.86	4.14
							20	14.38	3.87	15.01	3.94	15.64	4.02	15.96	4.05	16.28	4.09	16.93	4.17	17.60	4.24
							21	14.25	3.92	14.87	3.99	15.51	4.07	15.83	4.10	16.15	4.14	16.80	4.22	17.46	4.29
							23	13.98	4.02	14.60	4.09	15.24	4.17	15.56	4.21	15.88	4.24	16.54	4.32	17.20	4.40
							25	13.71	4.12	14.34	4.20	14.97	4.27	15.29	4.31	15.62	4.35	16.27	4.42	16.94	4.50
							27	13.44	4.22	14.07	4.30	14.71	4.38	15.03	4.41	15.35	4.45	16.01	4.53	16.68	4.61
							29	13.17	4.33	13.80	4.41	14.44	4.48	14.76	4.52	15.09	4.56	15.75	4.64	16.41	4.71
							31	12.91	4.44	13.54	4.51	14.18	4.59	14.50	4.63	14.83	4.67	15.48	4.75	16.15	4.82
							33	12.64	4.54	13.27	4.62	13.91	4.70	14.24	4.74	14.56	4.78	15.22	4.86	15.89	4.93
							35	12.37	4.65	13.01	4.73	13.65	4.81	14.00	4.84	14.30	4.89	14.96	4.97	15.63	5.05
							37	12.11	4.77	12.74	4.85	13.39	4.92	13.71	4.96	14.04	5.00	14.70	5.08	15.37	5.16
							39	11.85	4.88	12.48	4.96	13.13	5.04	13.45	5.08	13.78	5.12	14.44	5.20	15.12	5.28
							42	11.45	5.05	12.09	5.13	12.73	5.21	13.06	5.25	13.39	5.29	14.06	5.37	14.73	5.45
							44	11.19	5.17	11.83	5.25	12.47	5.33	12.80	5.37	13.13	5.41	13.80	5.49	14.47	5.58
							46	10.93	5.29	11.57	5.37	12.22	5.45	12.54	5.49	12.87	5.53	13.54	5.62	14.22	5.70
2000	2000	2000	2500	2500	11000	79%	10	10.10	2.87	14.25	2.95	14.52	3.02	14.68	3.05	14.86	3.08	15.28	3.15	15.77	3.21
							12	10.10	2.95	13.86	3.02	14.15	3.09	14.32	3.12	14.51	3.16	14.95	3.22	15.46	3.28
							14	10.10	3.02	13.49	3.09	13.80	3.16	13.98	3.20	14.18	3.23	14.64	3.29	15.16	3.36
							16	10.10	3.10	13.13	3.17	13.46	3.24	13.65	3.27	13.86	3.30	14.34	3.37	14.89	3.43
							18	10.10	3.17	12.79	3.25	13.14	3.32	13.34	3.35	13.56	3.38	14.06	3.45	14.63	3.51
							20	10.10	3.26	12.47	3.33	12.84	3.40	13.05	3.43	13.28	3.46	13.79	3.53	14.38	3.59
							21	10.10	3.30	12.31	3.37	12.69	3.44	12.91	3.47	13.14	3.50	13.67	3.57	14.26	3.63
							23	10.10	3.38	12.01	3.45	12.41	3.52	12.64	3.55	12.88	3.59	13.43	3.65	14.04	3.71
							25	10.10	3.47	11.73	3.54	12.15	3.61	12.38	3.64	12.64	3.67	13.20	3.74	13.84	3.80
							27	10.10	3.56	11.46	3.63	11.90	3.69	12.14	3.73	12.41	3.76	12.99	3.82	13.65	3.88
							29	10.10	3.65	11.21	3.72	11.66	3.78	11.92	3.82	12.19	3.85	12.80	3.91	13.47	3.97
							31	10.10	3.74	10.97	3.81	11.45	3.88	11.71	3.91	12.00	3.94	12.62	4.00	13.32	4.06
							33	10.10	3.83	10.75	3.90	11.25	3.97	11.52	4.00	11.82	4.04	12.46	4.10	13.17	4.16
							35	10.10	3.93	10.54	4.00	11.06	4.07	11.43	4.09	11.65	4.13	12.31	4.19	13.05	4.25
							37	10.10	4.03	10.36	4.10	10.89	4.17	11.19	4.20	11.50	4.23	12.18	4.29	12.94	4.35
							39	10.10	4.13	10.18	4.20	10.74	4.27	11.04	4.30	11.37	4.33	12.07	4.39	12.84	4.45
							42	10.10	4.29	9.95	4.36	10.54	4.42	10.86	4.45	11.20	4.49	11.93	4.55	12.73	4.61
							44	10.10	4.40	9.82	4.46	10.42	4.53	10.75	4.56	11.10	4.59	11.85	4.65	12.68	4.71
							46	10.10	4.50	9.70	4.57	10.33	4.64	10.67	4.67	11.02	4.70	11.79	4.76	12.64	4.82

12. Capacity Table

12-7. AJ140TXJ5KH/EA

COOLING

Combination (Capacity Index)					Combination (Total)	Combination (%)	Outdoor Temperature (°C,DB)	Indoor Temperature(°C, WB)													
								14		16		18		19		20		22		24	
								TC(kW)	PI(kW)	TC(kW)	PI(kW)	TC(kW)	PI(kW)	TC(kW)	PI(kW)	TC(kW)	PI(kW)	TC(kW)	PI(kW)	TC(kW)	PI(kW)
2000	2000	2000	2500	3500	12000	86%	10	10.88	2.91	15.35	2.98	15.64	3.05	15.81	3.09	16.01	3.12	16.45	3.19	16.98	3.25
							12	10.88	2.98	14.93	3.05	15.24	3.13	15.43	3.16	15.63	3.19	16.10	3.26	16.65	3.32
							14	10.88	3.06	14.53	3.13	14.86	3.20	15.06	3.23	15.27	3.27	15.76	3.33	16.33	3.40
							16	10.88	3.13	14.14	3.21	14.50	3.28	14.71	3.31	14.93	3.35	15.44	3.41	16.03	3.47
							18	10.88	3.21	13.78	3.29	14.15	3.36	14.37	3.39	14.61	3.42	15.14	3.49	15.75	3.55
							20	10.88	3.30	13.43	3.37	13.83	3.44	14.05	3.47	14.30	3.50	14.85	3.57	15.49	3.63
							21	10.88	3.34	13.26	3.41	13.67	3.48	13.90	3.51	14.15	3.55	14.72	3.61	15.36	3.67
							23	10.88	3.42	12.94	3.49	13.37	3.56	13.61	3.60	13.87	3.63	14.46	3.69	15.12	3.76
							25	10.88	3.51	12.63	3.58	13.08	3.65	13.34	3.68	13.61	3.72	14.22	3.78	14.90	3.84
							27	10.88	3.60	12.34	3.67	12.81	3.74	13.08	3.77	13.36	3.81	13.99	3.87	14.70	3.93
							29	10.88	3.69	12.07	3.76	12.56	3.83	12.84	3.86	13.13	3.90	13.78	3.96	14.51	4.02
							31	10.88	3.78	11.81	3.86	12.33	3.92	12.61	3.96	12.92	3.99	13.59	4.05	14.34	4.11
							33	10.88	3.88	11.58	3.95	12.11	4.02	12.41	4.05	12.73	4.08	13.42	4.15	14.19	4.21
							35	10.88	3.98	11.36	4.05	11.91	4.12	12.31	4.14	12.55	4.18	13.26	4.25	14.05	4.31
							37	10.88	4.08	11.15	4.15	11.73	4.22	12.05	4.25	12.39	4.28	13.12	4.34	13.93	4.40
							39	10.88	4.18	10.97	4.25	11.56	4.32	11.89	4.35	12.24	4.38	13.00	4.45	13.83	4.51
							42	10.88	4.34	10.72	4.41	11.35	4.48	11.69	4.51	12.06	4.54	12.85	4.60	13.71	4.66
							44	10.88	4.45	10.57	4.52	11.23	4.58	11.58	4.62	11.96	4.65	12.77	4.71	13.65	4.77
							46	10.88	4.56	10.45	4.63	11.12	4.69	11.49	4.73	11.87	4.76	12.70	4.82	13.61	4.88
2000	2000	2000	2500	5000	13500	96%	10	15.18	3.11	15.78	3.17	16.38	3.24	16.69	3.27	16.99	3.31	17.62	3.37	18.25	3.44
							12	14.92	3.19	15.51	3.26	16.12	3.32	16.43	3.36	16.73	3.39	17.36	3.46	17.99	3.53
							14	14.65	3.28	15.25	3.34	15.86	3.41	16.17	3.44	16.48	3.48	17.10	3.54	17.74	3.61
							16	14.39	3.36	14.99	3.43	15.60	3.50	15.91	3.53	16.22	3.57	16.84	3.63	17.48	3.70
							18	14.13	3.45	14.73	3.52	15.34	3.59	15.65	3.62	15.96	3.65	16.59	3.72	17.22	3.79
							20	13.87	3.54	14.47	3.61	15.08	3.68	15.39	3.71	15.70	3.75	16.33	3.81	16.97	3.88
							21	13.74	3.59	14.34	3.65	14.95	3.72	15.26	3.76	15.57	3.79	16.20	3.86	16.84	3.93
							23	13.48	3.68	14.08	3.75	14.69	3.82	15.00	3.85	15.32	3.88	15.95	3.95	16.59	4.02
							25	13.22	3.77	13.82	3.84	14.44	3.91	14.75	3.94	15.06	3.98	15.69	4.05	16.33	4.12
							27	12.96	3.87	13.57	3.94	14.18	4.01	14.49	4.04	14.80	4.08	15.44	4.15	16.08	4.22
							29	12.70	3.96	13.31	4.03	13.93	4.10	14.24	4.14	14.55	4.17	15.18	4.24	15.83	4.31
							31	12.45	4.06	13.05	4.13	13.67	4.20	13.98	4.24	14.30	4.27	14.93	4.34	15.58	4.41
							33	12.19	4.16	12.80	4.23	13.42	4.30	13.73	4.34	14.04	4.37	14.68	4.44	15.33	4.52
							35	11.93	4.26	12.54	4.33	13.16	4.40	13.50	4.43	13.79	4.48	14.43	4.55	15.07	4.62
							37	11.68	4.36	12.29	4.43	12.91	4.51	13.22	4.54	13.54	4.58	14.18	4.65	14.83	4.72
							39	11.42	4.47	12.04	4.54	12.66	4.61	12.97	4.65	13.29	4.68	13.93	4.76	14.58	4.83
							42	11.04	4.63	11.66	4.70	12.28	4.77	12.60	4.81	12.91	4.85	13.55	4.92	14.20	4.99
							44	10.79	4.73	11.40	4.81	12.03	4.88	12.34	4.92	12.66	4.96	13.31	5.03	13.96	5.10
							46	10.54	4.84	11.15	4.92	11.78	4.99	12.10	5.03	12.41	5.07	13.06	5.14	13.71	5.21

12. Capacity Table

12-7. AJ140TXJ5KH/EA

COOLING

Combination (Capacity Index)					Combination (Total)	Combination (%)	Outdoor Temperature (°C,DB)	Indoor Temperature(°C, WB)													
								14		16		18		19		20		22		24	
								TC(kW)	PI(kW)	TC(kW)	PI(kW)	TC(kW)	PI(kW)	TC(kW)	PI(kW)	TC(kW)	PI(kW)	TC(kW)	PI(kW)	TC(kW)	PI(kW)
2000	2000	2000	2500	6800	15300	109%	10	15.74	3.40	16.36	3.47	16.99	3.54	17.30	3.58	17.62	3.61	18.27	3.69	18.93	3.76
							12	15.47	3.49	16.09	3.56	16.72	3.63	17.03	3.67	17.35	3.71	18.00	3.78	18.66	3.85
							14	15.20	3.58	15.82	3.65	16.45	3.73	16.76	3.76	17.09	3.80	17.73	3.87	18.39	3.95
							16	14.92	3.67	15.55	3.75	16.18	3.82	16.50	3.86	16.82	3.90	17.47	3.97	18.13	4.04
							18	14.65	3.77	15.28	3.84	15.91	3.92	16.23	3.96	16.55	3.99	17.20	4.07	17.86	4.14
							20	14.38	3.87	15.01	3.94	15.64	4.02	15.96	4.05	16.28	4.09	16.93	4.17	17.60	4.24
							21	14.25	3.92	14.87	3.99	15.51	4.07	15.83	4.10	16.15	4.14	16.80	4.22	17.46	4.29
							23	13.98	4.02	14.60	4.09	15.24	4.17	15.56	4.21	15.88	4.24	16.54	4.32	17.20	4.40
							25	13.71	4.12	14.34	4.20	14.97	4.27	15.29	4.31	15.62	4.35	16.27	4.42	16.94	4.50
							27	13.44	4.22	14.07	4.30	14.71	4.38	15.03	4.41	15.35	4.45	16.01	4.53	16.68	4.61
							29	13.17	4.33	13.80	4.41	14.44	4.48	14.76	4.52	15.09	4.56	15.75	4.64	16.41	4.71
							31	12.91	4.44	13.54	4.51	14.18	4.59	14.50	4.63	14.83	4.67	15.48	4.75	16.15	4.82
							33	12.64	4.54	13.27	4.62	13.91	4.70	14.24	4.74	14.56	4.78	15.22	4.86	15.89	4.93
							35	12.37	4.65	13.01	4.73	13.65	4.81	14.00	4.84	14.30	4.89	14.96	4.97	15.63	5.05
							37	12.11	4.77	12.74	4.85	13.39	4.92	13.71	4.96	14.04	5.00	14.70	5.08	15.37	5.16
							39	11.85	4.88	12.48	4.96	13.13	5.04	13.45	5.08	13.78	5.12	14.44	5.20	15.12	5.28
							42	11.45	5.05	12.09	5.13	12.73	5.21	13.06	5.25	13.39	5.29	14.06	5.37	14.73	5.45
							44	11.19	5.17	11.83	5.25	12.47	5.33	12.80	5.37	13.13	5.41	13.80	5.49	14.47	5.58
							46	10.93	5.29	11.57	5.37	12.22	5.45	12.54	5.49	12.87	5.53	13.54	5.62	14.22	5.70
2000	2000	2000	3500	3500	13000	93%	10	11.05	2.78	15.58	2.85	15.88	2.91	16.06	2.95	16.25	2.98	16.71	3.04	17.24	3.10
							12	11.05	2.84	15.16	2.91	15.48	2.98	15.66	3.02	15.87	3.05	16.35	3.11	16.90	3.17
							14	11.05	2.92	14.75	2.99	15.09	3.05	15.29	3.09	15.51	3.12	16.01	3.18	16.58	3.24
							16	11.05	2.99	14.36	3.06	14.72	3.13	14.93	3.16	15.16	3.19	15.68	3.25	16.28	3.31
							18	11.05	3.07	13.99	3.14	14.37	3.20	14.59	3.23	14.83	3.27	15.37	3.33	15.99	3.39
							20	11.05	3.14	13.64	3.21	14.04	3.28	14.27	3.31	14.52	3.34	15.08	3.41	15.73	3.47
							21	11.05	3.18	13.47	3.25	13.88	3.32	14.12	3.35	14.37	3.38	14.95	3.45	15.60	3.50
							23	11.05	3.27	13.14	3.33	13.57	3.40	13.82	3.43	14.09	3.46	14.68	3.53	15.36	3.58
							25	11.05	3.35	12.83	3.42	13.28	3.48	13.54	3.51	13.82	3.55	14.44	3.61	15.13	3.67
							27	11.05	3.43	12.53	3.50	13.01	3.57	13.28	3.60	13.57	3.63	14.21	3.69	14.92	3.75
							29	11.05	3.52	12.26	3.59	12.76	3.65	13.04	3.69	13.34	3.72	14.00	3.78	14.73	3.84
							31	11.05	3.61	12.00	3.68	12.52	3.74	12.81	3.78	13.12	3.81	13.80	3.87	14.56	3.92
							33	11.05	3.70	11.76	3.77	12.30	3.83	12.60	3.87	12.92	3.90	13.62	3.96	14.41	4.02
							35	11.05	3.80	11.53	3.86	12.10	3.93	12.50	3.95	12.74	3.99	13.46	4.05	14.27	4.11
							37	11.05	3.89	11.32	3.96	11.91	4.02	12.23	4.05	12.58	4.09	13.32	4.15	14.15	4.20
							39	11.05	3.99	11.14	4.06	11.74	4.12	12.08	4.15	12.43	4.18	13.20	4.24	14.05	4.30
							42	11.05	4.14	10.88	4.21	11.52	4.27	11.87	4.30	12.24	4.33	13.04	4.39	13.92	4.45
							44	11.05	4.24	10.74	4.31	11.40	4.37	11.76	4.40	12.14	4.43	12.96	4.49	13.86	4.55
							46	11.05	4.35	10.61	4.42	11.29	4.48	11.66	4.51	12.06	4.54	12.90	4.60	13.82	4.65

12. Capacity Table

12-7. AJ140TXJ5KH/EA

COOLING

Combination (Capacity Index)					Combination (Total)	Combination (%)	Outdoor Temperature (°C,DB)	Indoor Temperature(°C, WB)													
								14		16		18		19		20		22		24	
								TC(kW)	PI(kW)	TC(kW)	PI(kW)	TC(kW)	PI(kW)	TC(kW)	PI(kW)	TC(kW)	PI(kW)	TC(kW)	PI(kW)	TC(kW)	PI(kW)
2000	2000	2000	3500	5000	14500	104%	10	15.74	3.40	16.36	3.47	16.99	3.54	17.30	3.58	17.62	3.61	18.27	3.69	18.93	3.76
							12	15.47	3.49	16.09	3.56	16.72	3.63	17.03	3.67	17.35	3.71	18.00	3.78	18.66	3.85
							14	15.20	3.58	15.82	3.65	16.45	3.73	16.76	3.76	17.09	3.80	17.73	3.87	18.39	3.95
							16	14.92	3.67	15.55	3.75	16.18	3.82	16.50	3.86	16.82	3.90	17.47	3.97	18.13	4.04
							18	14.65	3.77	15.28	3.84	15.91	3.92	16.23	3.96	16.55	3.99	17.20	4.07	17.86	4.14
							20	14.38	3.87	15.01	3.94	15.64	4.02	15.96	4.05	16.28	4.09	16.93	4.17	17.60	4.24
							21	14.25	3.92	14.87	3.99	15.51	4.07	15.83	4.10	16.15	4.14	16.80	4.22	17.46	4.29
							23	13.98	4.02	14.60	4.09	15.24	4.17	15.56	4.21	15.88	4.24	16.54	4.32	17.20	4.40
							25	13.71	4.12	14.34	4.20	14.97	4.27	15.29	4.31	15.62	4.35	16.27	4.42	16.94	4.50
							27	13.44	4.22	14.07	4.30	14.71	4.38	15.03	4.41	15.35	4.45	16.01	4.53	16.68	4.61
							29	13.17	4.33	13.80	4.41	14.44	4.48	14.76	4.52	15.09	4.56	15.75	4.64	16.41	4.71
							31	12.91	4.44	13.54	4.51	14.18	4.59	14.50	4.63	14.83	4.67	15.48	4.75	16.15	4.82
							33	12.64	4.54	13.27	4.62	13.91	4.70	14.24	4.74	14.56	4.78	15.22	4.86	15.89	4.93
							35	12.37	4.65	13.01	4.73	13.65	4.81	14.00	4.84	14.30	4.89	14.96	4.97	15.63	5.05
							37	12.11	4.77	12.74	4.85	13.39	4.92	13.71	4.96	14.04	5.00	14.70	5.08	15.37	5.16
							39	11.85	4.88	12.48	4.96	13.13	5.04	13.45	5.08	13.78	5.12	14.44	5.20	15.12	5.28
							42	11.45	5.05	12.09	5.13	12.73	5.21	13.06	5.25	13.39	5.29	14.06	5.37	14.73	5.45
							44	11.19	5.17	11.83	5.25	12.47	5.33	12.80	5.37	13.13	5.41	13.80	5.49	14.47	5.58
							46	10.93	5.29	11.57	5.37	12.22	5.45	12.54	5.49	12.87	5.53	13.54	5.62	14.22	5.70
2000	2000	2000	3500	6800	16300	116%	10	15.74	3.40	16.36	3.47	16.99	3.54	17.30	3.58	17.62	3.61	18.27	3.69	18.93	3.76
							12	15.47	3.49	16.09	3.56	16.72	3.63	17.03	3.67	17.35	3.71	18.00	3.78	18.66	3.85
							14	15.20	3.58	15.82	3.65	16.45	3.73	16.76	3.76	17.09	3.80	17.73	3.87	18.39	3.95
							16	14.92	3.67	15.55	3.75	16.18	3.82	16.50	3.86	16.82	3.90	17.47	3.97	18.13	4.04
							18	14.65	3.77	15.28	3.84	15.91	3.92	16.23	3.96	16.55	3.99	17.20	4.07	17.86	4.14
							20	14.38	3.87	15.01	3.94	15.64	4.02	15.96	4.05	16.28	4.09	16.93	4.17	17.60	4.24
							21	14.25	3.92	14.87	3.99	15.51	4.07	15.83	4.10	16.15	4.14	16.80	4.22	17.46	4.29
							23	13.98	4.02	14.60	4.09	15.24	4.17	15.56	4.21	15.88	4.24	16.54	4.32	17.20	4.40
							25	13.71	4.12	14.34	4.20	14.97	4.27	15.29	4.31	15.62	4.35	16.27	4.42	16.94	4.50
							27	13.44	4.22	14.07	4.30	14.71	4.38	15.03	4.41	15.35	4.45	16.01	4.53	16.68	4.61
							29	13.17	4.33	13.80	4.41	14.44	4.48	14.76	4.52	15.09	4.56	15.75	4.64	16.41	4.71
							31	12.91	4.44	13.54	4.51	14.18	4.59	14.50	4.63	14.83	4.67	15.48	4.75	16.15	4.82
							33	12.64	4.54	13.27	4.62	13.91	4.70	14.24	4.74	14.56	4.78	15.22	4.86	15.89	4.93
							35	12.37	4.65	13.01	4.73	13.65	4.81	14.00	4.84	14.30	4.89	14.96	4.97	15.63	5.05
							37	12.11	4.77	12.74	4.85	13.39	4.92	13.71	4.96	14.04	5.00	14.70	5.08	15.37	5.16
							39	11.85	4.88	12.48	4.96	13.13	5.04	13.45	5.08	13.78	5.12	14.44	5.20	15.12	5.28
							42	11.45	5.05	12.09	5.13	12.73	5.21	13.06	5.25	13.39	5.29	14.06	5.37	14.73	5.45
							44	11.19	5.17	11.83	5.25	12.47	5.33	12.80	5.37	13.13	5.41	13.80	5.49	14.47	5.58
							46	10.93	5.29	11.57	5.37	12.22	5.45	12.54	5.49	12.87	5.53	13.54	5.62	14.22	5.70

12. Capacity Table

12-7. AJ140TXJ5KH/EA

COOLING

Combination (Capacity Index)					Combination (Total)	Combination (%)	Outdoor Temperature (°C,DB)	Indoor Temperature(°C, WB)													
								14		16		18		19		20		22		24	
								TC(kW)	PI(kW)	TC(kW)	PI(kW)	TC(kW)	PI(kW)	TC(kW)	PI(kW)	TC(kW)	PI(kW)	TC(kW)	PI(kW)	TC(kW)	PI(kW)
2000	2000	2000	5000	5000	16000	114%	10	15.74	3.40	16.36	3.47	16.99	3.54	17.30	3.58	17.62	3.61	18.27	3.69	18.93	3.76
							12	15.47	3.49	16.09	3.56	16.72	3.63	17.03	3.67	17.35	3.71	18.00	3.78	18.66	3.85
							14	15.20	3.58	15.82	3.65	16.45	3.73	16.76	3.76	17.09	3.80	17.73	3.87	18.39	3.95
							16	14.92	3.67	15.55	3.75	16.18	3.82	16.50	3.86	16.82	3.90	17.47	3.97	18.13	4.04
							18	14.65	3.77	15.28	3.84	15.91	3.92	16.23	3.96	16.55	3.99	17.20	4.07	17.86	4.14
							20	14.38	3.87	15.01	3.94	15.64	4.02	15.96	4.05	16.28	4.09	16.93	4.17	17.60	4.24
							21	14.25	3.92	14.87	3.99	15.51	4.07	15.83	4.10	16.15	4.14	16.80	4.22	17.46	4.29
							23	13.98	4.02	14.60	4.09	15.24	4.17	15.56	4.21	15.88	4.24	16.54	4.32	17.20	4.40
							25	13.71	4.12	14.34	4.20	14.97	4.27	15.29	4.31	15.62	4.35	16.27	4.42	16.94	4.50
							27	13.44	4.22	14.07	4.30	14.71	4.38	15.03	4.41	15.35	4.45	16.01	4.53	16.68	4.61
							29	13.17	4.33	13.80	4.41	14.44	4.48	14.76	4.52	15.09	4.56	15.75	4.64	16.41	4.71
							31	12.91	4.44	13.54	4.51	14.18	4.59	14.50	4.63	14.83	4.67	15.48	4.75	16.15	4.82
							33	12.64	4.54	13.27	4.62	13.91	4.70	14.24	4.74	14.56	4.78	15.22	4.86	15.89	4.93
							35	12.37	4.65	13.01	4.73	13.65	4.81	14.00	4.84	14.30	4.89	14.96	4.97	15.63	5.05
							37	12.11	4.77	12.74	4.85	13.39	4.92	13.71	4.96	14.04	5.00	14.70	5.08	15.37	5.16
							39	11.85	4.88	12.48	4.96	13.13	5.04	13.45	5.08	13.78	5.12	14.44	5.20	15.12	5.28
							42	11.45	5.05	12.09	5.13	12.73	5.21	13.06	5.25	13.39	5.29	14.06	5.37	14.73	5.45
							44	11.19	5.17	11.83	5.25	12.47	5.33	12.80	5.37	13.13	5.41	13.80	5.49	14.47	5.58
							46	10.93	5.29	11.57	5.37	12.22	5.45	12.54	5.49	12.87	5.53	13.54	5.62	14.22	5.70
2000	2000	2500	2500	2500	11500	82%	10	10.62	2.89	14.98	2.96	15.27	3.03	15.44	3.07	15.63	3.10	16.07	3.16	16.58	3.23
							12	10.62	2.96	14.58	3.03	14.88	3.10	15.06	3.14	15.26	3.17	15.72	3.24	16.25	3.30
							14	10.62	3.03	14.19	3.11	14.51	3.18	14.70	3.21	14.91	3.24	15.39	3.31	15.95	3.37
							16	10.62	3.11	13.81	3.18	14.16	3.25	14.36	3.29	14.58	3.32	15.08	3.39	15.66	3.45
							18	10.62	3.19	13.45	3.26	13.82	3.33	14.03	3.37	14.26	3.40	14.78	3.46	15.38	3.53
							20	10.62	3.27	13.11	3.34	13.50	3.41	13.72	3.45	13.96	3.48	14.51	3.54	15.12	3.61
							21	10.62	3.31	12.95	3.38	13.35	3.45	13.57	3.49	13.82	3.52	14.37	3.58	15.00	3.65
							23	10.62	3.40	12.63	3.47	13.05	3.54	13.29	3.57	13.55	3.60	14.12	3.67	14.77	3.73
							25	10.62	3.48	12.33	3.56	12.77	3.62	13.02	3.66	13.29	3.69	13.88	3.75	14.55	3.81
							27	10.62	3.57	12.05	3.64	12.51	3.71	12.77	3.75	13.05	3.78	13.66	3.84	14.35	3.90
							29	10.62	3.66	11.79	3.73	12.27	3.80	12.54	3.84	12.82	3.87	13.46	3.93	14.17	3.99
							31	10.62	3.76	11.54	3.83	12.04	3.90	12.32	3.93	12.62	3.96	13.27	4.02	14.00	4.08
							33	10.62	3.85	11.30	3.92	11.83	3.99	12.12	4.02	12.43	4.06	13.10	4.12	13.85	4.18
							35	10.62	3.95	11.09	4.02	11.63	4.09	12.02	4.11	12.25	4.15	12.95	4.21	13.72	4.27
							37	10.62	4.05	10.89	4.12	11.45	4.19	11.76	4.22	12.09	4.25	12.81	4.31	13.60	4.37
							39	10.62	4.15	10.71	4.22	11.29	4.29	11.61	4.32	11.95	4.35	12.69	4.41	13.51	4.47
							42	10.62	4.31	10.47	4.38	11.08	4.44	11.42	4.48	11.77	4.51	12.54	4.57	13.39	4.63
							44	10.62	4.42	10.33	4.49	10.96	4.55	11.31	4.58	11.67	4.61	12.46	4.68	13.33	4.73
							46	10.62	4.53	10.20	4.59	10.86	4.66	11.22	4.69	11.59	4.72	12.40	4.78	13.29	4.84

12. Capacity Table

12-7. AJ140TXJ5KH/EA

COOLING

Combination (Capacity Index)					Combination (Total)	Combination (%)	Outdoor Temperature (°C,DB)	Indoor Temperature(°C, WB)													
								14		16		18		19		20		22		24	
								TC(kW)	PI(kW)	TC(kW)	PI(kW)	TC(kW)	PI(kW)	TC(kW)	PI(kW)	TC(kW)	PI(kW)	TC(kW)	PI(kW)	TC(kW)	PI(kW)
2000	2000	2500	2500	3500	12500	89%	10	11.05	2.78	15.58	2.85	15.88	2.91	16.06	2.95	16.25	2.98	16.71	3.04	17.24	3.10
							12	11.05	2.84	15.16	2.91	15.48	2.98	15.66	3.02	15.87	3.05	16.35	3.11	16.90	3.17
							14	11.05	2.92	14.75	2.99	15.09	3.05	15.29	3.09	15.51	3.12	16.01	3.18	16.58	3.24
							16	11.05	2.99	14.36	3.06	14.72	3.13	14.93	3.16	15.16	3.19	15.68	3.25	16.28	3.31
							18	11.05	3.07	13.99	3.14	14.37	3.20	14.59	3.23	14.83	3.27	15.37	3.33	15.99	3.39
							20	11.05	3.14	13.64	3.21	14.04	3.28	14.27	3.31	14.52	3.34	15.08	3.41	15.73	3.47
							21	11.05	3.18	13.47	3.25	13.88	3.32	14.12	3.35	14.37	3.38	14.95	3.45	15.60	3.50
							23	11.05	3.27	13.14	3.33	13.57	3.40	13.82	3.43	14.09	3.46	14.68	3.53	15.36	3.58
							25	11.05	3.35	12.83	3.42	13.28	3.48	13.54	3.51	13.82	3.55	14.44	3.61	15.13	3.67
							27	11.05	3.43	12.53	3.50	13.01	3.57	13.28	3.60	13.57	3.63	14.21	3.69	14.92	3.75
							29	11.05	3.52	12.26	3.59	12.76	3.65	13.04	3.69	13.34	3.72	14.00	3.78	14.73	3.84
							31	11.05	3.61	12.00	3.68	12.52	3.74	12.81	3.78	13.12	3.81	13.80	3.87	14.56	3.92
							33	11.05	3.70	11.76	3.77	12.30	3.83	12.60	3.87	12.92	3.90	13.62	3.96	14.41	4.02
							35	11.05	3.80	11.53	3.86	12.10	3.93	12.50	3.95	12.74	3.99	13.46	4.05	14.27	4.11
							37	11.05	3.89	11.32	3.96	11.91	4.02	12.23	4.05	12.58	4.09	13.32	4.15	14.15	4.20
							39	11.05	3.99	11.14	4.06	11.74	4.12	12.08	4.15	12.43	4.18	13.20	4.24	14.05	4.30
							42	11.05	4.14	10.88	4.21	11.52	4.27	11.87	4.30	12.24	4.33	13.04	4.39	13.92	4.45
							44	11.05	4.24	10.74	4.31	11.40	4.37	11.76	4.40	12.14	4.43	12.96	4.49	13.86	4.55
							46	11.05	4.35	10.61	4.42	11.29	4.48	11.66	4.51	12.06	4.54	12.90	4.60	13.82	4.65
2000	2000	2500	2500	5000	14000	100%	10	15.74	3.40	16.36	3.47	16.99	3.54	17.30	3.58	17.62	3.61	18.27	3.69	18.93	3.76
							12	15.47	3.49	16.09	3.56	16.72	3.63	17.03	3.67	17.35	3.71	18.00	3.78	18.66	3.85
							14	15.20	3.58	15.82	3.65	16.45	3.73	16.76	3.76	17.09	3.80	17.73	3.87	18.39	3.95
							16	14.92	3.67	15.55	3.75	16.18	3.82	16.50	3.86	16.82	3.90	17.47	3.97	18.13	4.04
							18	14.65	3.77	15.28	3.84	15.91	3.92	16.23	3.96	16.55	3.99	17.20	4.07	17.86	4.14
							20	14.38	3.87	15.01	3.94	15.64	4.02	15.96	4.05	16.28	4.09	16.93	4.17	17.60	4.24
							21	14.25	3.92	14.87	3.99	15.51	4.07	15.83	4.10	16.15	4.14	16.80	4.22	17.46	4.29
							23	13.98	4.02	14.60	4.09	15.24	4.17	15.56	4.21	15.88	4.24	16.54	4.32	17.20	4.40
							25	13.71	4.12	14.34	4.20	14.97	4.27	15.29	4.31	15.62	4.35	16.27	4.42	16.94	4.50
							27	13.44	4.22	14.07	4.30	14.71	4.38	15.03	4.41	15.35	4.45	16.01	4.53	16.68	4.61
							29	13.17	4.33	13.80	4.41	14.44	4.48	14.76	4.52	15.09	4.56	15.75	4.64	16.41	4.71
							31	12.91	4.44	13.54	4.51	14.18	4.59	14.50	4.63	14.83	4.67	15.48	4.75	16.15	4.82
							33	12.64	4.54	13.27	4.62	13.91	4.70	14.24	4.74	14.56	4.78	15.22	4.86	15.89	4.93
							35	12.37	4.65	13.01	4.73	13.65	4.81	14.00	4.84	14.30	4.89	14.96	4.97	15.63	5.05
							37	12.11	4.77	12.74	4.85	13.39	4.92	13.71	4.96	14.04	5.00	14.70	5.08	15.37	5.16
							39	11.85	4.88	12.48	4.96	13.13	5.04	13.45	5.08	13.78	5.12	14.44	5.20	15.12	5.28
							42	11.45	5.05	12.09	5.13	12.73	5.21	13.06	5.25	13.39	5.29	14.06	5.37	14.73	5.45
							44	11.19	5.17	11.83	5.25	12.47	5.33	12.80	5.37	13.13	5.41	13.80	5.49	14.47	5.58
							46	10.93	5.29	11.57	5.37	12.22	5.45	12.54	5.49	12.87	5.53	13.54	5.62	14.22	5.70

12. Capacity Table

12-7. AJ140TXJ5KH/EA

COOLING

Combination (Capacity Index)					Combination (Total)	Combination (%)	Outdoor Temperature (°C,DB)	Indoor Temperature(°C, WB)													
								14		16		18		19		20		22		24	
								TC(kW)	PI(kW)	TC(kW)	PI(kW)	TC(kW)	PI(kW)	TC(kW)	PI(kW)	TC(kW)	PI(kW)	TC(kW)	PI(kW)	TC(kW)	PI(kW)
2000	2000	2500	2500	6800	15800	113%	10	15.74	3.40	16.36	3.47	16.99	3.54	17.30	3.58	17.62	3.61	18.27	3.69	18.93	3.76
							12	15.47	3.49	16.09	3.56	16.72	3.63	17.03	3.67	17.35	3.71	18.00	3.78	18.66	3.85
							14	15.20	3.58	15.82	3.65	16.45	3.73	16.76	3.76	17.09	3.80	17.73	3.87	18.39	3.95
							16	14.92	3.67	15.55	3.75	16.18	3.82	16.50	3.86	16.82	3.90	17.47	3.97	18.13	4.04
							18	14.65	3.77	15.28	3.84	15.91	3.92	16.23	3.96	16.55	3.99	17.20	4.07	17.86	4.14
							20	14.38	3.87	15.01	3.94	15.64	4.02	15.96	4.05	16.28	4.09	16.93	4.17	17.60	4.24
							21	14.25	3.92	14.87	3.99	15.51	4.07	15.83	4.10	16.15	4.14	16.80	4.22	17.46	4.29
							23	13.98	4.02	14.60	4.09	15.24	4.17	15.56	4.21	15.88	4.24	16.54	4.32	17.20	4.40
							25	13.71	4.12	14.34	4.20	14.97	4.27	15.29	4.31	15.62	4.35	16.27	4.42	16.94	4.50
							27	13.44	4.22	14.07	4.30	14.71	4.38	15.03	4.41	15.35	4.45	16.01	4.53	16.68	4.61
							29	13.17	4.33	13.80	4.41	14.44	4.48	14.76	4.52	15.09	4.56	15.75	4.64	16.41	4.71
							31	12.91	4.44	13.54	4.51	14.18	4.59	14.50	4.63	14.83	4.67	15.48	4.75	16.15	4.82
							33	12.64	4.54	13.27	4.62	13.91	4.70	14.24	4.74	14.56	4.78	15.22	4.86	15.89	4.93
							35	12.37	4.65	13.01	4.73	13.65	4.81	14.00	4.84	14.30	4.89	14.96	4.97	15.63	5.05
							37	12.11	4.77	12.74	4.85	13.39	4.92	13.71	4.96	14.04	5.00	14.70	5.08	15.37	5.16
							39	11.85	4.88	12.48	4.96	13.13	5.04	13.45	5.08	13.78	5.12	14.44	5.20	15.12	5.28
							42	11.45	5.05	12.09	5.13	12.73	5.21	13.06	5.25	13.39	5.29	14.06	5.37	14.73	5.45
							44	11.19	5.17	11.83	5.25	12.47	5.33	12.80	5.37	13.13	5.41	13.80	5.49	14.47	5.58
							46	10.93	5.29	11.57	5.37	12.22	5.45	12.54	5.49	12.87	5.53	13.54	5.62	14.22	5.70
2000	2000	2500	3500	3500	13500	96%	10	11.93	3.11	16.83	3.19	17.15	3.27	17.34	3.30	17.55	3.34	18.04	3.41	18.62	3.48
							12	11.93	3.19	16.37	3.27	16.71	3.34	16.92	3.38	17.14	3.42	17.66	3.49	18.26	3.56
							14	11.93	3.27	15.93	3.35	16.30	3.42	16.51	3.46	16.75	3.50	17.29	3.57	17.91	3.64
							16	11.93	3.35	15.51	3.43	15.90	3.51	16.13	3.54	16.37	3.58	16.94	3.65	17.58	3.72
							18	11.93	3.44	15.11	3.52	15.52	3.59	15.76	3.63	16.02	3.66	16.60	3.73	17.27	3.80
							20	11.93	3.53	14.73	3.60	15.16	3.68	15.41	3.71	15.68	3.75	16.29	3.82	16.98	3.89
							21	11.93	3.57	14.54	3.65	14.99	3.72	15.25	3.76	15.52	3.79	16.14	3.86	16.85	3.93
							23	11.93	3.66	14.19	3.74	14.66	3.81	14.93	3.85	15.21	3.88	15.86	3.95	16.59	4.02
							25	11.93	3.76	13.85	3.83	14.35	3.91	14.62	3.94	14.93	3.98	15.59	4.05	16.34	4.11
							27	11.93	3.85	13.54	3.93	14.05	4.00	14.34	4.04	14.65	4.07	15.34	4.14	16.12	4.21
							29	11.93	3.95	13.24	4.03	13.78	4.10	14.08	4.13	14.40	4.17	15.11	4.24	15.91	4.30
							31	11.93	4.05	12.96	4.13	13.52	4.20	13.83	4.23	14.17	4.27	14.91	4.34	15.73	4.40
							33	11.93	4.15	12.70	4.23	13.28	4.30	13.61	4.34	13.96	4.37	14.71	4.44	15.56	4.50
							35	11.93	4.26	12.45	4.33	13.06	4.41	13.50	4.43	13.76	4.48	14.54	4.54	15.41	4.61
							37	11.93	4.37	12.23	4.44	12.86	4.51	13.21	4.55	13.58	4.58	14.39	4.65	15.28	4.71
							39	11.93	4.48	12.03	4.55	12.68	4.62	13.04	4.66	13.43	4.69	14.25	4.76	15.17	4.82
							42	11.93	4.65	11.75	4.72	12.45	4.79	12.82	4.82	13.22	4.86	14.09	4.93	15.04	4.99
							44	11.93	4.76	11.60	4.83	12.31	4.91	12.70	4.94	13.11	4.97	14.00	5.04	14.97	5.10
							46	11.93	4.88	11.46	4.95	12.20	5.02	12.60	5.06	13.02	5.09	13.93	5.16	14.93	5.22

12. Capacity Table

12-7. AJ140TXJ5KH/EA

COOLING

Combination (Capacity Index)					Combination (Total)	Combination (%)	Outdoor Temperature (°C,DB)	Indoor Temperature(°C, WB)													
								14		16		18		19		20		22		24	
								TC(kW)	PI(kW)	TC(kW)	PI(kW)	TC(kW)	PI(kW)	TC(kW)	PI(kW)	TC(kW)	PI(kW)	TC(kW)	PI(kW)	TC(kW)	PI(kW)
2000	2000	2500	3500	5000	15000	107%	10	15.74	3.40	16.36	3.47	16.99	3.54	17.30	3.58	17.62	3.61	18.27	3.69	18.93	3.76
							12	15.47	3.49	16.09	3.56	16.72	3.63	17.03	3.67	17.35	3.71	18.00	3.78	18.66	3.85
							14	15.20	3.58	15.82	3.65	16.45	3.73	16.76	3.76	17.09	3.80	17.73	3.87	18.39	3.95
							16	14.92	3.67	15.55	3.75	16.18	3.82	16.50	3.86	16.82	3.90	17.47	3.97	18.13	4.04
							18	14.65	3.77	15.28	3.84	15.91	3.92	16.23	3.96	16.55	3.99	17.20	4.07	17.86	4.14
							20	14.38	3.87	15.01	3.94	15.64	4.02	15.96	4.05	16.28	4.09	16.93	4.17	17.60	4.24
							21	14.25	3.92	14.87	3.99	15.51	4.07	15.83	4.10	16.15	4.14	16.80	4.22	17.46	4.29
							23	13.98	4.02	14.60	4.09	15.24	4.17	15.56	4.21	15.88	4.24	16.54	4.32	17.20	4.40
							25	13.71	4.12	14.34	4.20	14.97	4.27	15.29	4.31	15.62	4.35	16.27	4.42	16.94	4.50
							27	13.44	4.22	14.07	4.30	14.71	4.38	15.03	4.41	15.35	4.45	16.01	4.53	16.68	4.61
							29	13.17	4.33	13.80	4.41	14.44	4.48	14.76	4.52	15.09	4.56	15.75	4.64	16.41	4.71
							31	12.91	4.44	13.54	4.51	14.18	4.59	14.50	4.63	14.83	4.67	15.48	4.75	16.15	4.82
							33	12.64	4.54	13.27	4.62	13.91	4.70	14.24	4.74	14.56	4.78	15.22	4.86	15.89	4.93
							35	12.37	4.65	13.01	4.73	13.65	4.81	14.00	4.84	14.30	4.89	14.96	4.97	15.63	5.05
							37	12.11	4.77	12.74	4.85	13.39	4.92	13.71	4.96	14.04	5.00	14.70	5.08	15.37	5.16
							39	11.85	4.88	12.48	4.96	13.13	5.04	13.45	5.08	13.78	5.12	14.44	5.20	15.12	5.28
							42	11.45	5.05	12.09	5.13	12.73	5.21	13.06	5.25	13.39	5.29	14.06	5.37	14.73	5.45
							44	11.19	5.17	11.83	5.25	12.47	5.33	12.80	5.37	13.13	5.41	13.80	5.49	14.47	5.58
							46	10.93	5.29	11.57	5.37	12.22	5.45	12.54	5.49	12.87	5.53	13.54	5.62	14.22	5.70
2000	2000	2500	3500	6800	16800	120%	10	15.74	3.40	16.36	3.47	16.99	3.54	17.30	3.58	17.62	3.61	18.27	3.69	18.93	3.76
							12	15.47	3.49	16.09	3.56	16.72	3.63	17.03	3.67	17.35	3.71	18.00	3.78	18.66	3.85
							14	15.20	3.58	15.82	3.65	16.45	3.73	16.76	3.76	17.09	3.80	17.73	3.87	18.39	3.95
							16	14.92	3.67	15.55	3.75	16.18	3.82	16.50	3.86	16.82	3.90	17.47	3.97	18.13	4.04
							18	14.65	3.77	15.28	3.84	15.91	3.92	16.23	3.96	16.55	3.99	17.20	4.07	17.86	4.14
							20	14.38	3.87	15.01	3.94	15.64	4.02	15.96	4.05	16.28	4.09	16.93	4.17	17.60	4.24
							21	14.25	3.92	14.87	3.99	15.51	4.07	15.83	4.10	16.15	4.14	16.80	4.22	17.46	4.29
							23	13.98	4.02	14.60	4.09	15.24	4.17	15.56	4.21	15.88	4.24	16.54	4.32	17.20	4.40
							25	13.71	4.12	14.34	4.20	14.97	4.27	15.29	4.31	15.62	4.35	16.27	4.42	16.94	4.50
							27	13.44	4.22	14.07	4.30	14.71	4.38	15.03	4.41	15.35	4.45	16.01	4.53	16.68	4.61
							29	13.17	4.33	13.80	4.41	14.44	4.48	14.76	4.52	15.09	4.56	15.75	4.64	16.41	4.71
							31	12.91	4.44	13.54	4.51	14.18	4.59	14.50	4.63	14.83	4.67	15.48	4.75	16.15	4.82
							33	12.64	4.54	13.27	4.62	13.91	4.70	14.24	4.74	14.56	4.78	15.22	4.86	15.89	4.93
							35	12.37	4.65	13.01	4.73	13.65	4.81	14.00	4.84	14.30	4.89	14.96	4.97	15.63	5.05
							37	12.11	4.77	12.74	4.85	13.39	4.92	13.71	4.96	14.04	5.00	14.70	5.08	15.37	5.16
							39	11.85	4.88	12.48	4.96	13.13	5.04	13.45	5.08	13.78	5.12	14.44	5.20	15.12	5.28
							42	11.45	5.05	12.09	5.13	12.73	5.21	13.06	5.25	13.39	5.29	14.06	5.37	14.73	5.45
							44	11.19	5.17	11.83	5.25	12.47	5.33	12.80	5.37	13.13	5.41	13.80	5.49	14.47	5.58
							46	10.93	5.29	11.57	5.37	12.22	5.45	12.54	5.49	12.87	5.53	13.54	5.62	14.22	5.70

12. Capacity Table

12-7. AJ140TXJ5KH/EA

COOLING

Combination (Capacity Index)					Combination (Total)	Combination (%)	Outdoor Temperature (°C,DB)	Indoor Temperature(°C, WB)													
								14		16		18		19		20		22		24	
								TC(kW)	PI(kW)	TC(kW)	PI(kW)	TC(kW)	PI(kW)	TC(kW)	PI(kW)	TC(kW)	PI(kW)	TC(kW)	PI(kW)	TC(kW)	PI(kW)
2000	2000	2500	5000	5000	16500	118%	10	15.74	3.40	16.36	3.47	16.99	3.54	17.30	3.58	17.62	3.61	18.27	3.69	18.93	3.76
							12	15.47	3.49	16.09	3.56	16.72	3.63	17.03	3.67	17.35	3.71	18.00	3.78	18.66	3.85
							14	15.20	3.58	15.82	3.65	16.45	3.73	16.76	3.76	17.09	3.80	17.73	3.87	18.39	3.95
							16	14.92	3.67	15.55	3.75	16.18	3.82	16.50	3.86	16.82	3.90	17.47	3.97	18.13	4.04
							18	14.65	3.77	15.28	3.84	15.91	3.92	16.23	3.96	16.55	3.99	17.20	4.07	17.86	4.14
							20	14.38	3.87	15.01	3.94	15.64	4.02	15.96	4.05	16.28	4.09	16.93	4.17	17.60	4.24
							21	14.25	3.92	14.87	3.99	15.51	4.07	15.83	4.10	16.15	4.14	16.80	4.22	17.46	4.29
							23	13.98	4.02	14.60	4.09	15.24	4.17	15.56	4.21	15.88	4.24	16.54	4.32	17.20	4.40
							25	13.71	4.12	14.34	4.20	14.97	4.27	15.29	4.31	15.62	4.35	16.27	4.42	16.94	4.50
							27	13.44	4.22	14.07	4.30	14.71	4.38	15.03	4.41	15.35	4.45	16.01	4.53	16.68	4.61
							29	13.17	4.33	13.80	4.41	14.44	4.48	14.76	4.52	15.09	4.56	15.75	4.64	16.41	4.71
							31	12.91	4.44	13.54	4.51	14.18	4.59	14.50	4.63	14.83	4.67	15.48	4.75	16.15	4.82
							33	12.64	4.54	13.27	4.62	13.91	4.70	14.24	4.74	14.56	4.78	15.22	4.86	15.89	4.93
							35	12.37	4.65	13.01	4.73	13.65	4.81	14.00	4.84	14.30	4.89	14.96	4.97	15.63	5.05
							37	12.11	4.77	12.74	4.85	13.39	4.92	13.71	4.96	14.04	5.00	14.70	5.08	15.37	5.16
							39	11.85	4.88	12.48	4.96	13.13	5.04	13.45	5.08	13.78	5.12	14.44	5.20	15.12	5.28
							42	11.45	5.05	12.09	5.13	12.73	5.21	13.06	5.25	13.39	5.29	14.06	5.37	14.73	5.45
							44	11.19	5.17	11.83	5.25	12.47	5.33	12.80	5.37	13.13	5.41	13.80	5.49	14.47	5.58
							46	10.93	5.29	11.57	5.37	12.22	5.45	12.54	5.49	12.87	5.53	13.54	5.62	14.22	5.70
2000	2000	3500	3500	3500	14500	104%	10	15.74	3.40	16.36	3.47	16.99	3.54	17.30	3.58	17.62	3.61	18.27	3.69	18.93	3.76
							12	15.47	3.49	16.09	3.56	16.72	3.63	17.03	3.67	17.35	3.71	18.00	3.78	18.66	3.85
							14	15.20	3.58	15.82	3.65	16.45	3.73	16.76	3.76	17.09	3.80	17.73	3.87	18.39	3.95
							16	14.92	3.67	15.55	3.75	16.18	3.82	16.50	3.86	16.82	3.90	17.47	3.97	18.13	4.04
							18	14.65	3.77	15.28	3.84	15.91	3.92	16.23	3.96	16.55	3.99	17.20	4.07	17.86	4.14
							20	14.38	3.87	15.01	3.94	15.64	4.02	15.96	4.05	16.28	4.09	16.93	4.17	17.60	4.24
							21	14.25	3.92	14.87	3.99	15.51	4.07	15.83	4.10	16.15	4.14	16.80	4.22	17.46	4.29
							23	13.98	4.02	14.60	4.09	15.24	4.17	15.56	4.21	15.88	4.24	16.54	4.32	17.20	4.40
							25	13.71	4.12	14.34	4.20	14.97	4.27	15.29	4.31	15.62	4.35	16.27	4.42	16.94	4.50
							27	13.44	4.22	14.07	4.30	14.71	4.38	15.03	4.41	15.35	4.45	16.01	4.53	16.68	4.61
							29	13.17	4.33	13.80	4.41	14.44	4.48	14.76	4.52	15.09	4.56	15.75	4.64	16.41	4.71
							31	12.91	4.44	13.54	4.51	14.18	4.59	14.50	4.63	14.83	4.67	15.48	4.75	16.15	4.82
							33	12.64	4.54	13.27	4.62	13.91	4.70	14.24	4.74	14.56	4.78	15.22	4.86	15.89	4.93
							35	12.37	4.65	13.01	4.73	13.65	4.81	14.00	4.84	14.30	4.89	14.96	4.97	15.63	5.05
							37	12.11	4.77	12.74	4.85	13.39	4.92	13.71	4.96	14.04	5.00	14.70	5.08	15.37	5.16
							39	11.85	4.88	12.48	4.96	13.13	5.04	13.45	5.08	13.78	5.12	14.44	5.20	15.12	5.28
							42	11.45	5.05	12.09	5.13	12.73	5.21	13.06	5.25	13.39	5.29	14.06	5.37	14.73	5.45
							44	11.19	5.17	11.83	5.25	12.47	5.33	12.80	5.37	13.13	5.41	13.80	5.49	14.47	5.58
							46	10.93	5.29	11.57	5.37	12.22	5.45	12.54	5.49	12.87	5.53	13.54	5.62	14.22	5.70

12. Capacity Table

12-7. AJ140TXJ5KH/EA

COOLING

Combination (Capacity Index)					Combination (Total)	Combination (%)	Outdoor Temperature (°C,DB)	Indoor Temperature(°C, WB)													
								14		16		18		19		20		22		24	
								TC(kW)	PI(kW)	TC(kW)	PI(kW)	TC(kW)	PI(kW)	TC(kW)	PI(kW)	TC(kW)	PI(kW)	TC(kW)	PI(kW)	TC(kW)	PI(kW)
2000	2000	3500	3500	5000	16000	114%	10	15.74	3.40	16.36	3.47	16.99	3.54	17.30	3.58	17.62	3.61	18.27	3.69	18.93	3.76
							12	15.47	3.49	16.09	3.56	16.72	3.63	17.03	3.67	17.35	3.71	18.00	3.78	18.66	3.85
							14	15.20	3.58	15.82	3.65	16.45	3.73	16.76	3.76	17.09	3.80	17.73	3.87	18.39	3.95
							16	14.92	3.67	15.55	3.75	16.18	3.82	16.50	3.86	16.82	3.90	17.47	3.97	18.13	4.04
							18	14.65	3.77	15.28	3.84	15.91	3.92	16.23	3.96	16.55	3.99	17.20	4.07	17.86	4.14
							20	14.38	3.87	15.01	3.94	15.64	4.02	15.96	4.05	16.28	4.09	16.93	4.17	17.60	4.24
							21	14.25	3.92	14.87	3.99	15.51	4.07	15.83	4.10	16.15	4.14	16.80	4.22	17.46	4.29
							23	13.98	4.02	14.60	4.09	15.24	4.17	15.56	4.21	15.88	4.24	16.54	4.32	17.20	4.40
							25	13.71	4.12	14.34	4.20	14.97	4.27	15.29	4.31	15.62	4.35	16.27	4.42	16.94	4.50
							27	13.44	4.22	14.07	4.30	14.71	4.38	15.03	4.41	15.35	4.45	16.01	4.53	16.68	4.61
							29	13.17	4.33	13.80	4.41	14.44	4.48	14.76	4.52	15.09	4.56	15.75	4.64	16.41	4.71
							31	12.91	4.44	13.54	4.51	14.18	4.59	14.50	4.63	14.83	4.67	15.48	4.75	16.15	4.82
							33	12.64	4.54	13.27	4.62	13.91	4.70	14.24	4.74	14.56	4.78	15.22	4.86	15.89	4.93
							35	12.37	4.65	13.01	4.73	13.65	4.81	14.00	4.84	14.30	4.89	14.96	4.97	15.63	5.05
							37	12.11	4.77	12.74	4.85	13.39	4.92	13.71	4.96	14.04	5.00	14.70	5.08	15.37	5.16
							39	11.85	4.88	12.48	4.96	13.13	5.04	13.45	5.08	13.78	5.12	14.44	5.20	15.12	5.28
							42	11.45	5.05	12.09	5.13	12.73	5.21	13.06	5.25	13.39	5.29	14.06	5.37	14.73	5.45
							44	11.19	5.17	11.83	5.25	12.47	5.33	12.80	5.37	13.13	5.41	13.80	5.49	14.47	5.58
							46	10.93	5.29	11.57	5.37	12.22	5.45	12.54	5.49	12.87	5.53	13.54	5.62	14.22	5.70
2000	2000	3500	5000	5000	17500	125%	10	15.74	3.40	16.36	3.47	16.99	3.54	17.30	3.58	17.62	3.61	18.27	3.69	18.93	3.76
							12	15.47	3.49	16.09	3.56	16.72	3.63	17.03	3.67	17.35	3.71	18.00	3.78	18.66	3.85
							14	15.20	3.58	15.82	3.65	16.45	3.73	16.76	3.76	17.09	3.80	17.73	3.87	18.39	3.95
							16	14.92	3.67	15.55	3.75	16.18	3.82	16.50	3.86	16.82	3.90	17.47	3.97	18.13	4.04
							18	14.65	3.77	15.28	3.84	15.91	3.92	16.23	3.96	16.55	3.99	17.20	4.07	17.86	4.14
							20	14.38	3.87	15.01	3.94	15.64	4.02	15.96	4.05	16.28	4.09	16.93	4.17	17.60	4.24
							21	14.25	3.92	14.87	3.99	15.51	4.07	15.83	4.10	16.15	4.14	16.80	4.22	17.46	4.29
							23	13.98	4.02	14.60	4.09	15.24	4.17	15.56	4.21	15.88	4.24	16.54	4.32	17.20	4.40
							25	13.71	4.12	14.34	4.20	14.97	4.27	15.29	4.31	15.62	4.35	16.27	4.42	16.94	4.50
							27	13.44	4.22	14.07	4.30	14.71	4.38	15.03	4.41	15.35	4.45	16.01	4.53	16.68	4.61
							29	13.17	4.33	13.80	4.41	14.44	4.48	14.76	4.52	15.09	4.56	15.75	4.64	16.41	4.71
							31	12.91	4.44	13.54	4.51	14.18	4.59	14.50	4.63	14.83	4.67	15.48	4.75	16.15	4.82
							33	12.64	4.54	13.27	4.62	13.91	4.70	14.24	4.74	14.56	4.78	15.22	4.86	15.89	4.93
							35	12.37	4.65	13.01	4.73	13.65	4.81	14.00	4.84	14.30	4.89	14.96	4.97	15.63	5.05
							37	12.11	4.77	12.74	4.85	13.39	4.92	13.71	4.96	14.04	5.00	14.70	5.08	15.37	5.16
							39	11.85	4.88	12.48	4.96	13.13	5.04	13.45	5.08	13.78	5.12	14.44	5.20	15.12	5.28
							42	11.45	5.05	12.09	5.13	12.73	5.21	13.06	5.25	13.39	5.29	14.06	5.37	14.73	5.45
							44	11.19	5.17	11.83	5.25	12.47	5.33	12.80	5.37	13.13	5.41	13.80	5.49	14.47	5.58
							46	10.93	5.29	11.57	5.37	12.22	5.45	12.54	5.49	12.87	5.53	13.54	5.62	14.22	5.70

12. Capacity Table

12-7. AJ140TXJ5KH/EA

COOLING

Combination (Capacity Index)					Combination (Total)	Combination (%)	Outdoor Temperature (°C,DB)	Indoor Temperature(°C, WB)													
								14		16		18		19		20		22		24	
								TC(kW)	PI(kW)	TC(kW)	PI(kW)	TC(kW)	PI(kW)	TC(kW)	PI(kW)	TC(kW)	PI(kW)	TC(kW)	PI(kW)	TC(kW)	PI(kW)
2000	2500	2500	2500	2500	12000	86%	10	11.05	2.78	15.58	2.85	15.88	2.91	16.06	2.95	16.25	2.98	16.71	3.04	17.24	3.10
							12	11.05	2.84	15.16	2.91	15.48	2.98	15.66	3.02	15.87	3.05	16.35	3.11	16.90	3.17
							14	11.05	2.92	14.75	2.99	15.09	3.05	15.29	3.09	15.51	3.12	16.01	3.18	16.58	3.24
							16	11.05	2.99	14.36	3.06	14.72	3.13	14.93	3.16	15.16	3.19	15.68	3.25	16.28	3.31
							18	11.05	3.07	13.99	3.14	14.37	3.20	14.59	3.23	14.83	3.27	15.37	3.33	15.99	3.39
							20	11.05	3.14	13.64	3.21	14.04	3.28	14.27	3.31	14.52	3.34	15.08	3.41	15.73	3.47
							21	11.05	3.18	13.47	3.25	13.88	3.32	14.12	3.35	14.37	3.38	14.95	3.45	15.60	3.50
							23	11.05	3.27	13.14	3.33	13.57	3.40	13.82	3.43	14.09	3.46	14.68	3.53	15.36	3.58
							25	11.05	3.35	12.83	3.42	13.28	3.48	13.54	3.51	13.82	3.55	14.44	3.61	15.13	3.67
							27	11.05	3.43	12.53	3.50	13.01	3.57	13.28	3.60	13.57	3.63	14.21	3.69	14.92	3.75
							29	11.05	3.52	12.26	3.59	12.76	3.65	13.04	3.69	13.34	3.72	14.00	3.78	14.73	3.84
							31	11.05	3.61	12.00	3.68	12.52	3.74	12.81	3.78	13.12	3.81	13.80	3.87	14.56	3.92
							33	11.05	3.70	11.76	3.77	12.30	3.83	12.60	3.87	12.92	3.90	13.62	3.96	14.41	4.02
							35	11.05	3.80	11.53	3.86	12.10	3.93	12.50	3.95	12.74	3.99	13.46	4.05	14.27	4.11
							37	11.05	3.89	11.32	3.96	11.91	4.02	12.23	4.05	12.58	4.09	13.32	4.15	14.15	4.20
							39	11.05	3.99	11.14	4.06	11.74	4.12	12.08	4.15	12.43	4.18	13.20	4.24	14.05	4.30
							42	11.05	4.14	10.88	4.21	11.52	4.27	11.87	4.30	12.24	4.33	13.04	4.39	13.92	4.45
							44	11.05	4.24	10.74	4.31	11.40	4.37	11.76	4.40	12.14	4.43	12.96	4.49	13.86	4.55
							46	11.05	4.35	10.61	4.42	11.29	4.48	11.66	4.51	12.06	4.54	12.90	4.60	13.82	4.65
2000	2500	2500	2500	3500	13000	93%	10	11.49	2.94	16.21	3.02	16.51	3.09	16.70	3.13	16.90	3.16	17.38	3.23	17.93	3.29
							12	11.49	3.02	15.77	3.09	16.09	3.16	16.29	3.20	16.51	3.23	17.00	3.30	17.58	3.36
							14	11.49	3.09	15.34	3.17	15.69	3.24	15.90	3.27	16.13	3.31	16.65	3.37	17.25	3.44
							16	11.49	3.17	14.94	3.25	15.31	3.32	15.53	3.35	15.77	3.39	16.31	3.45	16.93	3.52
							18	11.49	3.25	14.55	3.33	14.95	3.40	15.18	3.43	15.43	3.47	15.99	3.53	16.63	3.59
							20	11.49	3.34	14.18	3.41	14.60	3.48	14.84	3.51	15.10	3.55	15.69	3.61	16.36	3.68
							21	11.49	3.38	14.00	3.45	14.43	3.52	14.68	3.56	14.95	3.59	15.54	3.65	16.22	3.72
							23	11.49	3.46	13.66	3.54	14.12	3.61	14.37	3.64	14.65	3.67	15.27	3.74	15.97	3.80
							25	11.49	3.55	13.34	3.62	13.81	3.69	14.08	3.73	14.37	3.76	15.01	3.83	15.74	3.89
							27	11.49	3.64	13.03	3.71	13.53	3.78	13.81	3.82	14.11	3.85	14.78	3.92	15.52	3.98
							29	11.49	3.74	12.75	3.81	13.27	3.88	13.56	3.91	13.87	3.94	14.56	4.01	15.32	4.07
							31	11.49	3.83	12.48	3.90	13.02	3.97	13.32	4.00	13.64	4.04	14.35	4.10	15.14	4.16
							33	11.49	3.93	12.23	4.00	12.79	4.07	13.10	4.10	13.44	4.13	14.17	4.20	14.98	4.26
							35	11.49	4.03	11.99	4.10	12.58	4.17	13.00	4.19	13.25	4.23	14.00	4.30	14.84	4.36
							37	11.49	4.13	11.78	4.20	12.39	4.27	12.72	4.30	13.08	4.33	13.86	4.40	14.71	4.46
							39	11.49	4.23	11.58	4.30	12.21	4.37	12.56	4.40	12.93	4.44	13.73	4.50	14.61	4.56
							42	11.49	4.39	11.32	4.46	11.98	4.53	12.35	4.56	12.73	4.60	13.57	4.66	14.48	4.72
							44	11.49	4.50	11.17	4.57	11.86	4.64	12.23	4.67	12.63	4.70	13.48	4.77	14.42	4.83
							46	11.49	4.61	11.03	4.68	11.74	4.75	12.13	4.78	12.54	4.82	13.41	4.88	14.37	4.94

12. Capacity Table

12-7. AJ140TXJ5KH/EA

COOLING

Combination (Capacity Index)					Combination (Total)	Combination (%)	Outdoor Temperature (°C,DB)	Indoor Temperature(°C, WB)													
								14		16		18		19		20		22		24	
								TC(kW)	PI(kW)	TC(kW)	PI(kW)	TC(kW)	PI(kW)	TC(kW)	PI(kW)	TC(kW)	PI(kW)	TC(kW)	PI(kW)	TC(kW)	PI(kW)
2000	2500	2500	2500	5000	14500	104%	10	15.74	3.40	16.36	3.47	16.99	3.54	17.30	3.58	17.62	3.61	18.27	3.69	18.93	3.76
							12	15.47	3.49	16.09	3.56	16.72	3.63	17.03	3.67	17.35	3.71	18.00	3.78	18.66	3.85
							14	15.20	3.58	15.82	3.65	16.45	3.73	16.76	3.76	17.09	3.80	17.73	3.87	18.39	3.95
							16	14.92	3.67	15.55	3.75	16.18	3.82	16.50	3.86	16.82	3.90	17.47	3.97	18.13	4.04
							18	14.65	3.77	15.28	3.84	15.91	3.92	16.23	3.96	16.55	3.99	17.20	4.07	17.86	4.14
							20	14.38	3.87	15.01	3.94	15.64	4.02	15.96	4.05	16.28	4.09	16.93	4.17	17.60	4.24
							21	14.25	3.92	14.87	3.99	15.51	4.07	15.83	4.10	16.15	4.14	16.80	4.22	17.46	4.29
							23	13.98	4.02	14.60	4.09	15.24	4.17	15.56	4.21	15.88	4.24	16.54	4.32	17.20	4.40
							25	13.71	4.12	14.34	4.20	14.97	4.27	15.29	4.31	15.62	4.35	16.27	4.42	16.94	4.50
							27	13.44	4.22	14.07	4.30	14.71	4.38	15.03	4.41	15.35	4.45	16.01	4.53	16.68	4.61
							29	13.17	4.33	13.80	4.41	14.44	4.48	14.76	4.52	15.09	4.56	15.75	4.64	16.41	4.71
							31	12.91	4.44	13.54	4.51	14.18	4.59	14.50	4.63	14.83	4.67	15.48	4.75	16.15	4.82
							33	12.64	4.54	13.27	4.62	13.91	4.70	14.24	4.74	14.56	4.78	15.22	4.86	15.89	4.93
							35	12.37	4.65	13.01	4.73	13.65	4.81	14.00	4.84	14.30	4.89	14.96	4.97	15.63	5.05
							37	12.11	4.77	12.74	4.85	13.39	4.92	13.71	4.96	14.04	5.00	14.70	5.08	15.37	5.16
							39	11.85	4.88	12.48	4.96	13.13	5.04	13.45	5.08	13.78	5.12	14.44	5.20	15.12	5.28
							42	11.45	5.05	12.09	5.13	12.73	5.21	13.06	5.25	13.39	5.29	14.06	5.37	14.73	5.45
							44	11.19	5.17	11.83	5.25	12.47	5.33	12.80	5.37	13.13	5.41	13.80	5.49	14.47	5.58
							46	10.93	5.29	11.57	5.37	12.22	5.45	12.54	5.49	12.87	5.53	13.54	5.62	14.22	5.70
2000	2500	2500	2500	6800	16300	116%	10	15.74	3.40	16.36	3.47	16.99	3.54	17.30	3.58	17.62	3.61	18.27	3.69	18.93	3.76
							12	15.47	3.49	16.09	3.56	16.72	3.63	17.03	3.67	17.35	3.71	18.00	3.78	18.66	3.85
							14	15.20	3.58	15.82	3.65	16.45	3.73	16.76	3.76	17.09	3.80	17.73	3.87	18.39	3.95
							16	14.92	3.67	15.55	3.75	16.18	3.82	16.50	3.86	16.82	3.90	17.47	3.97	18.13	4.04
							18	14.65	3.77	15.28	3.84	15.91	3.92	16.23	3.96	16.55	3.99	17.20	4.07	17.86	4.14
							20	14.38	3.87	15.01	3.94	15.64	4.02	15.96	4.05	16.28	4.09	16.93	4.17	17.60	4.24
							21	14.25	3.92	14.87	3.99	15.51	4.07	15.83	4.10	16.15	4.14	16.80	4.22	17.46	4.29
							23	13.98	4.02	14.60	4.09	15.24	4.17	15.56	4.21	15.88	4.24	16.54	4.32	17.20	4.40
							25	13.71	4.12	14.34	4.20	14.97	4.27	15.29	4.31	15.62	4.35	16.27	4.42	16.94	4.50
							27	13.44	4.22	14.07	4.30	14.71	4.38	15.03	4.41	15.35	4.45	16.01	4.53	16.68	4.61
							29	13.17	4.33	13.80	4.41	14.44	4.48	14.76	4.52	15.09	4.56	15.75	4.64	16.41	4.71
							31	12.91	4.44	13.54	4.51	14.18	4.59	14.50	4.63	14.83	4.67	15.48	4.75	16.15	4.82
							33	12.64	4.54	13.27	4.62	13.91	4.70	14.24	4.74	14.56	4.78	15.22	4.86	15.89	4.93
							35	12.37	4.65	13.01	4.73	13.65	4.81	14.00	4.84	14.30	4.89	14.96	4.97	15.63	5.05
							37	12.11	4.77	12.74	4.85	13.39	4.92	13.71	4.96	14.04	5.00	14.70	5.08	15.37	5.16
							39	11.85	4.88	12.48	4.96	13.13	5.04	13.45	5.08	13.78	5.12	14.44	5.20	15.12	5.28
							42	11.45	5.05	12.09	5.13	12.73	5.21	13.06	5.25	13.39	5.29	14.06	5.37	14.73	5.45
							44	11.19	5.17	11.83	5.25	12.47	5.33	12.80	5.37	13.13	5.41	13.80	5.49	14.47	5.58
							46	10.93	5.29	11.57	5.37	12.22	5.45	12.54	5.49	12.87	5.53	13.54	5.62	14.22	5.70

12. Capacity Table

12-7. AJ140TXJ5KH/EA

COOLING

Combination (Capacity Index)					Combination (Total)	Combination (%)	Outdoor Temperature (°C,DB)	Indoor Temperature(°C, WB)													
								14		16		18		19		20		22		24	
								TC(kW)	PI(kW)	TC(kW)	PI(kW)	TC(kW)	PI(kW)	TC(kW)	PI(kW)	TC(kW)	PI(kW)	TC(kW)	PI(kW)	TC(kW)	PI(kW)
2000	2500	2500	3500	3500	14000	100%	10	15.74	3.40	16.36	3.47	16.99	3.54	17.30	3.58	17.62	3.61	18.27	3.69	18.93	3.76
							12	15.47	3.49	16.09	3.56	16.72	3.63	17.03	3.67	17.35	3.71	18.00	3.78	18.66	3.85
							14	15.20	3.58	15.82	3.65	16.45	3.73	16.76	3.76	17.09	3.80	17.73	3.87	18.39	3.95
							16	14.92	3.67	15.55	3.75	16.18	3.82	16.50	3.86	16.82	3.90	17.47	3.97	18.13	4.04
							18	14.65	3.77	15.28	3.84	15.91	3.92	16.23	3.96	16.55	3.99	17.20	4.07	17.86	4.14
							20	14.38	3.87	15.01	3.94	15.64	4.02	15.96	4.05	16.28	4.09	16.93	4.17	17.60	4.24
							21	14.25	3.92	14.87	3.99	15.51	4.07	15.83	4.10	16.15	4.14	16.80	4.22	17.46	4.29
							23	13.98	4.02	14.60	4.09	15.24	4.17	15.56	4.21	15.88	4.24	16.54	4.32	17.20	4.40
							25	13.71	4.12	14.34	4.20	14.97	4.27	15.29	4.31	15.62	4.35	16.27	4.42	16.94	4.50
							27	13.44	4.22	14.07	4.30	14.71	4.38	15.03	4.41	15.35	4.45	16.01	4.53	16.68	4.61
							29	13.17	4.33	13.80	4.41	14.44	4.48	14.76	4.52	15.09	4.56	15.75	4.64	16.41	4.71
							31	12.91	4.44	13.54	4.51	14.18	4.59	14.50	4.63	14.83	4.67	15.48	4.75	16.15	4.82
							33	12.64	4.54	13.27	4.62	13.91	4.70	14.24	4.74	14.56	4.78	15.22	4.86	15.89	4.93
							35	12.37	4.65	13.01	4.73	13.65	4.81	14.00	4.84	14.30	4.89	14.96	4.97	15.63	5.05
							37	12.11	4.77	12.74	4.85	13.39	4.92	13.71	4.96	14.04	5.00	14.70	5.08	15.37	5.16
							39	11.85	4.88	12.48	4.96	13.13	5.04	13.45	5.08	13.78	5.12	14.44	5.20	15.12	5.28
							42	11.45	5.05	12.09	5.13	12.73	5.21	13.06	5.25	13.39	5.29	14.06	5.37	14.73	5.45
							44	11.19	5.17	11.83	5.25	12.47	5.33	12.80	5.37	13.13	5.41	13.80	5.49	14.47	5.58
							46	10.93	5.29	11.57	5.37	12.22	5.45	12.54	5.49	12.87	5.53	13.54	5.62	14.22	5.70
2000	2500	2500	3500	5000	15500	111%	10	15.74	3.40	16.36	3.47	16.99	3.54	17.30	3.58	17.62	3.61	18.27	3.69	18.93	3.76
							12	15.47	3.49	16.09	3.56	16.72	3.63	17.03	3.67	17.35	3.71	18.00	3.78	18.66	3.85
							14	15.20	3.58	15.82	3.65	16.45	3.73	16.76	3.76	17.09	3.80	17.73	3.87	18.39	3.95
							16	14.92	3.67	15.55	3.75	16.18	3.82	16.50	3.86	16.82	3.90	17.47	3.97	18.13	4.04
							18	14.65	3.77	15.28	3.84	15.91	3.92	16.23	3.96	16.55	3.99	17.20	4.07	17.86	4.14
							20	14.38	3.87	15.01	3.94	15.64	4.02	15.96	4.05	16.28	4.09	16.93	4.17	17.60	4.24
							21	14.25	3.92	14.87	3.99	15.51	4.07	15.83	4.10	16.15	4.14	16.80	4.22	17.46	4.29
							23	13.98	4.02	14.60	4.09	15.24	4.17	15.56	4.21	15.88	4.24	16.54	4.32	17.20	4.40
							25	13.71	4.12	14.34	4.20	14.97	4.27	15.29	4.31	15.62	4.35	16.27	4.42	16.94	4.50
							27	13.44	4.22	14.07	4.30	14.71	4.38	15.03	4.41	15.35	4.45	16.01	4.53	16.68	4.61
							29	13.17	4.33	13.80	4.41	14.44	4.48	14.76	4.52	15.09	4.56	15.75	4.64	16.41	4.71
							31	12.91	4.44	13.54	4.51	14.18	4.59	14.50	4.63	14.83	4.67	15.48	4.75	16.15	4.82
							33	12.64	4.54	13.27	4.62	13.91	4.70	14.24	4.74	14.56	4.78	15.22	4.86	15.89	4.93
							35	12.37	4.65	13.01	4.73	13.65	4.81	14.00	4.84	14.30	4.89	14.96	4.97	15.63	5.05
							37	12.11	4.77	12.74	4.85	13.39	4.92	13.71	4.96	14.04	5.00	14.70	5.08	15.37	5.16
							39	11.85	4.88	12.48	4.96	13.13	5.04	13.45	5.08	13.78	5.12	14.44	5.20	15.12	5.28
							42	11.45	5.05	12.09	5.13	12.73	5.21	13.06	5.25	13.39	5.29	14.06	5.37	14.73	5.45
							44	11.19	5.17	11.83	5.25	12.47	5.33	12.80	5.37	13.13	5.41	13.80	5.49	14.47	5.58
							46	10.93	5.29	11.57	5.37	12.22	5.45	12.54	5.49	12.87	5.53	13.54	5.62	14.22	5.70

12. Capacity Table

12-7. AJ140TXJ5KH/EA

COOLING

Combination (Capacity Index)					Combination (Total)	Combination (%)	Outdoor Temperature (°C,DB)	Indoor Temperature(°C, WB)													
								14		16		18		19		20		22		24	
								TC(kW)	PI(kW)	TC(kW)	PI(kW)	TC(kW)	PI(kW)	TC(kW)	PI(kW)	TC(kW)	PI(kW)	TC(kW)	PI(kW)	TC(kW)	PI(kW)
2000	2500	2500	3500	6800	17300	124%	10	15.74	3.40	16.36	3.47	16.99	3.54	17.30	3.58	17.62	3.61	18.27	3.69	18.93	3.76
							12	15.47	3.49	16.09	3.56	16.72	3.63	17.03	3.67	17.35	3.71	18.00	3.78	18.66	3.85
							14	15.20	3.58	15.82	3.65	16.45	3.73	16.76	3.76	17.09	3.80	17.73	3.87	18.39	3.95
							16	14.92	3.67	15.55	3.75	16.18	3.82	16.50	3.86	16.82	3.90	17.47	3.97	18.13	4.04
							18	14.65	3.77	15.28	3.84	15.91	3.92	16.23	3.96	16.55	3.99	17.20	4.07	17.86	4.14
							20	14.38	3.87	15.01	3.94	15.64	4.02	15.96	4.05	16.28	4.09	16.93	4.17	17.60	4.24
							21	14.25	3.92	14.87	3.99	15.51	4.07	15.83	4.10	16.15	4.14	16.80	4.22	17.46	4.29
							23	13.98	4.02	14.60	4.09	15.24	4.17	15.56	4.21	15.88	4.24	16.54	4.32	17.20	4.40
							25	13.71	4.12	14.34	4.20	14.97	4.27	15.29	4.31	15.62	4.35	16.27	4.42	16.94	4.50
							27	13.44	4.22	14.07	4.30	14.71	4.38	15.03	4.41	15.35	4.45	16.01	4.53	16.68	4.61
							29	13.17	4.33	13.80	4.41	14.44	4.48	14.76	4.52	15.09	4.56	15.75	4.64	16.41	4.71
							31	12.91	4.44	13.54	4.51	14.18	4.59	14.50	4.63	14.83	4.67	15.48	4.75	16.15	4.82
							33	12.64	4.54	13.27	4.62	13.91	4.70	14.24	4.74	14.56	4.78	15.22	4.86	15.89	4.93
							35	12.37	4.65	13.01	4.73	13.65	4.81	14.00	4.84	14.30	4.89	14.96	4.97	15.63	5.05
							37	12.11	4.77	12.74	4.85	13.39	4.92	13.71	4.96	14.04	5.00	14.70	5.08	15.37	5.16
							39	11.85	4.88	12.48	4.96	13.13	5.04	13.45	5.08	13.78	5.12	14.44	5.20	15.12	5.28
							42	11.45	5.05	12.09	5.13	12.73	5.21	13.06	5.25	13.39	5.29	14.06	5.37	14.73	5.45
							44	11.19	5.17	11.83	5.25	12.47	5.33	12.80	5.37	13.13	5.41	13.80	5.49	14.47	5.58
							46	10.93	5.29	11.57	5.37	12.22	5.45	12.54	5.49	12.87	5.53	13.54	5.62	14.22	5.70
2000	2500	2500	5000	5000	17000	121%	10	15.74	3.40	16.36	3.47	16.99	3.54	17.30	3.58	17.62	3.61	18.27	3.69	18.93	3.76
							12	15.47	3.49	16.09	3.56	16.72	3.63	17.03	3.67	17.35	3.71	18.00	3.78	18.66	3.85
							14	15.20	3.58	15.82	3.65	16.45	3.73	16.76	3.76	17.09	3.80	17.73	3.87	18.39	3.95
							16	14.92	3.67	15.55	3.75	16.18	3.82	16.50	3.86	16.82	3.90	17.47	3.97	18.13	4.04
							18	14.65	3.77	15.28	3.84	15.91	3.92	16.23	3.96	16.55	3.99	17.20	4.07	17.86	4.14
							20	14.38	3.87	15.01	3.94	15.64	4.02	15.96	4.05	16.28	4.09	16.93	4.17	17.60	4.24
							21	14.25	3.92	14.87	3.99	15.51	4.07	15.83	4.10	16.15	4.14	16.80	4.22	17.46	4.29
							23	13.98	4.02	14.60	4.09	15.24	4.17	15.56	4.21	15.88	4.24	16.54	4.32	17.20	4.40
							25	13.71	4.12	14.34	4.20	14.97	4.27	15.29	4.31	15.62	4.35	16.27	4.42	16.94	4.50
							27	13.44	4.22	14.07	4.30	14.71	4.38	15.03	4.41	15.35	4.45	16.01	4.53	16.68	4.61
							29	13.17	4.33	13.80	4.41	14.44	4.48	14.76	4.52	15.09	4.56	15.75	4.64	16.41	4.71
							31	12.91	4.44	13.54	4.51	14.18	4.59	14.50	4.63	14.83	4.67	15.48	4.75	16.15	4.82
							33	12.64	4.54	13.27	4.62	13.91	4.70	14.24	4.74	14.56	4.78	15.22	4.86	15.89	4.93
							35	12.37	4.65	13.01	4.73	13.65	4.81	14.00	4.84	14.30	4.89	14.96	4.97	15.63	5.05
							37	12.11	4.77	12.74	4.85	13.39	4.92	13.71	4.96	14.04	5.00	14.70	5.08	15.37	5.16
							39	11.85	4.88	12.48	4.96	13.13	5.04	13.45	5.08	13.78	5.12	14.44	5.20	15.12	5.28
							42	11.45	5.05	12.09	5.13	12.73	5.21	13.06	5.25	13.39	5.29	14.06	5.37	14.73	5.45
							44	11.19	5.17	11.83	5.25	12.47	5.33	12.80	5.37	13.13	5.41	13.80	5.49	14.47	5.58
							46	10.93	5.29	11.57	5.37	12.22	5.45	12.54	5.49	12.87	5.53	13.54	5.62	14.22	5.70

12. Capacity Table

12-7. AJ140TXJ5KH/EA

COOLING

Combination (Capacity Index)					Combination (Total)	Combination (%)	Outdoor Temperature (°C,DB)	Indoor Temperature(°C, WB)													
								14		16		18		19		20		22		24	
								TC(kW)	PI(kW)	TC(kW)	PI(kW)	TC(kW)	PI(kW)	TC(kW)	PI(kW)	TC(kW)	PI(kW)	TC(kW)	PI(kW)	TC(kW)	PI(kW)
2000	2500	3500	3500	3500	15000	107%	10	15.74	3.40	16.36	3.47	16.99	3.54	17.30	3.58	17.62	3.61	18.27	3.69	18.93	3.76
							12	15.47	3.49	16.09	3.56	16.72	3.63	17.03	3.67	17.35	3.71	18.00	3.78	18.66	3.85
							14	15.20	3.58	15.82	3.65	16.45	3.73	16.76	3.76	17.09	3.80	17.73	3.87	18.39	3.95
							16	14.92	3.67	15.55	3.75	16.18	3.82	16.50	3.86	16.82	3.90	17.47	3.97	18.13	4.04
							18	14.65	3.77	15.28	3.84	15.91	3.92	16.23	3.96	16.55	3.99	17.20	4.07	17.86	4.14
							20	14.38	3.87	15.01	3.94	15.64	4.02	15.96	4.05	16.28	4.09	16.93	4.17	17.60	4.24
							21	14.25	3.92	14.87	3.99	15.51	4.07	15.83	4.10	16.15	4.14	16.80	4.22	17.46	4.29
							23	13.98	4.02	14.60	4.09	15.24	4.17	15.56	4.21	15.88	4.24	16.54	4.32	17.20	4.40
							25	13.71	4.12	14.34	4.20	14.97	4.27	15.29	4.31	15.62	4.35	16.27	4.42	16.94	4.50
							27	13.44	4.22	14.07	4.30	14.71	4.38	15.03	4.41	15.35	4.45	16.01	4.53	16.68	4.61
							29	13.17	4.33	13.80	4.41	14.44	4.48	14.76	4.52	15.09	4.56	15.75	4.64	16.41	4.71
							31	12.91	4.44	13.54	4.51	14.18	4.59	14.50	4.63	14.83	4.67	15.48	4.75	16.15	4.82
							33	12.64	4.54	13.27	4.62	13.91	4.70	14.24	4.74	14.56	4.78	15.22	4.86	15.89	4.93
							35	12.37	4.65	13.01	4.73	13.65	4.81	14.00	4.84	14.30	4.89	14.96	4.97	15.63	5.05
							37	12.11	4.77	12.74	4.85	13.39	4.92	13.71	4.96	14.04	5.00	14.70	5.08	15.37	5.16
							39	11.85	4.88	12.48	4.96	13.13	5.04	13.45	5.08	13.78	5.12	14.44	5.20	15.12	5.28
							42	11.45	5.05	12.09	5.13	12.73	5.21	13.06	5.25	13.39	5.29	14.06	5.37	14.73	5.45
							44	11.19	5.17	11.83	5.25	12.47	5.33	12.80	5.37	13.13	5.41	13.80	5.49	14.47	5.58
							46	10.93	5.29	11.57	5.37	12.22	5.45	12.54	5.49	12.87	5.53	13.54	5.62	14.22	5.70
2000	2500	3500	3500	5000	16500	118%	10	15.74	3.40	16.36	3.47	16.99	3.54	17.30	3.58	17.62	3.61	18.27	3.69	18.93	3.76
							12	15.47	3.49	16.09	3.56	16.72	3.63	17.03	3.67	17.35	3.71	18.00	3.78	18.66	3.85
							14	15.20	3.58	15.82	3.65	16.45	3.73	16.76	3.76	17.09	3.80	17.73	3.87	18.39	3.95
							16	14.92	3.67	15.55	3.75	16.18	3.82	16.50	3.86	16.82	3.90	17.47	3.97	18.13	4.04
							18	14.65	3.77	15.28	3.84	15.91	3.92	16.23	3.96	16.55	3.99	17.20	4.07	17.86	4.14
							20	14.38	3.87	15.01	3.94	15.64	4.02	15.96	4.05	16.28	4.09	16.93	4.17	17.60	4.24
							21	14.25	3.92	14.87	3.99	15.51	4.07	15.83	4.10	16.15	4.14	16.80	4.22	17.46	4.29
							23	13.98	4.02	14.60	4.09	15.24	4.17	15.56	4.21	15.88	4.24	16.54	4.32	17.20	4.40
							25	13.71	4.12	14.34	4.20	14.97	4.27	15.29	4.31	15.62	4.35	16.27	4.42	16.94	4.50
							27	13.44	4.22	14.07	4.30	14.71	4.38	15.03	4.41	15.35	4.45	16.01	4.53	16.68	4.61
							29	13.17	4.33	13.80	4.41	14.44	4.48	14.76	4.52	15.09	4.56	15.75	4.64	16.41	4.71
							31	12.91	4.44	13.54	4.51	14.18	4.59	14.50	4.63	14.83	4.67	15.48	4.75	16.15	4.82
							33	12.64	4.54	13.27	4.62	13.91	4.70	14.24	4.74	14.56	4.78	15.22	4.86	15.89	4.93
							35	12.37	4.65	13.01	4.73	13.65	4.81	14.00	4.84	14.30	4.89	14.96	4.97	15.63	5.05
							37	12.11	4.77	12.74	4.85	13.39	4.92	13.71	4.96	14.04	5.00	14.70	5.08	15.37	5.16
							39	11.85	4.88	12.48	4.96	13.13	5.04	13.45	5.08	13.78	5.12	14.44	5.20	15.12	5.28
							42	11.45	5.05	12.09	5.13	12.73	5.21	13.06	5.25	13.39	5.29	14.06	5.37	14.73	5.45
							44	11.19	5.17	11.83	5.25	12.47	5.33	12.80	5.37	13.13	5.41	13.80	5.49	14.47	5.58
							46	10.93	5.29	11.57	5.37	12.22	5.45	12.54	5.49	12.87	5.53	13.54	5.62	14.22	5.70

12. Capacity Table

12-7. AJ140TXJ5KH/EA

COOLING

Combination (Capacity Index)					Combination (Total)	Combination (%)	Outdoor Temperature (°C,DB)	Indoor Temperature(°C, WB)													
								14		16		18		19		20		22		24	
								TC(kW)	PI(kW)	TC(kW)	PI(kW)	TC(kW)	PI(kW)	TC(kW)	PI(kW)	TC(kW)	PI(kW)	TC(kW)	PI(kW)	TC(kW)	PI(kW)
2000	3500	3500	3500	3500	16000	114%	10	15.74	3.40	16.36	3.47	16.99	3.54	17.30	3.58	17.62	3.61	18.27	3.69	18.93	3.76
							12	15.47	3.49	16.09	3.56	16.72	3.63	17.03	3.67	17.35	3.71	18.00	3.78	18.66	3.85
							14	15.20	3.58	15.82	3.65	16.45	3.73	16.76	3.76	17.09	3.80	17.73	3.87	18.39	3.95
							16	14.92	3.67	15.55	3.75	16.18	3.82	16.50	3.86	16.82	3.90	17.47	3.97	18.13	4.04
							18	14.65	3.77	15.28	3.84	15.91	3.92	16.23	3.96	16.55	3.99	17.20	4.07	17.86	4.14
							20	14.38	3.87	15.01	3.94	15.64	4.02	15.96	4.05	16.28	4.09	16.93	4.17	17.60	4.24
							21	14.25	3.92	14.87	3.99	15.51	4.07	15.83	4.10	16.15	4.14	16.80	4.22	17.46	4.29
							23	13.98	4.02	14.60	4.09	15.24	4.17	15.56	4.21	15.88	4.24	16.54	4.32	17.20	4.40
							25	13.71	4.12	14.34	4.20	14.97	4.27	15.29	4.31	15.62	4.35	16.27	4.42	16.94	4.50
							27	13.44	4.22	14.07	4.30	14.71	4.38	15.03	4.41	15.35	4.45	16.01	4.53	16.68	4.61
							29	13.17	4.33	13.80	4.41	14.44	4.48	14.76	4.52	15.09	4.56	15.75	4.64	16.41	4.71
							31	12.91	4.44	13.54	4.51	14.18	4.59	14.50	4.63	14.83	4.67	15.48	4.75	16.15	4.82
							33	12.64	4.54	13.27	4.62	13.91	4.70	14.24	4.74	14.56	4.78	15.22	4.86	15.89	4.93
							35	12.37	4.65	13.01	4.73	13.65	4.81	14.00	4.84	14.30	4.89	14.96	4.97	15.63	5.05
							37	12.11	4.77	12.74	4.85	13.39	4.92	13.71	4.96	14.04	5.00	14.70	5.08	15.37	5.16
							39	11.85	4.88	12.48	4.96	13.13	5.04	13.45	5.08	13.78	5.12	14.44	5.20	15.12	5.28
							42	11.45	5.05	12.09	5.13	12.73	5.21	13.06	5.25	13.39	5.29	14.06	5.37	14.73	5.45
							44	11.19	5.17	11.83	5.25	12.47	5.33	12.80	5.37	13.13	5.41	13.80	5.49	14.47	5.58
							46	10.93	5.29	11.57	5.37	12.22	5.45	12.54	5.49	12.87	5.53	13.54	5.62	14.22	5.70
2000	3500	3500	3500	5000	17500	125%	10	15.74	3.40	16.36	3.47	16.99	3.54	17.30	3.58	17.62	3.61	18.27	3.69	18.93	3.76
							12	15.47	3.49	16.09	3.56	16.72	3.63	17.03	3.67	17.35	3.71	18.00	3.78	18.66	3.85
							14	15.20	3.58	15.82	3.65	16.45	3.73	16.76	3.76	17.09	3.80	17.73	3.87	18.39	3.95
							16	14.92	3.67	15.55	3.75	16.18	3.82	16.50	3.86	16.82	3.90	17.47	3.97	18.13	4.04
							18	14.65	3.77	15.28	3.84	15.91	3.92	16.23	3.96	16.55	3.99	17.20	4.07	17.86	4.14
							20	14.38	3.87	15.01	3.94	15.64	4.02	15.96	4.05	16.28	4.09	16.93	4.17	17.60	4.24
							21	14.25	3.92	14.87	3.99	15.51	4.07	15.83	4.10	16.15	4.14	16.80	4.22	17.46	4.29
							23	13.98	4.02	14.60	4.09	15.24	4.17	15.56	4.21	15.88	4.24	16.54	4.32	17.20	4.40
							25	13.71	4.12	14.34	4.20	14.97	4.27	15.29	4.31	15.62	4.35	16.27	4.42	16.94	4.50
							27	13.44	4.22	14.07	4.30	14.71	4.38	15.03	4.41	15.35	4.45	16.01	4.53	16.68	4.61
							29	13.17	4.33	13.80	4.41	14.44	4.48	14.76	4.52	15.09	4.56	15.75	4.64	16.41	4.71
							31	12.91	4.44	13.54	4.51	14.18	4.59	14.50	4.63	14.83	4.67	15.48	4.75	16.15	4.82
							33	12.64	4.54	13.27	4.62	13.91	4.70	14.24	4.74	14.56	4.78	15.22	4.86	15.89	4.93
							35	12.37	4.65	13.01	4.73	13.65	4.81	14.00	4.84	14.30	4.89	14.96	4.97	15.63	5.05
							37	12.11	4.77	12.74	4.85	13.39	4.92	13.71	4.96	14.04	5.00	14.70	5.08	15.37	5.16
							39	11.85	4.88	12.48	4.96	13.13	5.04	13.45	5.08	13.78	5.12	14.44	5.20	15.12	5.28
							42	11.45	5.05	12.09	5.13	12.73	5.21	13.06	5.25	13.39	5.29	14.06	5.37	14.73	5.45
							44	11.19	5.17	11.83	5.25	12.47	5.33	12.80	5.37	13.13	5.41	13.80	5.49	14.47	5.58
							46	10.93	5.29	11.57	5.37	12.22	5.45	12.54	5.49	12.87	5.53	13.54	5.62	14.22	5.70

12. Capacity Table

12-7. AJ140TXJ5KH/EA

COOLING

Combination (Capacity Index)					Combination (Total)	Combination (%)	Outdoor Temperature (°C,DB)	Indoor Temperature(°C, WB)													
								14		16		18		19		20		22		24	
								TC(kW)	PI(kW)	TC(kW)	PI(kW)	TC(kW)	PI(kW)	TC(kW)	PI(kW)	TC(kW)	PI(kW)	TC(kW)	PI(kW)	TC(kW)	PI(kW)
2500	2500	2500	2500	2500	12500	89%	10	11.05	2.78	15.58	2.85	15.88	2.91	16.06	2.95	16.25	2.98	16.71	3.04	17.24	3.10
							12	11.05	2.84	15.16	2.91	15.48	2.98	15.66	3.02	15.87	3.05	16.35	3.11	16.90	3.17
							14	11.05	2.92	14.75	2.99	15.09	3.05	15.29	3.09	15.51	3.12	16.01	3.18	16.58	3.24
							16	11.05	2.99	14.36	3.06	14.72	3.13	14.93	3.16	15.16	3.19	15.68	3.25	16.28	3.31
							18	11.05	3.07	13.99	3.14	14.37	3.20	14.59	3.23	14.83	3.27	15.37	3.33	15.99	3.39
							20	11.05	3.14	13.64	3.21	14.04	3.28	14.27	3.31	14.52	3.34	15.08	3.41	15.73	3.47
							21	11.05	3.18	13.47	3.25	13.88	3.32	14.12	3.35	14.37	3.38	14.95	3.45	15.60	3.50
							23	11.05	3.27	13.14	3.33	13.57	3.40	13.82	3.43	14.09	3.46	14.68	3.53	15.36	3.58
							25	11.05	3.35	12.83	3.42	13.28	3.48	13.54	3.51	13.82	3.55	14.44	3.61	15.13	3.67
							27	11.05	3.43	12.53	3.50	13.01	3.57	13.28	3.60	13.57	3.63	14.21	3.69	14.92	3.75
							29	11.05	3.52	12.26	3.59	12.76	3.65	13.04	3.69	13.34	3.72	14.00	3.78	14.73	3.84
							31	11.05	3.61	12.00	3.68	12.52	3.74	12.81	3.78	13.12	3.81	13.80	3.87	14.56	3.92
							33	11.05	3.70	11.76	3.77	12.30	3.83	12.60	3.87	12.92	3.90	13.62	3.96	14.41	4.02
							35	11.05	3.80	11.53	3.86	12.10	3.93	12.50	3.95	12.74	3.99	13.46	4.05	14.27	4.11
							37	11.05	3.89	11.32	3.96	11.91	4.02	12.23	4.05	12.58	4.09	13.32	4.15	14.15	4.20
							39	11.05	3.99	11.14	4.06	11.74	4.12	12.08	4.15	12.43	4.18	13.20	4.24	14.05	4.30
							42	11.05	4.14	10.88	4.21	11.52	4.27	11.87	4.30	12.24	4.33	13.04	4.39	13.92	4.45
							44	11.05	4.24	10.74	4.31	11.40	4.37	11.76	4.40	12.14	4.43	12.96	4.49	13.86	4.55
							46	11.05	4.35	10.61	4.42	11.29	4.48	11.66	4.51	12.06	4.54	12.90	4.60	13.82	4.65
2500	2500	2500	2500	3500	13500	96%	10	15.18	3.11	15.78	3.17	16.38	3.24	16.69	3.27	16.99	3.31	17.62	3.37	18.25	3.44
							12	14.92	3.19	15.51	3.26	16.12	3.32	16.43	3.36	16.73	3.39	17.36	3.46	17.99	3.53
							14	14.65	3.28	15.25	3.34	15.86	3.41	16.17	3.44	16.48	3.48	17.10	3.54	17.74	3.61
							16	14.39	3.36	14.99	3.43	15.60	3.50	15.91	3.53	16.22	3.57	16.84	3.63	17.48	3.70
							18	14.13	3.45	14.73	3.52	15.34	3.59	15.65	3.62	15.96	3.65	16.59	3.72	17.22	3.79
							20	13.87	3.54	14.47	3.61	15.08	3.68	15.39	3.71	15.70	3.75	16.33	3.81	16.97	3.88
							21	13.74	3.59	14.34	3.65	14.95	3.72	15.26	3.76	15.57	3.79	16.20	3.86	16.84	3.93
							23	13.48	3.68	14.08	3.75	14.69	3.82	15.00	3.85	15.32	3.88	15.95	3.95	16.59	4.02
							25	13.22	3.77	13.82	3.84	14.44	3.91	14.75	3.94	15.06	3.98	15.69	4.05	16.33	4.12
							27	12.96	3.87	13.57	3.94	14.18	4.01	14.49	4.04	14.80	4.08	15.44	4.15	16.08	4.22
							29	12.70	3.96	13.31	4.03	13.93	4.10	14.24	4.14	14.55	4.17	15.18	4.24	15.83	4.31
							31	12.45	4.06	13.05	4.13	13.67	4.20	13.98	4.24	14.30	4.27	14.93	4.34	15.58	4.41
							33	12.19	4.16	12.80	4.23	13.42	4.30	13.73	4.34	14.04	4.37	14.68	4.44	15.33	4.52
							35	11.93	4.26	12.54	4.33	13.16	4.40	13.50	4.43	13.79	4.48	14.43	4.55	15.07	4.62
							37	11.68	4.36	12.29	4.43	12.91	4.51	13.22	4.54	13.54	4.58	14.18	4.65	14.83	4.72
							39	11.42	4.47	12.04	4.54	12.66	4.61	12.97	4.65	13.29	4.68	13.93	4.76	14.58	4.83
							42	11.04	4.63	11.66	4.70	12.28	4.77	12.60	4.81	12.91	4.85	13.55	4.92	14.20	4.99
							44	10.79	4.73	11.40	4.81	12.03	4.88	12.34	4.92	12.66	4.96	13.31	5.03	13.96	5.10
							46	10.54	4.84	11.15	4.92	11.78	4.99	12.10	5.03	12.41	5.07	13.06	5.14	13.71	5.21

12. Capacity Table

12-7. AJ140TXJ5KH/EA

COOLING

Combination (Capacity Index)					Combination (Total)	Combination (%)	Outdoor Temperature (°C,DB)	Indoor Temperature(°C, WB)													
								14		16		18		19		20		22		24	
								TC(kW)	PI(kW)	TC(kW)	PI(kW)	TC(kW)	PI(kW)	TC(kW)	PI(kW)	TC(kW)	PI(kW)	TC(kW)	PI(kW)	TC(kW)	PI(kW)
2500	2500	2500	2500	5000	15000	107%	10	15.74	3.40	16.36	3.47	16.99	3.54	17.30	3.58	17.62	3.61	18.27	3.69	18.93	3.76
							12	15.47	3.49	16.09	3.56	16.72	3.63	17.03	3.67	17.35	3.71	18.00	3.78	18.66	3.85
							14	15.20	3.58	15.82	3.65	16.45	3.73	16.76	3.76	17.09	3.80	17.73	3.87	18.39	3.95
							16	14.92	3.67	15.55	3.75	16.18	3.82	16.50	3.86	16.82	3.90	17.47	3.97	18.13	4.04
							18	14.65	3.77	15.28	3.84	15.91	3.92	16.23	3.96	16.55	3.99	17.20	4.07	17.86	4.14
							20	14.38	3.87	15.01	3.94	15.64	4.02	15.96	4.05	16.28	4.09	16.93	4.17	17.60	4.24
							21	14.25	3.92	14.87	3.99	15.51	4.07	15.83	4.10	16.15	4.14	16.80	4.22	17.46	4.29
							23	13.98	4.02	14.60	4.09	15.24	4.17	15.56	4.21	15.88	4.24	16.54	4.32	17.20	4.40
							25	13.71	4.12	14.34	4.20	14.97	4.27	15.29	4.31	15.62	4.35	16.27	4.42	16.94	4.50
							27	13.44	4.22	14.07	4.30	14.71	4.38	15.03	4.41	15.35	4.45	16.01	4.53	16.68	4.61
							29	13.17	4.33	13.80	4.41	14.44	4.48	14.76	4.52	15.09	4.56	15.75	4.64	16.41	4.71
							31	12.91	4.44	13.54	4.51	14.18	4.59	14.50	4.63	14.83	4.67	15.48	4.75	16.15	4.82
							33	12.64	4.54	13.27	4.62	13.91	4.70	14.24	4.74	14.56	4.78	15.22	4.86	15.89	4.93
							35	12.37	4.65	13.01	4.73	13.65	4.81	14.00	4.84	14.30	4.89	14.96	4.97	15.63	5.05
							37	12.11	4.77	12.74	4.85	13.39	4.92	13.71	4.96	14.04	5.00	14.70	5.08	15.37	5.16
							39	11.85	4.88	12.48	4.96	13.13	5.04	13.45	5.08	13.78	5.12	14.44	5.20	15.12	5.28
							42	11.45	5.05	12.09	5.13	12.73	5.21	13.06	5.25	13.39	5.29	14.06	5.37	14.73	5.45
							44	11.19	5.17	11.83	5.25	12.47	5.33	12.80	5.37	13.13	5.41	13.80	5.49	14.47	5.58
							46	10.93	5.29	11.57	5.37	12.22	5.45	12.54	5.49	12.87	5.53	13.54	5.62	14.22	5.70
2500	2500	2500	2500	6800	16800	120%	10	15.74	3.40	16.36	3.47	16.99	3.54	17.30	3.58	17.62	3.61	18.27	3.69	18.93	3.76
							12	15.47	3.49	16.09	3.56	16.72	3.63	17.03	3.67	17.35	3.71	18.00	3.78	18.66	3.85
							14	15.20	3.58	15.82	3.65	16.45	3.73	16.76	3.76	17.09	3.80	17.73	3.87	18.39	3.95
							16	14.92	3.67	15.55	3.75	16.18	3.82	16.50	3.86	16.82	3.90	17.47	3.97	18.13	4.04
							18	14.65	3.77	15.28	3.84	15.91	3.92	16.23	3.96	16.55	3.99	17.20	4.07	17.86	4.14
							20	14.38	3.87	15.01	3.94	15.64	4.02	15.96	4.05	16.28	4.09	16.93	4.17	17.60	4.24
							21	14.25	3.92	14.87	3.99	15.51	4.07	15.83	4.10	16.15	4.14	16.80	4.22	17.46	4.29
							23	13.98	4.02	14.60	4.09	15.24	4.17	15.56	4.21	15.88	4.24	16.54	4.32	17.20	4.40
							25	13.71	4.12	14.34	4.20	14.97	4.27	15.29	4.31	15.62	4.35	16.27	4.42	16.94	4.50
							27	13.44	4.22	14.07	4.30	14.71	4.38	15.03	4.41	15.35	4.45	16.01	4.53	16.68	4.61
							29	13.17	4.33	13.80	4.41	14.44	4.48	14.76	4.52	15.09	4.56	15.75	4.64	16.41	4.71
							31	12.91	4.44	13.54	4.51	14.18	4.59	14.50	4.63	14.83	4.67	15.48	4.75	16.15	4.82
							33	12.64	4.54	13.27	4.62	13.91	4.70	14.24	4.74	14.56	4.78	15.22	4.86	15.89	4.93
							35	12.37	4.65	13.01	4.73	13.65	4.81	14.00	4.84	14.30	4.89	14.96	4.97	15.63	5.05
							37	12.11	4.77	12.74	4.85	13.39	4.92	13.71	4.96	14.04	5.00	14.70	5.08	15.37	5.16
							39	11.85	4.88	12.48	4.96	13.13	5.04	13.45	5.08	13.78	5.12	14.44	5.20	15.12	5.28
							42	11.45	5.05	12.09	5.13	12.73	5.21	13.06	5.25	13.39	5.29	14.06	5.37	14.73	5.45
							44	11.19	5.17	11.83	5.25	12.47	5.33	12.80	5.37	13.13	5.41	13.80	5.49	14.47	5.58
							46	10.93	5.29	11.57	5.37	12.22	5.45	12.54	5.49	12.87	5.53	13.54	5.62	14.22	5.70

12. Capacity Table

12-7. AJ140TXJ5KH/EA

COOLING

Combination (Capacity Index)					Combination (Total)	Combination (%)	Outdoor Temperature (°C,DB)	Indoor Temperature(°C, WB)													
								14		16		18		19		20		22		24	
								TC(kW)	PI(kW)	TC(kW)	PI(kW)	TC(kW)	PI(kW)	TC(kW)	PI(kW)	TC(kW)	PI(kW)	TC(kW)	PI(kW)	TC(kW)	PI(kW)
2500	2500	2500	3500	3500	14500	104%	10	15.74	3.40	16.36	3.47	16.99	3.54	17.30	3.58	17.62	3.61	18.27	3.69	18.93	3.76
							12	15.47	3.49	16.09	3.56	16.72	3.63	17.03	3.67	17.35	3.71	18.00	3.78	18.66	3.85
							14	15.20	3.58	15.82	3.65	16.45	3.73	16.76	3.76	17.09	3.80	17.73	3.87	18.39	3.95
							16	14.92	3.67	15.55	3.75	16.18	3.82	16.50	3.86	16.82	3.90	17.47	3.97	18.13	4.04
							18	14.65	3.77	15.28	3.84	15.91	3.92	16.23	3.96	16.55	3.99	17.20	4.07	17.86	4.14
							20	14.38	3.87	15.01	3.94	15.64	4.02	15.96	4.05	16.28	4.09	16.93	4.17	17.60	4.24
							21	14.25	3.92	14.87	3.99	15.51	4.07	15.83	4.10	16.15	4.14	16.80	4.22	17.46	4.29
							23	13.98	4.02	14.60	4.09	15.24	4.17	15.56	4.21	15.88	4.24	16.54	4.32	17.20	4.40
							25	13.71	4.12	14.34	4.20	14.97	4.27	15.29	4.31	15.62	4.35	16.27	4.42	16.94	4.50
							27	13.44	4.22	14.07	4.30	14.71	4.38	15.03	4.41	15.35	4.45	16.01	4.53	16.68	4.61
							29	13.17	4.33	13.80	4.41	14.44	4.48	14.76	4.52	15.09	4.56	15.75	4.64	16.41	4.71
							31	12.91	4.44	13.54	4.51	14.18	4.59	14.50	4.63	14.83	4.67	15.48	4.75	16.15	4.82
							33	12.64	4.54	13.27	4.62	13.91	4.70	14.24	4.74	14.56	4.78	15.22	4.86	15.89	4.93
							35	12.37	4.65	13.01	4.73	13.65	4.81	14.00	4.84	14.30	4.89	14.96	4.97	15.63	5.05
							37	12.11	4.77	12.74	4.85	13.39	4.92	13.71	4.96	14.04	5.00	14.70	5.08	15.37	5.16
							39	11.85	4.88	12.48	4.96	13.13	5.04	13.45	5.08	13.78	5.12	14.44	5.20	15.12	5.28
							42	11.45	5.05	12.09	5.13	12.73	5.21	13.06	5.25	13.39	5.29	14.06	5.37	14.73	5.45
							44	11.19	5.17	11.83	5.25	12.47	5.33	12.80	5.37	13.13	5.41	13.80	5.49	14.47	5.58
							46	10.93	5.29	11.57	5.37	12.22	5.45	12.54	5.49	12.87	5.53	13.54	5.62	14.22	5.70
2500	2500	2500	3500	5000	16000	114%	10	15.74	3.40	16.36	3.47	16.99	3.54	17.30	3.58	17.62	3.61	18.27	3.69	18.93	3.76
							12	15.47	3.49	16.09	3.56	16.72	3.63	17.03	3.67	17.35	3.71	18.00	3.78	18.66	3.85
							14	15.20	3.58	15.82	3.65	16.45	3.73	16.76	3.76	17.09	3.80	17.73	3.87	18.39	3.95
							16	14.92	3.67	15.55	3.75	16.18	3.82	16.50	3.86	16.82	3.90	17.47	3.97	18.13	4.04
							18	14.65	3.77	15.28	3.84	15.91	3.92	16.23	3.96	16.55	3.99	17.20	4.07	17.86	4.14
							20	14.38	3.87	15.01	3.94	15.64	4.02	15.96	4.05	16.28	4.09	16.93	4.17	17.60	4.24
							21	14.25	3.92	14.87	3.99	15.51	4.07	15.83	4.10	16.15	4.14	16.80	4.22	17.46	4.29
							23	13.98	4.02	14.60	4.09	15.24	4.17	15.56	4.21	15.88	4.24	16.54	4.32	17.20	4.40
							25	13.71	4.12	14.34	4.20	14.97	4.27	15.29	4.31	15.62	4.35	16.27	4.42	16.94	4.50
							27	13.44	4.22	14.07	4.30	14.71	4.38	15.03	4.41	15.35	4.45	16.01	4.53	16.68	4.61
							29	13.17	4.33	13.80	4.41	14.44	4.48	14.76	4.52	15.09	4.56	15.75	4.64	16.41	4.71
							31	12.91	4.44	13.54	4.51	14.18	4.59	14.50	4.63	14.83	4.67	15.48	4.75	16.15	4.82
							33	12.64	4.54	13.27	4.62	13.91	4.70	14.24	4.74	14.56	4.78	15.22	4.86	15.89	4.93
							35	12.37	4.65	13.01	4.73	13.65	4.81	14.00	4.84	14.30	4.89	14.96	4.97	15.63	5.05
							37	12.11	4.77	12.74	4.85	13.39	4.92	13.71	4.96	14.04	5.00	14.70	5.08	15.37	5.16
							39	11.85	4.88	12.48	4.96	13.13	5.04	13.45	5.08	13.78	5.12	14.44	5.20	15.12	5.28
							42	11.45	5.05	12.09	5.13	12.73	5.21	13.06	5.25	13.39	5.29	14.06	5.37	14.73	5.45
							44	11.19	5.17	11.83	5.25	12.47	5.33	12.80	5.37	13.13	5.41	13.80	5.49	14.47	5.58
							46	10.93	5.29	11.57	5.37	12.22	5.45	12.54	5.49	12.87	5.53	13.54	5.62	14.22	5.70

12. Capacity Table

12-7. AJ140TXJ5KH/EA

COOLING

Combination (Capacity Index)					Combination (Total)	Combination (%)	Outdoor Temperature (°C,DB)	Indoor Temperature(°C, WB)													
								14		16		18		19		20		22		24	
								TC(kW)	PI(kW)	TC(kW)	PI(kW)	TC(kW)	PI(kW)	TC(kW)	PI(kW)	TC(kW)	PI(kW)	TC(kW)	PI(kW)	TC(kW)	PI(kW)
2500	2500	2500	5000	5000	17500	125%	10	15.74	3.40	16.36	3.47	16.99	3.54	17.30	3.58	17.62	3.61	18.27	3.69	18.93	3.76
							12	15.47	3.49	16.09	3.56	16.72	3.63	17.03	3.67	17.35	3.71	18.00	3.78	18.66	3.85
							14	15.20	3.58	15.82	3.65	16.45	3.73	16.76	3.76	17.09	3.80	17.73	3.87	18.39	3.95
							16	14.92	3.67	15.55	3.75	16.18	3.82	16.50	3.86	16.82	3.90	17.47	3.97	18.13	4.04
							18	14.65	3.77	15.28	3.84	15.91	3.92	16.23	3.96	16.55	3.99	17.20	4.07	17.86	4.14
							20	14.38	3.87	15.01	3.94	15.64	4.02	15.96	4.05	16.28	4.09	16.93	4.17	17.60	4.24
							21	14.25	3.92	14.87	3.99	15.51	4.07	15.83	4.10	16.15	4.14	16.80	4.22	17.46	4.29
							23	13.98	4.02	14.60	4.09	15.24	4.17	15.56	4.21	15.88	4.24	16.54	4.32	17.20	4.40
							25	13.71	4.12	14.34	4.20	14.97	4.27	15.29	4.31	15.62	4.35	16.27	4.42	16.94	4.50
							27	13.44	4.22	14.07	4.30	14.71	4.38	15.03	4.41	15.35	4.45	16.01	4.53	16.68	4.61
							29	13.17	4.33	13.80	4.41	14.44	4.48	14.76	4.52	15.09	4.56	15.75	4.64	16.41	4.71
							31	12.91	4.44	13.54	4.51	14.18	4.59	14.50	4.63	14.83	4.67	15.48	4.75	16.15	4.82
							33	12.64	4.54	13.27	4.62	13.91	4.70	14.24	4.74	14.56	4.78	15.22	4.86	15.89	4.93
							35	12.37	4.65	13.01	4.73	13.65	4.81	14.00	4.84	14.30	4.89	14.96	4.97	15.63	5.05
							37	12.11	4.77	12.74	4.85	13.39	4.92	13.71	4.96	14.04	5.00	14.70	5.08	15.37	5.16
							39	11.85	4.88	12.48	4.96	13.13	5.04	13.45	5.08	13.78	5.12	14.44	5.20	15.12	5.28
							42	11.45	5.05	12.09	5.13	12.73	5.21	13.06	5.25	13.39	5.29	14.06	5.37	14.73	5.45
							44	11.19	5.17	11.83	5.25	12.47	5.33	12.80	5.37	13.13	5.41	13.80	5.49	14.47	5.58
							46	10.93	5.29	11.57	5.37	12.22	5.45	12.54	5.49	12.87	5.53	13.54	5.62	14.22	5.70
2500	2500	3500	3500	3500	15500	111%	10	15.74	3.40	16.36	3.47	16.99	3.54	17.30	3.58	17.62	3.61	18.27	3.69	18.93	3.76
							12	15.47	3.49	16.09	3.56	16.72	3.63	17.03	3.67	17.35	3.71	18.00	3.78	18.66	3.85
							14	15.20	3.58	15.82	3.65	16.45	3.73	16.76	3.76	17.09	3.80	17.73	3.87	18.39	3.95
							16	14.92	3.67	15.55	3.75	16.18	3.82	16.50	3.86	16.82	3.90	17.47	3.97	18.13	4.04
							18	14.65	3.77	15.28	3.84	15.91	3.92	16.23	3.96	16.55	3.99	17.20	4.07	17.86	4.14
							20	14.38	3.87	15.01	3.94	15.64	4.02	15.96	4.05	16.28	4.09	16.93	4.17	17.60	4.24
							21	14.25	3.92	14.87	3.99	15.51	4.07	15.83	4.10	16.15	4.14	16.80	4.22	17.46	4.29
							23	13.98	4.02	14.60	4.09	15.24	4.17	15.56	4.21	15.88	4.24	16.54	4.32	17.20	4.40
							25	13.71	4.12	14.34	4.20	14.97	4.27	15.29	4.31	15.62	4.35	16.27	4.42	16.94	4.50
							27	13.44	4.22	14.07	4.30	14.71	4.38	15.03	4.41	15.35	4.45	16.01	4.53	16.68	4.61
							29	13.17	4.33	13.80	4.41	14.44	4.48	14.76	4.52	15.09	4.56	15.75	4.64	16.41	4.71
							31	12.91	4.44	13.54	4.51	14.18	4.59	14.50	4.63	14.83	4.67	15.48	4.75	16.15	4.82
							33	12.64	4.54	13.27	4.62	13.91	4.70	14.24	4.74	14.56	4.78	15.22	4.86	15.89	4.93
							35	12.37	4.65	13.01	4.73	13.65	4.81	14.00	4.84	14.30	4.89	14.96	4.97	15.63	5.05
							37	12.11	4.77	12.74	4.85	13.39	4.92	13.71	4.96	14.04	5.00	14.70	5.08	15.37	5.16
							39	11.85	4.88	12.48	4.96	13.13	5.04	13.45	5.08	13.78	5.12	14.44	5.20	15.12	5.28
							42	11.45	5.05	12.09	5.13	12.73	5.21	13.06	5.25	13.39	5.29	14.06	5.37	14.73	5.45
							44	11.19	5.17	11.83	5.25	12.47	5.33	12.80	5.37	13.13	5.41	13.80	5.49	14.47	5.58
							46	10.93	5.29	11.57	5.37	12.22	5.45	12.54	5.49	12.87	5.53	13.54	5.62	14.22	5.70

12. Capacity Table

12-7. AJ140TXJ5KH/EA

COOLING

Combination (Capacity Index)					Combination (Total)	Combination (%)	Outdoor Temperature (°C,DB)	Indoor Temperature(°C, WB)													
								14		16		18		19		20		22		24	
								TC(kW)	PI(kW)	TC(kW)	PI(kW)	TC(kW)	PI(kW)	TC(kW)	PI(kW)	TC(kW)	PI(kW)	TC(kW)	PI(kW)	TC(kW)	PI(kW)
2500	2500	3500	3500	5000	17000	121%	10	15.74	3.40	16.36	3.47	16.99	3.54	17.30	3.58	17.62	3.61	18.27	3.69	18.93	3.76
							12	15.47	3.49	16.09	3.56	16.72	3.63	17.03	3.67	17.35	3.71	18.00	3.78	18.66	3.85
							14	15.20	3.58	15.82	3.65	16.45	3.73	16.76	3.76	17.09	3.80	17.73	3.87	18.39	3.95
							16	14.92	3.67	15.55	3.75	16.18	3.82	16.50	3.86	16.82	3.90	17.47	3.97	18.13	4.04
							18	14.65	3.77	15.28	3.84	15.91	3.92	16.23	3.96	16.55	3.99	17.20	4.07	17.86	4.14
							20	14.38	3.87	15.01	3.94	15.64	4.02	15.96	4.05	16.28	4.09	16.93	4.17	17.60	4.24
							21	14.25	3.92	14.87	3.99	15.51	4.07	15.83	4.10	16.15	4.14	16.80	4.22	17.46	4.29
							23	13.98	4.02	14.60	4.09	15.24	4.17	15.56	4.21	15.88	4.24	16.54	4.32	17.20	4.40
							25	13.71	4.12	14.34	4.20	14.97	4.27	15.29	4.31	15.62	4.35	16.27	4.42	16.94	4.50
							27	13.44	4.22	14.07	4.30	14.71	4.38	15.03	4.41	15.35	4.45	16.01	4.53	16.68	4.61
							29	13.17	4.33	13.80	4.41	14.44	4.48	14.76	4.52	15.09	4.56	15.75	4.64	16.41	4.71
							31	12.91	4.44	13.54	4.51	14.18	4.59	14.50	4.63	14.83	4.67	15.48	4.75	16.15	4.82
							33	12.64	4.54	13.27	4.62	13.91	4.70	14.24	4.74	14.56	4.78	15.22	4.86	15.89	4.93
							35	12.37	4.65	13.01	4.73	13.65	4.81	14.00	4.84	14.30	4.89	14.96	4.97	15.63	5.05
							37	12.11	4.77	12.74	4.85	13.39	4.92	13.71	4.96	14.04	5.00	14.70	5.08	15.37	5.16
							39	11.85	4.88	12.48	4.96	13.13	5.04	13.45	5.08	13.78	5.12	14.44	5.20	15.12	5.28
							42	11.45	5.05	12.09	5.13	12.73	5.21	13.06	5.25	13.39	5.29	14.06	5.37	14.73	5.45
							44	11.19	5.17	11.83	5.25	12.47	5.33	12.80	5.37	13.13	5.41	13.80	5.49	14.47	5.58
							46	10.93	5.29	11.57	5.37	12.22	5.45	12.54	5.49	12.87	5.53	13.54	5.62	14.22	5.70
2500	3500	3500	3500	3500	16500	118%	10	15.74	3.40	16.36	3.47	16.99	3.54	17.30	3.58	17.62	3.61	18.27	3.69	18.93	3.76
							12	15.47	3.49	16.09	3.56	16.72	3.63	17.03	3.67	17.35	3.71	18.00	3.78	18.66	3.85
							14	15.20	3.58	15.82	3.65	16.45	3.73	16.76	3.76	17.09	3.80	17.73	3.87	18.39	3.95
							16	14.92	3.67	15.55	3.75	16.18	3.82	16.50	3.86	16.82	3.90	17.47	3.97	18.13	4.04
							18	14.65	3.77	15.28	3.84	15.91	3.92	16.23	3.96	16.55	3.99	17.20	4.07	17.86	4.14
							20	14.38	3.87	15.01	3.94	15.64	4.02	15.96	4.05	16.28	4.09	16.93	4.17	17.60	4.24
							21	14.25	3.92	14.87	3.99	15.51	4.07	15.83	4.10	16.15	4.14	16.80	4.22	17.46	4.29
							23	13.98	4.02	14.60	4.09	15.24	4.17	15.56	4.21	15.88	4.24	16.54	4.32	17.20	4.40
							25	13.71	4.12	14.34	4.20	14.97	4.27	15.29	4.31	15.62	4.35	16.27	4.42	16.94	4.50
							27	13.44	4.22	14.07	4.30	14.71	4.38	15.03	4.41	15.35	4.45	16.01	4.53	16.68	4.61
							29	13.17	4.33	13.80	4.41	14.44	4.48	14.76	4.52	15.09	4.56	15.75	4.64	16.41	4.71
							31	12.91	4.44	13.54	4.51	14.18	4.59	14.50	4.63	14.83	4.67	15.48	4.75	16.15	4.82
							33	12.64	4.54	13.27	4.62	13.91	4.70	14.24	4.74	14.56	4.78	15.22	4.86	15.89	4.93
							35	12.37	4.65	13.01	4.73	13.65	4.81	14.00	4.84	14.30	4.89	14.96	4.97	15.63	5.05
							37	12.11	4.77	12.74	4.85	13.39	4.92	13.71	4.96	14.04	5.00	14.70	5.08	15.37	5.16
							39	11.85	4.88	12.48	4.96	13.13	5.04	13.45	5.08	13.78	5.12	14.44	5.20	15.12	5.28
							42	11.45	5.05	12.09	5.13	12.73	5.21	13.06	5.25	13.39	5.29	14.06	5.37	14.73	5.45
							44	11.19	5.17	11.83	5.25	12.47	5.33	12.80	5.37	13.13	5.41	13.80	5.49	14.47	5.58
							46	10.93	5.29	11.57	5.37	12.22	5.45	12.54	5.49	12.87	5.53	13.54	5.62	14.22	5.70

12. Capacity Table

12-7. AJ140TXJ5KH/EA

COOLING

Combination (Capacity Index)					Combination (Total)	Combination (%)	Outdoor Temperature (°C,DB)	Indoor Temperature(°C, WB)													
								14		16		18		19		20		22		24	
								TC(kW)	PI(kW)	TC(kW)	PI(kW)	TC(kW)	PI(kW)	TC(kW)	PI(kW)	TC(kW)	PI(kW)	TC(kW)	PI(kW)	TC(kW)	PI(kW)
3500	3500	3500	3500	3500	17500	125%	10	15.74	3.40	16.36	3.47	16.99	3.54	17.30	3.58	17.62	3.61	18.27	3.69	18.93	3.76
							12	15.47	3.49	16.09	3.56	16.72	3.63	17.03	3.67	17.35	3.71	18.00	3.78	18.66	3.85
							14	15.20	3.58	15.82	3.65	16.45	3.73	16.76	3.76	17.09	3.80	17.73	3.87	18.39	3.95
							16	14.92	3.67	15.55	3.75	16.18	3.82	16.50	3.86	16.82	3.90	17.47	3.97	18.13	4.04
							18	14.65	3.77	15.28	3.84	15.91	3.92	16.23	3.96	16.55	3.99	17.20	4.07	17.86	4.14
							20	14.38	3.87	15.01	3.94	15.64	4.02	15.96	4.05	16.28	4.09	16.93	4.17	17.60	4.24
							21	14.25	3.92	14.87	3.99	15.51	4.07	15.83	4.10	16.15	4.14	16.80	4.22	17.46	4.29
							23	13.98	4.02	14.60	4.09	15.24	4.17	15.56	4.21	15.88	4.24	16.54	4.32	17.20	4.40
							25	13.71	4.12	14.34	4.20	14.97	4.27	15.29	4.31	15.62	4.35	16.27	4.42	16.94	4.50
							27	13.44	4.22	14.07	4.30	14.71	4.38	15.03	4.41	15.35	4.45	16.01	4.53	16.68	4.61
							29	13.17	4.33	13.80	4.41	14.44	4.48	14.76	4.52	15.09	4.56	15.75	4.64	16.41	4.71
							31	12.91	4.44	13.54	4.51	14.18	4.59	14.50	4.63	14.83	4.67	15.48	4.75	16.15	4.82
							33	12.64	4.54	13.27	4.62	13.91	4.70	14.24	4.74	14.56	4.78	15.22	4.86	15.89	4.93
							35	12.37	4.65	13.01	4.73	13.65	4.81	14.00	4.84	14.30	4.89	14.96	4.97	15.63	5.05
							37	12.11	4.77	12.74	4.85	13.39	4.92	13.71	4.96	14.04	5.00	14.70	5.08	15.37	5.16
							39	11.85	4.88	12.48	4.96	13.13	5.04	13.45	5.08	13.78	5.12	14.44	5.20	15.12	5.28
							42	11.45	5.05	12.09	5.13	12.73	5.21	13.06	5.25	13.39	5.29	14.06	5.37	14.73	5.45
							44	11.19	5.17	11.83	5.25	12.47	5.33	12.80	5.37	13.13	5.41	13.80	5.49	14.47	5.58
							46	10.93	5.29	11.57	5.37	12.22	5.45	12.54	5.49	12.87	5.53	13.54	5.62	14.22	5.70

NOTE

1 Cooling capacity is based on 27°CDB / 19°CWB (indoor temperature), 35°CDB (outdoor temperature).

2 Heating capacity is based on 20°CDB (indoor temperature), 7°CDB/6°CWB (outdoor temperature).

3 The above is the value for connecting with the following indoor units.
- AJ***TNAPKH : Premium Wind Free

4 Capacities are based on the following conditions:
- Corresponding refrigerant piping length : 7.5m / - Level difference : 0m

5 The total ability of connected a indoor unit is up to 17.5kW

6 It is impossible to connect the indoor unit for one room only.

7 This data is reference data for temperature capacity trend.

12. Capacity Table

12-7. AJ140TXJ5KH/EA

HEATING

Combination (Capacity Index)					Combination (Total)	Combination (%)	Outdoor Temperature (°F,DB)	Indoor Temperature (°F, DB)											
								57.2		60.8		64.4		69.98		71.6		75.2	
								TC(kbtu)	PI(kW)	TC(kbtu)	PI(kW)	TC(kbtu)	PI(kW)	TC(kbtu)	PI(kW)	TC(kbtu)	PI(kW)	TC(kbtu)	PI(kW)
2000					2000	14%	-15	1.26	0.91	1.22	0.93	1.18	0.94	1.17	0.95	1.13	0.96	1.11	0.97
							-10	1.51	0.96	1.47	0.98	1.43	0.99	1.41	1.00	1.37	1.01	1.34	1.02
							-5	1.76	1.01	1.71	1.02	1.67	1.04	1.66	1.04	1.61	1.06	1.58	1.07
							0	2.01	1.06	1.96	1.07	1.92	1.09	1.90	1.09	1.85	1.11	1.82	1.12
							2	2.11	1.08	2.06	1.09	2.02	1.11	2.00	1.11	1.95	1.13	1.92	1.14
							7	2.31	1.11	2.26	1.13	2.21	1.14	2.20	1.15	2.14	1.17	2.11	1.18
							10	2.51	1.15	2.46	1.17	2.41	1.18	2.39	1.19	2.33	1.21	2.30	1.22
							15	2.76	1.20	2.71	1.21	2.66	1.23	2.64	1.24	2.57	1.26	2.54	1.27
2500					2500	18%	-15	1.83	1.12	1.77	1.14	1.72	1.15	1.70	1.16	1.64	1.18	1.61	1.19
							-10	2.19	1.18	2.13	1.20	2.08	1.21	2.05	1.22	1.99	1.24	1.95	1.25
							-5	2.56	1.24	2.49	1.26	2.44	1.27	2.41	1.28	2.34	1.30	2.30	1.31
							0	2.92	1.30	2.85	1.31	2.79	1.33	2.76	1.34	2.69	1.36	2.65	1.37
							2	3.07	1.32	3.00	1.34	2.94	1.36	2.91	1.36	2.83	1.39	2.79	1.40
							7	3.36	1.36	3.29	1.38	3.22	1.40	3.20	1.41	3.11	1.44	3.07	1.45
							10	3.65	1.41	3.58	1.43	3.51	1.45	3.48	1.46	3.39	1.48	3.34	1.50
							15	4.02	1.47	3.94	1.49	3.87	1.51	3.83	1.52	3.74	1.54	3.69	1.56
3500					3500	25%	-15	2.29	1.32	2.22	1.34	2.15	1.36	2.13	1.36	2.05	1.39	2.01	1.40
							-10	2.74	1.39	2.67	1.41	2.60	1.43	2.57	1.44	2.49	1.46	2.44	1.47
							-5	3.20	1.46	3.12	1.48	3.04	1.50	3.01	1.51	2.92	1.53	2.88	1.54
							0	3.65	1.53	3.57	1.55	3.49	1.57	3.46	1.58	3.36	1.60	3.31	1.62
							2	3.83	1.55	3.75	1.58	3.67	1.60	3.63	1.61	3.54	1.63	3.48	1.65
							7	4.20	1.61	4.11	1.63	4.03	1.65	4.00	1.66	3.89	1.69	3.83	1.71
							10	4.56	1.66	4.47	1.68	4.38	1.71	4.35	1.72	4.24	1.75	4.18	1.76
							15	5.02	1.73	4.92	1.75	4.83	1.78	4.79	1.79	4.68	1.82	4.62	1.84
5000					5000	36%	-15	3.43	1.73	3.33	1.76	3.23	1.78	3.19	1.79	3.08	1.82	3.02	1.83
							-10	4.11	1.82	4.00	1.85	3.90	1.88	3.85	1.89	3.73	1.92	3.67	1.93
							-5	4.80	1.91	4.67	1.94	4.57	1.97	4.52	1.98	4.39	2.01	4.31	2.03
							0	5.48	2.00	5.35	2.03	5.24	2.06	5.18	2.07	5.04	2.11	4.97	2.12
							2	5.75	2.04	5.62	2.07	5.50	2.10	5.45	2.11	5.31	2.14	5.23	2.16
							7	6.30	2.11	6.16	2.14	6.04	2.17	6.00	2.18	5.83	2.22	5.75	2.24
							10	6.84	2.18	6.70	2.21	6.58	2.24	6.52	2.26	6.36	2.29	6.27	2.32
							15	7.53	2.27	7.38	2.30	7.25	2.33	7.19	2.35	7.02	2.39	6.92	2.41
6800					6800	49%	-15	4.58	2.54	4.44	2.58	4.31	2.62	4.25	2.63	4.10	2.67	4.02	2.69
							-10	5.49	2.68	5.33	2.72	5.20	2.75	5.14	2.77	4.97	2.81	4.89	2.84
							-5	6.39	2.81	6.23	2.85	6.09	2.89	6.02	2.91	5.85	2.95	5.75	2.98
							0	7.30	2.94	7.13	2.98	6.98	3.02	6.91	3.04	6.72	3.09	6.62	3.12
							2	7.67	2.99	7.49	3.04	7.34	3.08	7.27	3.10	7.07	3.15	6.97	3.18
							7	8.40	3.10	8.22	3.14	8.05	3.19	8.00	3.20	7.78	3.26	7.66	3.29
							10	9.12	3.20	8.94	3.25	8.77	3.29	8.69	3.31	8.48	3.37	8.36	3.40
							15	10.04	3.33	9.84	3.38	9.67	3.42	9.58	3.45	9.36	3.50	9.23	3.54
2000	2000				4000	29%	-15	2.52	1.11	2.44	1.13	2.37	1.14	2.34	1.15	2.26	1.17	2.21	1.18
							-10	3.02	1.17	2.93	1.19	2.86	1.20	2.82	1.21	2.74	1.23	2.69	1.24
							-5	3.52	1.23	3.43	1.25	3.35	1.26	3.31	1.27	3.22	1.29	3.16	1.30
							0	4.02	1.29	3.92	1.31	3.84	1.32	3.80	1.33	3.70	1.35	3.64	1.36
							2	4.22	1.31	4.12	1.33	4.04	1.35	4.00	1.35	3.89	1.38	3.83	1.39
							7	4.62	1.35	4.52	1.37	4.43	1.39	4.40	1.40	4.28	1.43	4.21	1.44
							10	5.02	1.40	4.92	1.42	4.82	1.44	4.78	1.45	4.66	1.47	4.60	1.49
								5.52	1.46	5.41	1.48	5.32	1.50	5.27	1.51	5.15	1.53	5.08	1.55

12. Capacity Table

12-7. AJ140TXJ5KH/EA

HEATING

Combination (Capacity Index)					Combination (Total)	Combination (%)	Outdoor Temperature (°F,DB)	Indoor Temperature (°F, DB)											
								57.2		60.8		64.4		69.98		71.6		75.2	
								TC(kbtu)	PI(kW)	TC(kbtu)	PI(kW)	TC(kbtu)	PI(kW)	TC(kbtu)	PI(kW)	TC(kbtu)	PI(kW)	TC(kbtu)	PI(kW)
2000	2500				4500	32%	-15	3.09	1.34	2.99	1.36	2.90	1.38	2.86	1.39	2.76	1.41	2.71	1.42
							-10	3.70	1.41	3.59	1.43	3.50	1.45	3.46	1.46	3.35	1.49	3.29	1.50
							-5	4.31	1.48	4.20	1.51	4.10	1.53	4.06	1.53	3.94	1.56	3.88	1.57
							0	4.92	1.55	4.81	1.58	4.70	1.60	4.66	1.61	4.53	1.63	4.46	1.65
							2	5.17	1.58	5.05	1.60	4.94	1.63	4.90	1.64	4.77	1.66	4.69	1.68
							7	5.66	1.64	5.54	1.66	5.43	1.68	5.39	1.69	5.24	1.72	5.16	1.74
							10	6.15	1.69	6.02	1.72	5.91	1.74	5.86	1.75	5.71	1.78	5.63	1.80
							15	6.76	1.76	6.63	1.78	6.51	1.81	6.46	1.82	6.31	1.85	6.22	1.87
2000	3500				5500	39%	-15	3.61	1.47	3.49	1.49	3.39	1.51	3.35	1.52	3.23	1.54	3.17	1.56
							-10	4.32	1.55	4.20	1.57	4.09	1.59	4.04	1.60	3.92	1.63	3.85	1.64
							-5	5.03	1.62	4.91	1.65	4.79	1.67	4.74	1.68	4.61	1.71	4.53	1.72
							0	5.75	1.70	5.62	1.73	5.50	1.75	5.44	1.76	5.30	1.79	5.21	1.80
							2	6.04	1.73	5.90	1.76	5.78	1.78	5.72	1.79	5.57	1.82	5.49	1.84
							7	6.61	1.79	6.47	1.82	6.34	1.84	6.30	1.85	6.12	1.88	6.03	1.90
							10	7.19	1.85	7.04	1.88	6.91	1.90	6.84	1.91	6.68	1.95	6.58	1.97
							15	7.91	1.92	7.75	1.95	7.61	1.98	7.55	1.99	7.37	2.03	7.27	2.05
2000	5000				7000	50%	-15	4.61	2.03	4.47	2.06	4.34	2.08	4.28	2.10	4.13	2.13	4.05	2.15
							-10	5.53	2.13	5.37	2.17	5.24	2.19	5.17	2.21	5.01	2.24	4.92	2.26
							-5	6.44	2.24	6.28	2.27	6.13	2.30	6.07	2.32	5.89	2.35	5.80	2.37
							0	7.36	2.34	7.19	2.38	7.03	2.41	6.96	2.42	6.77	2.46	6.67	2.49
							2	7.72	2.38	7.55	2.42	7.39	2.45	7.32	2.47	7.13	2.51	7.02	2.53
							7	8.46	2.47	8.28	2.50	8.11	2.54	8.06	2.55	7.84	2.60	7.72	2.62
							10	9.19	2.55	9.01	2.59	8.84	2.62	8.76	2.64	8.54	2.68	8.42	2.71
							15	10.11	2.65	9.92	2.69	9.74	2.73	9.66	2.75	9.43	2.79	9.30	2.82
2000	6800				8800	63%	-15	5.54	2.42	5.36	2.46	5.21	2.49	5.14	2.51	4.96	2.55	4.86	2.57
							-10	6.63	2.55	6.45	2.59	6.28	2.62	6.21	2.64	6.01	2.68	5.91	2.70
							-5	7.73	2.68	7.53	2.72	7.36	2.75	7.28	2.77	7.07	2.81	6.95	2.84
							0	8.83	2.80	8.62	2.84	8.44	2.88	8.35	2.90	8.13	2.95	8.00	2.97
							2	9.27	2.85	9.06	2.89	8.87	2.93	8.78	2.95	8.55	3.00	8.42	3.03
							7	10.15	2.95	9.93	3.00	9.73	3.04	9.67	3.05	9.40	3.10	9.26	3.13
							10	11.03	3.05	10.81	3.10	10.60	3.14	10.51	3.16	10.25	3.21	10.10	3.24
							15	12.13	3.17	11.90	3.22	11.68	3.26	11.58	3.28	11.31	3.34	11.16	3.37
2500	2500				5000	36%	-15	3.66	1.50	3.54	1.52	3.44	1.54	3.40	1.55	3.28	1.58	3.21	1.59
							-10	4.38	1.58	4.26	1.60	4.15	1.63	4.10	1.64	3.97	1.66	3.90	1.67
							-5	5.11	1.66	4.98	1.68	4.86	1.71	4.81	1.72	4.67	1.74	4.60	1.76
							0	5.83	1.74	5.70	1.76	5.58	1.79	5.52	1.80	5.37	1.83	5.29	1.84
							2	6.12	1.77	5.99	1.79	5.86	1.82	5.80	1.83	5.65	1.86	5.57	1.88
							7	6.71	1.83	6.56	1.86	6.43	1.88	6.39	1.89	6.21	1.92	6.12	1.94
							10	7.29	1.89	7.14	1.92	7.01	1.94	6.94	1.96	6.77	1.99	6.68	2.01
							15	8.02	1.97	7.86	2.00	7.72	2.02	7.66	2.03	7.48	2.07	7.37	2.09
2500	3500				6000	43%	-15	4.18	1.64	4.05	1.66	3.93	1.68	3.88	1.69	3.74	1.72	3.67	1.73
							-10	5.01	1.72	4.87	1.75	4.74	1.77	4.69	1.78	4.54	1.81	4.46	1.83
							-5	5.83	1.81	5.69	1.84	5.56	1.86	5.50	1.87	5.34	1.90	5.25	1.92
							0	6.66	1.89	6.51	1.92	6.37	1.95	6.31	1.96	6.14	1.99	6.04	2.01
							2	7.00	1.93	6.84	1.96	6.70	1.98	6.63	1.99	6.46	2.03	6.36	2.04
							7	7.66	1.99	7.50	2.02	7.35	2.05	7.30	2.06	7.10	2.10	6.99	2.12
							10	8.33	2.06	8.16	2.09	8.00	2.12	7.93	2.13	7.74	2.17	7.63	2.19
							15	9.16	2.14	8.98	2.17	8.82	2.20	8.75	2.22	8.54	2.26	8.42	2.28

12. Capacity Table

12-7. AJ140TXJ5KH/EA

HEATING

Combination (Capacity Index)					Combination (Total)	Combination (%)	Outdoor Temperature (°F,DB)	Indoor Temperature (°F, DB)											
								57.2		60.8		64.4		69.98		71.6		75.2	
								TC(kbtu)	PI(kW)	TC(kbtu)	PI(kW)	TC(kbtu)	PI(kW)	TC(kbtu)	PI(kW)	TC(kbtu)	PI(kW)	TC(kbtu)	PI(kW)
2500	5000				7500	54%	-15	5.19	2.19	5.02	2.23	4.88	2.26	4.81	2.27	4.65	2.30	4.56	2.32
							-10	6.21	2.31	6.04	2.34	5.89	2.37	5.82	2.39	5.63	2.43	5.54	2.45
							-5	7.24	2.42	7.06	2.46	6.90	2.49	6.82	2.51	6.62	2.55	6.52	2.57
							0	8.27	2.54	8.08	2.57	7.91	2.61	7.83	2.62	7.62	2.67	7.50	2.69
							2	8.68	2.58	8.49	2.62	8.31	2.65	8.23	2.67	8.01	2.71	7.89	2.74
							7	9.51	2.67	9.30	2.71	9.12	2.75	9.06	2.76	8.81	2.81	8.68	2.84
							10	10.33	2.76	10.12	2.80	9.93	2.84	9.84	2.86	9.60	2.90	9.47	2.93
							15	11.37	2.87	11.15	2.91	10.95	2.95	10.85	2.97	10.60	3.02	10.45	3.05
2500	6800				9300	66%	-15	6.11	2.59	5.92	2.63	5.75	2.66	5.67	2.68	5.47	2.72	5.37	2.74
							-10	7.32	2.73	7.11	2.77	6.93	2.80	6.85	2.82	6.64	2.86	6.52	2.89
							-5	8.53	2.86	8.31	2.90	8.12	2.94	8.03	2.96	7.80	3.01	7.67	3.03
							0	9.74	3.00	9.51	3.04	9.31	3.08	9.22	3.10	8.97	3.15	8.83	3.18
							2	10.23	3.05	10.00	3.09	9.79	3.14	9.69	3.15	9.44	3.21	9.29	3.24
							7	11.20	3.15	10.96	3.20	10.74	3.24	10.67	3.26	10.37	3.32	10.22	3.35
							10	12.17	3.26	11.92	3.31	11.70	3.35	11.59	3.37	11.31	3.43	11.15	3.46
							15	13.39	3.39	13.13	3.44	12.89	3.49	12.78	3.51	12.48	3.57	12.31	3.60
3500	3500				7000	50%	-15	4.70	1.76	4.55	1.79	4.42	1.81	4.36	1.83	4.21	1.85	4.13	1.87
							-10	5.63	1.86	5.47	1.88	5.33	1.91	5.27	1.92	5.11	1.95	5.02	1.97
							-5	6.56	1.95	6.40	1.98	6.25	2.00	6.18	2.02	6.00	2.05	5.90	2.07
							0	7.49	2.04	7.32	2.07	7.16	2.10	7.09	2.11	6.90	2.14	6.79	2.16
							2	7.87	2.08	7.69	2.11	7.53	2.14	7.46	2.15	7.26	2.18	7.15	2.20
							7	8.62	2.15	8.43	2.18	8.27	2.21	8.21	2.22	7.98	2.26	7.86	2.28
							10	9.36	2.22	9.17	2.25	9.00	2.28	8.92	2.30	8.70	2.34	8.58	2.36
							15	10.30	2.31	10.10	2.34	9.92	2.38	9.84	2.39	9.61	2.43	9.47	2.45
3500	5000				8500	61%	-15	5.70	2.38	5.52	2.41	5.36	2.44	5.29	2.46	5.11	2.50	5.01	2.52
							-10	6.83	2.50	6.64	2.54	6.47	2.57	6.39	2.59	6.19	2.63	6.08	2.65
							-5	7.96	2.62	7.76	2.66	7.58	2.70	7.50	2.72	7.28	2.76	7.16	2.78
							0	9.09	2.75	8.88	2.79	8.69	2.83	8.60	2.84	8.37	2.89	8.24	2.91
							2	9.54	2.80	9.33	2.84	9.14	2.88	9.05	2.89	8.81	2.94	8.67	2.97
							7	10.45	2.89	10.23	2.94	10.03	2.98	9.96	2.99	9.68	3.04	9.54	3.07
							10	11.36	2.99	11.13	3.03	10.92	3.08	10.82	3.09	10.56	3.15	10.41	3.18
							15	12.50	3.11	12.26	3.16	12.04	3.20	11.93	3.22	11.65	3.27	11.49	3.31
3500	6800				10300	74%	-15	6.63	2.73	6.42	2.77	6.24	2.80	6.15	2.82	5.94	2.86	5.82	2.89
							-10	7.94	2.87	7.72	2.91	7.52	2.95	7.43	2.97	7.20	3.01	7.07	3.04
							-5	9.25	3.01	9.02	3.06	8.81	3.10	8.72	3.12	8.47	3.16	8.33	3.19
							0	10.57	3.15	10.33	3.20	10.10	3.24	10.00	3.26	9.73	3.31	9.58	3.34
							2	11.10	3.21	10.85	3.26	10.62	3.30	10.52	3.32	10.24	3.37	10.09	3.40
							7	12.15	3.32	11.89	3.37	11.66	3.41	11.58	3.43	11.26	3.49	11.09	3.52
							10	13.21	3.43	12.94	3.48	12.69	3.53	12.58	3.55	12.27	3.61	12.10	3.64
							15	14.53	3.57	14.25	3.62	13.99	3.67	13.87	3.69	13.55	3.76	13.36	3.79
5000	5000				10000	71%	-15	6.71	2.73	6.50	2.78	6.31	2.81	6.23	2.83	6.01	2.87	5.89	2.89
							-10	8.04	2.88	7.81	2.92	7.61	2.96	7.52	2.98	7.29	3.02	7.16	3.05
							-5	9.37	3.02	9.13	3.06	8.92	3.11	8.82	3.12	8.57	3.17	8.43	3.20
							0	10.70	3.16	10.45	3.21	10.23	3.25	10.12	3.27	9.85	3.32	9.70	3.35
							2	11.23	3.22	10.98	3.27	10.75	3.31	10.65	3.33	10.36	3.38	10.21	3.41
							7	12.30	3.33	12.04	3.38	11.80	3.42	11.72	3.44	11.39	3.50	11.23	3.53
							10	13.37	3.44	13.10	3.49	12.85	3.54	12.73	3.56	12.42	3.62	12.25	3.65
							15	14.71	3.58	14.42	3.63	14.16	3.68	14.04	3.70	13.71	3.77	13.52	3.80

12. Capacity Table

12-7. AJ140TXJ5KH/EA

HEATING

Combination (Capacity Index)					Combination (Total)	Combination (%)	Outdoor Temperature (°F,DB)	Indoor Temperature (°F, DB)											
								57.2		60.8		64.4		69.98		71.6		75.2	
								TC(kbtu)	PI(kW)	TC(kbtu)	PI(kW)	TC(kbtu)	PI(kW)	TC(kbtu)	PI(kW)	TC(kbtu)	PI(kW)	TC(kbtu)	PI(kW)
5000	6800				11800	84%	-15	6.86	2.69	6.65	2.73	6.46	2.76	6.37	2.78	6.15	2.82	6.03	2.84
							-10	8.22	2.83	7.99	2.87	7.79	2.91	7.70	2.92	7.46	2.97	7.33	2.99
							-5	9.58	2.97	9.34	3.01	9.13	3.05	9.03	3.07	8.77	3.12	8.62	3.15
							0	10.94	3.11	10.69	3.15	10.46	3.19	10.36	3.21	10.08	3.27	9.92	3.29
							2	11.49	3.16	11.23	3.21	11.00	3.25	10.89	3.27	10.60	3.32	10.44	3.35
							7	12.58	3.27	12.31	3.32	12.07	3.36	11.99	3.38	11.66	3.44	11.48	3.47
							10	13.68	3.38	13.40	3.43	13.14	3.48	13.03	3.50	12.71	3.56	12.53	3.59
							15	15.05	3.52	14.75	3.57	14.49	3.62	14.36	3.64	14.03	3.70	13.83	3.74
6800	6800				13600	97%	-15	7.44	2.71	7.21	2.75	7.00	2.79	6.91	2.80	6.67	2.85	6.54	2.87
							-10	8.91	2.85	8.67	2.90	8.45	2.93	8.35	2.95	8.08	3.00	7.94	3.02
							-5	10.39	2.99	10.13	3.04	9.89	3.08	9.79	3.10	9.50	3.15	9.35	3.17
							0	11.87	3.13	11.59	3.18	11.34	3.22	11.23	3.24	10.93	3.29	10.76	3.32
							2	12.46	3.19	12.18	3.24	11.92	3.28	11.81	3.30	11.50	3.35	11.32	3.38
							7	13.64	3.30	13.35	3.35	13.09	3.39	13.00	3.41	12.64	3.47	12.45	3.50
							10	14.83	3.41	14.53	3.46	14.25	3.51	14.12	3.53	13.78	3.59	13.58	3.62
							15	16.31	3.55	16.00	3.60	15.71	3.65	15.57	3.67	15.21	3.73	15.00	3.77
2000	2000	2000			6000	43%	-15	3.69	1.61	3.58	1.64	3.47	1.66	3.43	1.67	3.31	1.69	3.24	1.71
							-10	4.42	1.70	4.30	1.72	4.19	1.75	4.14	1.76	4.01	1.78	3.94	1.80
							-5	5.15	1.78	5.03	1.81	4.91	1.83	4.86	1.84	4.72	1.87	4.64	1.89
							0	5.89	1.87	5.75	1.89	5.63	1.92	5.57	1.93	5.42	1.96	5.34	1.98
							2	6.18	1.90	6.04	1.93	5.92	1.95	5.86	1.96	5.70	2.00	5.62	2.01
							7	6.77	1.96	6.62	1.99	6.49	2.02	6.45	2.03	6.27	2.07	6.18	2.09
							10	7.36	2.03	7.21	2.06	7.07	2.09	7.01	2.10	6.84	2.14	6.74	2.16
							15	8.09	2.11	7.94	2.14	7.79	2.17	7.73	2.19	7.55	2.22	7.44	2.24
2000	2000	2500			6500	46%	-15	4.13	1.78	4.00	1.81	3.88	1.83	3.83	1.84	3.70	1.87	3.63	1.88
							-10	4.94	1.87	4.81	1.90	4.68	1.93	4.63	1.94	4.48	1.97	4.40	1.98
							-5	5.76	1.97	5.62	2.00	5.49	2.02	5.43	2.03	5.27	2.07	5.19	2.08
							0	6.58	2.06	6.43	2.09	6.29	2.12	6.23	2.13	6.06	2.16	5.97	2.18
							2	6.91	2.09	6.75	2.13	6.61	2.15	6.55	2.17	6.38	2.20	6.28	2.22
							7	7.57	2.17	7.40	2.20	7.26	2.23	7.21	2.24	7.01	2.28	6.91	2.30
							10	8.22	2.24	8.06	2.27	7.90	2.30	7.83	2.32	7.64	2.36	7.53	2.38
							15	9.05	2.33	8.87	2.36	8.71	2.40	8.64	2.41	8.44	2.45	8.32	2.48
2000	2000	3500			7500	54%	-15	4.90	2.07	4.75	2.10	4.61	2.12	4.55	2.14	4.39	2.17	4.30	2.19
							-10	5.87	2.18	5.71	2.21	5.56	2.24	5.50	2.25	5.32	2.28	5.23	2.30
							-5	6.84	2.28	6.67	2.32	6.51	2.35	6.44	2.36	6.26	2.40	6.16	2.42
							0	7.81	2.39	7.63	2.42	7.47	2.46	7.39	2.47	7.19	2.51	7.08	2.53
							2	8.20	2.43	8.02	2.47	7.85	2.50	7.77	2.52	7.57	2.56	7.46	2.58
							7	8.98	2.52	8.79	2.55	8.62	2.59	8.56	2.60	8.32	2.65	8.20	2.67
							10	9.76	2.60	9.57	2.64	9.38	2.67	9.30	2.69	9.07	2.74	8.94	2.76
							15	10.74	2.70	10.53	2.74	10.34	2.78	10.25	2.80	10.02	2.85	9.88	2.87
2000	2000	5000			9000	64%	-15	5.79	2.47	5.61	2.51	5.45	2.54	5.37	2.56	5.18	2.60	5.08	2.62
							-10	6.93	2.60	6.74	2.64	6.57	2.68	6.49	2.69	6.29	2.73	6.18	2.76
							-5	8.08	2.73	7.88	2.77	7.69	2.81	7.61	2.82	7.39	2.87	7.27	2.89
							0	9.23	2.86	9.01	2.90	8.82	2.94	8.73	2.96	8.50	3.00	8.37	3.03
							2	9.69	2.91	9.47	2.95	9.27	2.99	9.18	3.01	8.94	3.06	8.81	3.09
							7	10.61	3.01	10.38	3.05	10.18	3.10	10.11	3.11	9.83	3.17	9.68	3.20
							10	11.53	3.11	11.30	3.16	11.08	3.20	10.98	3.22	10.72	3.27	10.56	3.30
							15	12.69	3.23	12.44	3.28	12.22	3.33	12.11	3.35	11.83	3.41	11.67	3.44

12. Capacity Table

12-7. AJ140TXJ5KH/EA

HEATING

Combination (Capacity Index)					Combination (Total)	Combination (%)	Outdoor Temperature (°F,DB)	Indoor Temperature (°F, DB)											
								57.2		60.8		64.4		69.98		71.6		75.2	
								TC(kbtu)	PI(kW)	TC(kbtu)	PI(kW)	TC(kbtu)	PI(kW)	TC(kbtu)	PI(kW)	TC(kbtu)	PI(kW)	TC(kbtu)	PI(kW)
2000	2000	6800			10800	77%	-15	6.39	2.71	6.19	2.75	6.02	2.79	5.94	2.80	5.73	2.85	5.62	2.87
							-10	7.66	2.85	7.45	2.90	7.26	2.93	7.17	2.95	6.95	3.00	6.82	3.02
							-5	8.93	2.99	8.70	3.04	8.50	3.08	8.41	3.10	8.17	3.15	8.03	3.17
							0	10.20	3.13	9.96	3.18	9.75	3.22	9.65	3.24	9.39	3.29	9.24	3.32
							2	10.70	3.19	10.46	3.24	10.25	3.28	10.15	3.30	9.88	3.35	9.73	3.38
							7	11.72	3.30	11.47	3.35	11.24	3.39	11.17	3.41	10.86	3.47	10.70	3.50
							10	12.74	3.41	12.48	3.46	12.25	3.51	12.14	3.53	11.84	3.59	11.67	3.62
							15	14.02	3.55	13.75	3.60	13.50	3.65	13.38	3.67	13.07	3.73	12.89	3.77
2000	2500	2500			7000	50%	-15	4.98	2.11	4.82	2.14	4.69	2.17	4.62	2.18	4.46	2.21	4.38	2.23
							-10	5.97	2.22	5.80	2.25	5.65	2.28	5.59	2.29	5.41	2.33	5.32	2.35
							-5	6.95	2.33	6.78	2.36	6.62	2.39	6.55	2.41	6.36	2.44	6.26	2.47
							0	7.94	2.44	7.76	2.47	7.59	2.50	7.52	2.52	7.31	2.56	7.20	2.58
							2	8.34	2.48	8.15	2.52	7.98	2.55	7.90	2.56	7.69	2.61	7.58	2.63
							7	9.13	2.56	8.94	2.60	8.76	2.64	8.70	2.65	8.46	2.70	8.33	2.72
							10	9.92	2.65	9.72	2.69	9.54	2.73	9.45	2.74	9.22	2.79	9.09	2.81
							15	10.92	2.76	10.71	2.80	10.51	2.84	10.42	2.85	10.18	2.90	10.04	2.93
2000	2500	3500			8000	57%	-15	5.34	2.23	5.17	2.27	5.02	2.30	4.95	2.31	4.78	2.35	4.69	2.36
							-10	6.39	2.35	6.21	2.39	6.06	2.42	5.98	2.43	5.80	2.47	5.69	2.49
							-5	7.45	2.47	7.26	2.50	7.09	2.54	7.02	2.55	6.81	2.59	6.70	2.61
							0	8.51	2.58	8.31	2.62	8.13	2.66	8.05	2.67	7.83	2.71	7.71	2.74
							2	8.93	2.63	8.73	2.67	8.55	2.70	8.47	2.72	8.24	2.76	8.12	2.79
							7	9.78	2.72	9.57	2.76	9.38	2.80	9.32	2.81	9.06	2.86	8.93	2.89
							10	10.63	2.81	10.41	2.85	10.22	2.89	10.13	2.91	9.88	2.96	9.74	2.98
							15	11.69	2.92	11.47	2.97	11.26	3.01	11.17	3.03	10.90	3.08	10.75	3.11
2000	2500	5000			9500	68%	-15	6.22	2.64	6.03	2.68	5.85	2.71	5.78	2.73	5.57	2.77	5.47	2.79
							-10	7.45	2.78	7.25	2.82	7.06	2.86	6.98	2.87	6.76	2.92	6.64	2.94
							-5	8.69	2.91	8.47	2.96	8.27	3.00	8.18	3.02	7.95	3.06	7.82	3.09
							0	9.92	3.05	9.69	3.10	9.49	3.14	9.39	3.16	9.14	3.21	9.00	3.24
							2	10.42	3.10	10.18	3.15	9.97	3.19	9.87	3.21	9.61	3.27	9.47	3.29
							7	11.41	3.21	11.16	3.26	10.94	3.30	10.87	3.32	10.57	3.38	10.41	3.41
							10	12.40	3.32	12.15	3.37	11.92	3.41	11.81	3.44	11.52	3.49	11.36	3.53
							15	13.64	3.45	13.38	3.50	13.13	3.55	13.02	3.57	12.72	3.64	12.54	3.67
2000	2500	6800			11300	81%	-15	6.78	2.66	6.57	2.69	6.38	2.73	6.29	2.75	6.07	2.79	5.95	2.81
							-10	8.12	2.79	7.89	2.84	7.69	2.87	7.60	2.89	7.36	2.93	7.23	2.96
							-5	9.46	2.93	9.22	2.98	9.01	3.02	8.91	3.03	8.66	3.08	8.51	3.11
							0	10.81	3.07	10.56	3.11	10.33	3.16	10.23	3.18	9.95	3.23	9.80	3.26
							2	11.35	3.12	11.09	3.17	10.86	3.21	10.75	3.23	10.47	3.28	10.31	3.31
							7	12.42	3.23	12.16	3.28	11.92	3.32	11.84	3.34	11.51	3.40	11.34	3.43
							10	13.50	3.34	13.23	3.39	12.98	3.44	12.86	3.46	12.55	3.51	12.37	3.55
							15	14.86	3.47	14.57	3.53	14.31	3.57	14.18	3.60	13.85	3.66	13.66	3.69
2000	3500	3500			9000	64%	-15	5.69	2.42	5.51	2.46	5.35	2.49	5.28	2.51	5.10	2.55	5.00	2.57
							-10	6.82	2.55	6.63	2.59	6.46	2.62	6.38	2.64	6.18	2.68	6.07	2.70
							-5	7.94	2.68	7.74	2.72	7.57	2.75	7.48	2.77	7.27	2.81	7.15	2.84
							0	9.07	2.80	8.86	2.84	8.67	2.88	8.59	2.90	8.35	2.95	8.23	2.97
							2	9.53	2.85	9.31	2.89	9.12	2.93	9.03	2.95	8.79	3.00	8.66	3.03
							7	10.43	2.95	10.21	3.00	10.01	3.04	9.94	3.05	9.66	3.10	9.52	3.13
							10	11.34	3.05	11.11	3.10	10.90	3.14	10.80	3.16	10.54	3.21	10.39	3.24
							15	12.47	3.17	12.23	3.22	12.01	3.26	11.91	3.28	11.63	3.34	11.47	3.37

12. Capacity Table

12-7. AJ140TXJ5KH/EA

HEATING

Combination (Capacity Index)					Combination (Total)	Combination (%)	Outdoor Temperature (°F,DB)	Indoor Temperature (°F, DB)											
								57.2		60.8		64.4		69.98		71.6		75.2	
								TC(kbtu)	PI(kW)	TC(kbtu)	PI(kW)	TC(kbtu)	PI(kW)	TC(kbtu)	PI(kW)	TC(kbtu)	PI(kW)	TC(kbtu)	PI(kW)
2000	3500	5000			10500	75%	-15	6.88	2.68	6.67	2.72	6.47	2.75	6.39	2.77	6.16	2.81	6.05	2.84
							-10	8.24	2.82	8.01	2.86	7.81	2.90	7.72	2.92	7.47	2.96	7.34	2.99
							-5	9.61	2.96	9.36	3.00	9.15	3.04	9.05	3.06	8.79	3.11	8.64	3.14
							0	10.97	3.10	10.72	3.14	10.49	3.18	10.38	3.20	10.10	3.26	9.95	3.28
							2	11.52	3.15	11.26	3.20	11.03	3.24	10.92	3.26	10.63	3.31	10.47	3.34
							7	12.61	3.26	12.34	3.31	12.10	3.35	12.02	3.37	11.68	3.43	11.51	3.46
							10	13.71	3.37	13.43	3.42	13.18	3.47	13.06	3.49	12.74	3.55	12.56	3.58
							15	15.08	3.50	14.79	3.56	14.52	3.61	14.40	3.63	14.06	3.69	13.87	3.73
2000	3500	6800			12300	88%	-15	6.85	2.68	6.63	2.72	6.44	2.75	6.36	2.77	6.13	2.81	6.01	2.84
							-10	8.20	2.82	7.97	2.86	7.77	2.90	7.68	2.92	7.44	2.96	7.31	2.99
							-5	9.56	2.96	9.32	3.00	9.10	3.04	9.00	3.06	8.74	3.11	8.60	3.14
							0	10.92	3.10	10.66	3.14	10.44	3.18	10.33	3.20	10.05	3.26	9.90	3.28
							2	11.46	3.15	11.20	3.20	10.97	3.24	10.86	3.26	10.58	3.31	10.42	3.34
							7	12.55	3.26	12.28	3.31	12.04	3.35	11.96	3.37	11.63	3.43	11.46	3.46
							10	13.64	3.37	13.36	3.42	13.11	3.47	12.99	3.49	12.68	3.55	12.50	3.58
							15	15.01	3.50	14.72	3.56	14.45	3.61	14.33	3.63	13.99	3.69	13.80	3.73
2000	5000	5000			12000	86%	-15	6.81	2.67	6.60	2.71	6.41	2.75	6.32	2.76	6.10	2.80	5.98	2.83
							-10	8.16	2.81	7.93	2.85	7.73	2.89	7.64	2.91	7.40	2.95	7.27	2.98
							-5	9.51	2.95	9.27	2.99	9.06	3.03	8.96	3.05	8.70	3.10	8.56	3.13
							0	10.86	3.09	10.61	3.13	10.38	3.18	10.28	3.19	10.00	3.25	9.85	3.28
							2	11.40	3.14	11.15	3.19	10.92	3.23	10.81	3.25	10.52	3.30	10.36	3.33
							7	12.49	3.25	12.22	3.30	11.98	3.34	11.90	3.36	11.57	3.42	11.40	3.45
							10	13.57	3.36	13.30	3.41	13.05	3.46	12.93	3.48	12.61	3.54	12.43	3.57
							15	14.93	3.49	14.64	3.55	14.38	3.60	14.26	3.62	13.92	3.68	13.73	3.71
2000	5000	6800			13800	99%	-15	7.44	2.71	7.21	2.75	7.00	2.79	6.91	2.80	6.67	2.85	6.54	2.87
							-10	8.91	2.85	8.67	2.90	8.45	2.93	8.35	2.95	8.08	3.00	7.94	3.02
							-5	10.39	2.99	10.13	3.04	9.89	3.08	9.79	3.10	9.50	3.15	9.35	3.17
							0	11.87	3.13	11.59	3.18	11.34	3.22	11.23	3.24	10.93	3.29	10.76	3.32
							2	12.46	3.19	12.18	3.24	11.92	3.28	11.81	3.30	11.50	3.35	11.32	3.38
							7	13.64	3.30	13.35	3.35	13.09	3.39	13.00	3.41	12.64	3.47	12.45	3.50
							10	14.83	3.41	14.53	3.46	14.25	3.51	14.12	3.53	13.78	3.59	13.58	3.62
							15	16.31	3.55	16.00	3.60	15.71	3.65	15.57	3.67	15.21	3.73	15.00	3.77
2000	6800	6800			15600	111%	-15	7.44	2.71	7.21	2.75	7.00	2.79	6.91	2.80	6.67	2.85	6.54	2.87
							-10	8.91	2.85	8.67	2.90	8.45	2.93	8.35	2.95	8.08	3.00	7.94	3.02
							-5	10.39	2.99	10.13	3.04	9.89	3.08	9.79	3.10	9.50	3.15	9.35	3.17
							0	11.87	3.13	11.59	3.18	11.34	3.22	11.23	3.24	10.93	3.29	10.76	3.32
							2	12.46	3.19	12.18	3.24	11.92	3.28	11.81	3.30	11.50	3.35	11.32	3.38
							7	13.64	3.30	13.35	3.35	13.09	3.39	13.00	3.41	12.64	3.47	12.45	3.50
							10	14.83	3.41	14.53	3.46	14.25	3.51	14.12	3.53	13.78	3.59	13.58	3.62
							15	16.31	3.55	16.00	3.60	15.71	3.65	15.57	3.67	15.21	3.73	15.00	3.77
2500	2500	2500			7500	54%	-15	5.42	2.27	5.25	2.31	5.10	2.34	5.03	2.35	4.86	2.39	4.76	2.41
							-10	6.49	2.39	6.31	2.43	6.15	2.46	6.08	2.47	5.89	2.51	5.79	2.53
							-5	7.57	2.51	7.38	2.55	7.21	2.58	7.13	2.60	6.92	2.64	6.81	2.66
							0	8.64	2.63	8.44	2.67	8.26	2.70	8.18	2.72	7.96	2.76	7.84	2.79
							2	9.08	2.67	8.87	2.71	8.69	2.75	8.60	2.77	8.37	2.81	8.25	2.84
							7	9.94	2.77	9.73	2.81	9.53	2.85	9.47	2.86	9.21	2.91	9.07	2.94
							10	10.80	2.86	10.58	2.90	10.38	2.94	10.29	2.96	10.04	3.01	9.90	3.04
							15	11.88	2.97	11.65	3.02	11.44	3.06	11.35	3.08	11.08	3.13	10.93	3.16

12. Capacity Table

12-7. AJ140TXJ5KH/EA

HEATING

Combination (Capacity Index)					Combination (Total)	Combination (%)	Outdoor Temperature (°F,DB)	Indoor Temperature (°F, DB)											
								57.2		60.8		64.4		69.98		71.6		75.2	
								TC(kbtu)	PI(kW)	TC(kbtu)	PI(kW)	TC(kbtu)	PI(kW)	TC(kbtu)	PI(kW)	TC(kbtu)	PI(kW)	TC(kbtu)	PI(kW)
2500	2500	3500			8500	61%	-15	5.79	2.46	5.61	2.49	5.45	2.53	5.37	2.54	5.18	2.58	5.08	2.60
							-10	6.93	2.59	6.74	2.62	6.57	2.66	6.49	2.67	6.29	2.72	6.18	2.74
							-5	8.08	2.71	7.88	2.75	7.69	2.79	7.61	2.81	7.39	2.85	7.27	2.88
							0	9.23	2.84	9.01	2.88	8.82	2.92	8.73	2.94	8.50	2.99	8.37	3.01
							2	9.69	2.89	9.47	2.93	9.27	2.97	9.18	2.99	8.94	3.04	8.81	3.07
							7	10.61	2.99	10.38	3.03	10.18	3.08	10.11	3.09	9.83	3.15	9.68	3.17
							10	11.53	3.09	11.30	3.14	11.08	3.18	10.98	3.20	10.72	3.25	10.56	3.28
							15	12.69	3.21	12.44	3.26	12.22	3.31	12.11	3.33	11.83	3.38	11.67	3.42
2500	2500	5000			10000	71%	-15	6.39	2.70	6.19	2.74	6.02	2.78	5.94	2.80	5.73	2.84	5.62	2.86
							-10	7.66	2.84	7.45	2.89	7.26	2.92	7.17	2.94	6.95	2.99	6.82	3.01
							-5	8.93	2.98	8.70	3.03	8.50	3.07	8.41	3.09	8.17	3.14	8.03	3.16
							0	10.20	3.12	9.96	3.17	9.75	3.21	9.65	3.23	9.39	3.28	9.24	3.31
							2	10.70	3.18	10.46	3.23	10.25	3.27	10.15	3.29	9.88	3.34	9.73	3.37
							7	11.72	3.29	11.47	3.34	11.24	3.38	11.17	3.40	10.86	3.46	10.70	3.49
							10	12.74	3.40	12.48	3.45	12.25	3.50	12.14	3.52	11.84	3.58	11.67	3.61
							15	14.02	3.54	13.75	3.59	13.50	3.64	13.38	3.66	13.07	3.72	12.89	3.76
2500	2500	6800			11800	84%	-15	6.86	2.69	6.65	2.73	6.46	2.76	6.37	2.78	6.15	2.82	6.03	2.84
							-10	8.22	2.83	7.99	2.87	7.79	2.91	7.70	2.92	7.46	2.97	7.33	2.99
							-5	9.58	2.97	9.34	3.01	9.13	3.05	9.03	3.07	8.77	3.12	8.62	3.15
							0	10.94	3.11	10.69	3.15	10.46	3.19	10.36	3.21	10.08	3.27	9.92	3.29
							2	11.49	3.16	11.23	3.21	11.00	3.25	10.89	3.27	10.60	3.32	10.44	3.35
							7	12.58	3.27	12.31	3.32	12.07	3.36	11.99	3.38	11.66	3.44	11.48	3.47
							10	13.68	3.38	13.40	3.43	13.14	3.48	13.03	3.50	12.71	3.56	12.53	3.59
							15	15.05	3.52	14.75	3.57	14.49	3.62	14.36	3.64	14.03	3.70	13.83	3.74
2500	3500	3500			9500	68%	-15	6.14	2.59	5.95	2.63	5.78	2.66	5.70	2.68	5.50	2.72	5.40	2.74
							-10	7.36	2.73	7.15	2.77	6.97	2.80	6.89	2.82	6.67	2.86	6.56	2.89
							-5	8.58	2.86	8.36	2.90	8.17	2.94	8.08	2.96	7.84	3.01	7.72	3.03
							0	9.79	3.00	9.57	3.04	9.36	3.08	9.27	3.10	9.02	3.15	8.88	3.18
							2	10.28	3.05	10.05	3.09	9.84	3.14	9.75	3.15	9.49	3.21	9.35	3.24
							7	11.26	3.15	11.02	3.20	10.80	3.24	10.73	3.26	10.43	3.32	10.28	3.35
							10	12.24	3.26	11.99	3.31	11.76	3.35	11.66	3.37	11.37	3.43	11.21	3.46
							15	13.46	3.39	13.20	3.44	12.97	3.49	12.85	3.51	12.55	3.57	12.38	3.60
2500	3500	5000			11000	79%	-15	6.76	2.64	6.55	2.68	6.36	2.71	6.28	2.73	6.06	2.77	5.94	2.79
							-10	8.10	2.78	7.87	2.82	7.67	2.86	7.58	2.87	7.34	2.92	7.22	2.94
							-5	9.44	2.91	9.20	2.96	8.99	3.00	8.89	3.02	8.63	3.06	8.49	3.09
							0	10.78	3.05	10.53	3.10	10.31	3.14	10.20	3.16	9.93	3.21	9.77	3.24
							2	11.32	3.10	11.06	3.15	10.83	3.19	10.73	3.21	10.44	3.27	10.29	3.29
							7	12.39	3.21	12.13	3.26	11.89	3.30	11.81	3.32	11.48	3.38	11.31	3.41
							10	13.47	3.32	13.20	3.37	12.95	3.41	12.83	3.44	12.52	3.49	12.34	3.53
							15	14.82	3.45	14.53	3.50	14.27	3.55	14.15	3.57	13.82	3.64	13.63	3.67
2500	3500	6800			12800	91%	-15	6.94	2.71	6.73	2.75	6.53	2.79	6.45	2.80	6.22	2.85	6.10	2.87
							-10	8.32	2.85	8.09	2.90	7.88	2.93	7.79	2.95	7.54	3.00	7.41	3.02
							-5	9.69	2.99	9.45	3.04	9.23	3.08	9.13	3.10	8.87	3.15	8.72	3.17
							0	11.07	3.13	10.82	3.18	10.58	3.22	10.48	3.24	10.20	3.29	10.04	3.32
							2	11.62	3.19	11.36	3.24	11.13	3.28	11.02	3.30	10.73	3.35	10.56	3.38
							7	12.73	3.30	12.46	3.35	12.21	3.39	12.13	3.41	11.79	3.47	11.62	3.50
							10	13.84	3.41	13.55	3.46	13.30	3.51	13.18	3.53	12.86	3.59	12.67	3.62
							15	15.22	3.55	14.93	3.60	14.66	3.65	14.53	3.67	14.19	3.73	14.00	3.77

12. Capacity Table

12-7. AJ140TXJ5KH/EA

HEATING

Combination (Capacity Index)					Combination (Total)	Combination (%)	Outdoor Temperature (°F,DB)	Indoor Temperature (°F, DB)											
								57.2		60.8		64.4		69.98		71.6		75.2	
								TC(kbtu)	PI(kW)	TC(kbtu)	PI(kW)	TC(kbtu)	PI(kW)	TC(kbtu)	PI(kW)	TC(kbtu)	PI(kW)	TC(kbtu)	PI(kW)
2500	5000	5000			12500	89%	-15	6.94	2.72	6.73	2.76	6.53	2.80	6.45	2.81	6.22	2.85	6.10	2.88
							-10	8.32	2.86	8.09	2.90	7.88	2.94	7.79	2.96	7.54	3.01	7.41	3.03
							-5	9.69	3.00	9.45	3.05	9.23	3.09	9.13	3.11	8.87	3.16	8.72	3.18
							0	11.07	3.14	10.82	3.19	10.58	3.23	10.48	3.25	10.20	3.30	10.04	3.33
							2	11.62	3.20	11.36	3.25	11.13	3.29	11.02	3.31	10.73	3.36	10.56	3.39
							7	12.73	3.31	12.46	3.36	12.21	3.40	12.13	3.42	11.79	3.48	11.62	3.51
							10	13.84	3.42	13.55	3.47	13.30	3.52	13.18	3.54	12.86	3.60	12.67	3.63
							15	15.22	3.56	14.93	3.61	14.66	3.66	14.53	3.68	14.19	3.74	14.00	3.78
2500	5000	6800			14300	102%	-15	7.44	2.71	7.21	2.75	7.00	2.79	6.91	2.80	6.67	2.85	6.54	2.87
							-10	8.91	2.85	8.67	2.90	8.45	2.93	8.35	2.95	8.08	3.00	7.94	3.02
							-5	10.39	2.99	10.13	3.04	9.89	3.08	9.79	3.10	9.50	3.15	9.35	3.17
							0	11.87	3.13	11.59	3.18	11.34	3.22	11.23	3.24	10.93	3.29	10.76	3.32
							2	12.46	3.19	12.18	3.24	11.92	3.28	11.81	3.30	11.50	3.35	11.32	3.38
							7	13.64	3.30	13.35	3.35	13.09	3.39	13.00	3.41	12.64	3.47	12.45	3.50
							10	14.83	3.41	14.53	3.46	14.25	3.51	14.12	3.53	13.78	3.59	13.58	3.62
							15	16.31	3.55	16.00	3.60	15.71	3.65	15.57	3.67	15.21	3.73	15.00	3.77
2500	6800	6800			16100	115%	-15	7.44	2.71	7.21	2.75	7.00	2.79	6.91	2.80	6.67	2.85	6.54	2.87
							-10	8.91	2.85	8.67	2.90	8.45	2.93	8.35	2.95	8.08	3.00	7.94	3.02
							-5	10.39	2.99	10.13	3.04	9.89	3.08	9.79	3.10	9.50	3.15	9.35	3.17
							0	11.87	3.13	11.59	3.18	11.34	3.22	11.23	3.24	10.93	3.29	10.76	3.32
							2	12.46	3.19	12.18	3.24	11.92	3.28	11.81	3.30	11.50	3.35	11.32	3.38
							7	13.64	3.30	13.35	3.35	13.09	3.39	13.00	3.41	12.64	3.47	12.45	3.50
							10	14.83	3.41	14.53	3.46	14.25	3.51	14.12	3.53	13.78	3.59	13.58	3.62
							15	16.31	3.55	16.00	3.60	15.71	3.65	15.57	3.67	15.21	3.73	15.00	3.77
3500	3500	3500			10500	75%	-15	6.49	2.73	6.29	2.77	6.11	2.80	6.03	2.82	5.81	2.86	5.70	2.89
							-10	7.78	2.87	7.56	2.91	7.37	2.95	7.28	2.97	7.05	3.01	6.93	3.04
							-5	9.06	3.01	8.84	3.06	8.63	3.10	8.54	3.12	8.29	3.16	8.16	3.19
							0	10.35	3.15	10.11	3.20	9.90	3.24	9.80	3.26	9.53	3.31	9.38	3.34
							2	10.87	3.21	10.62	3.26	10.40	3.30	10.30	3.32	10.03	3.37	9.88	3.40
							7	11.90	3.32	11.65	3.37	11.42	3.41	11.34	3.43	11.02	3.49	10.86	3.52
							10	12.93	3.43	12.67	3.48	12.43	3.53	12.32	3.55	12.02	3.61	11.85	3.64
							15	14.23	3.57	13.95	3.62	13.70	3.67	13.59	3.69	13.27	3.76	13.08	3.79
3500	3500	5000			12000	86%	-15	6.83	2.66	6.62	2.70	6.43	2.74	6.34	2.75	6.12	2.80	6.00	2.82
							-10	8.18	2.80	7.95	2.84	7.75	2.88	7.66	2.90	7.42	2.94	7.29	2.97
							-5	9.53	2.94	9.29	2.98	9.08	3.02	8.98	3.04	8.72	3.09	8.58	3.12
							0	10.89	3.08	10.64	3.12	10.41	3.17	10.31	3.19	10.03	3.24	9.87	3.27
							2	11.43	3.13	11.18	3.18	10.94	3.22	10.84	3.24	10.55	3.29	10.39	3.32
							7	12.52	3.24	12.25	3.29	12.01	3.33	11.93	3.35	11.60	3.41	11.43	3.44
							10	13.61	3.35	13.33	3.40	13.08	3.45	12.96	3.47	12.65	3.53	12.47	3.56
							15	14.97	3.48	14.68	3.54	14.42	3.58	14.29	3.61	13.96	3.67	13.77	3.70
3500	3500	6800			13800	99%	-15	7.44	2.71	7.21	2.75	7.00	2.79	6.91	2.80	6.67	2.85	6.54	2.87
							-10	8.91	2.85	8.67	2.90	8.45	2.93	8.35	2.95	8.08	3.00	7.94	3.02
							-5	10.39	2.99	10.13	3.04	9.89	3.08	9.79	3.10	9.50	3.15	9.35	3.17
							0	11.87	3.13	11.59	3.18	11.34	3.22	11.23	3.24	10.93	3.29	10.76	3.32
							2	12.46	3.19	12.18	3.24	11.92	3.28	11.81	3.30	11.50	3.35	11.32	3.38
							7	13.64	3.30	13.35	3.35	13.09	3.39	13.00	3.41	12.64	3.47	12.45	3.50
							10	14.83	3.41	14.53	3.46	14.25	3.51	14.12	3.53	13.78	3.59	13.58	3.62
							15	16.31	3.55	16.00	3.60	15.71	3.65	15.57	3.67	15.21	3.73	15.00	3.77

12. Capacity Table

12-7. AJ140TXJ5KH/EA

HEATING

Combination (Capacity Index)					Combination (Total)	Combination (%)	Outdoor Temperature (°F,DB)	Indoor Temperature (°F, DB)											
								57.2		60.8		64.4		69.98		71.6		75.2	
								TC(kbtu)	PI(kW)	TC(kbtu)	PI(kW)	TC(kbtu)	PI(kW)	TC(kbtu)	PI(kW)	TC(kbtu)	PI(kW)	TC(kbtu)	PI(kW)
3500	5000	5000			13500	96%	-15	7.44	2.71	7.21	2.75	7.00	2.79	6.91	2.80	6.67	2.85	6.54	2.87
							-10	8.91	2.85	8.67	2.90	8.45	2.93	8.35	2.95	8.08	3.00	7.94	3.02
							-5	10.39	2.99	10.13	3.04	9.89	3.08	9.79	3.10	9.50	3.15	9.35	3.17
							0	11.87	3.13	11.59	3.18	11.34	3.22	11.23	3.24	10.93	3.29	10.76	3.32
							2	12.46	3.19	12.18	3.24	11.92	3.28	11.81	3.30	11.50	3.35	11.32	3.38
							7	13.64	3.30	13.35	3.35	13.09	3.39	13.00	3.41	12.64	3.47	12.45	3.50
							10	14.83	3.41	14.53	3.46	14.25	3.51	14.12	3.53	13.78	3.59	13.58	3.62
							15	16.31	3.55	16.00	3.60	15.71	3.65	15.57	3.67	15.21	3.73	15.00	3.77
3500	5000	6800			15300	109%	-15	7.44	2.71	7.21	2.75	7.00	2.79	6.91	2.80	6.67	2.85	6.54	2.87
							-10	8.91	2.85	8.67	2.90	8.45	2.93	8.35	2.95	8.08	3.00	7.94	3.02
							-5	10.39	2.99	10.13	3.04	9.89	3.08	9.79	3.10	9.50	3.15	9.35	3.17
							0	11.87	3.13	11.59	3.18	11.34	3.22	11.23	3.24	10.93	3.29	10.76	3.32
							2	12.46	3.19	12.18	3.24	11.92	3.28	11.81	3.30	11.50	3.35	11.32	3.38
							7	13.64	3.30	13.35	3.35	13.09	3.39	13.00	3.41	12.64	3.47	12.45	3.50
							10	14.83	3.41	14.53	3.46	14.25	3.51	14.12	3.53	13.78	3.59	13.58	3.62
							15	16.31	3.55	16.00	3.60	15.71	3.65	15.57	3.67	15.21	3.73	15.00	3.77
3500	6800	6800			17100	122%	-15	7.44	2.71	7.21	2.75	7.00	2.79	6.91	2.80	6.67	2.85	6.54	2.87
							-10	8.91	2.85	8.67	2.90	8.45	2.93	8.35	2.95	8.08	3.00	7.94	3.02
							-5	10.39	2.99	10.13	3.04	9.89	3.08	9.79	3.10	9.50	3.15	9.35	3.17
							0	11.87	3.13	11.59	3.18	11.34	3.22	11.23	3.24	10.93	3.29	10.76	3.32
							2	12.46	3.19	12.18	3.24	11.92	3.28	11.81	3.30	11.50	3.35	11.32	3.38
							7	13.64	3.30	13.35	3.35	13.09	3.39	13.00	3.41	12.64	3.47	12.45	3.50
							10	14.83	3.41	14.53	3.46	14.25	3.51	14.12	3.53	13.78	3.59	13.58	3.62
							15	16.31	3.55	16.00	3.60	15.71	3.65	15.57	3.67	15.21	3.73	15.00	3.77
5000	5000	5000			15000	107%	-15	7.44	2.71	7.21	2.75	7.00	2.79	6.82	2.82	6.67	2.85	6.54	2.87
							-10	8.91	2.85	8.67	2.90	8.45	2.93	8.25	2.97	8.08	3.00	7.94	3.02
							-5	10.39	2.99	10.13	3.04	9.89	3.08	9.69	3.11	9.50	3.15	9.35	3.17
							0	11.87	3.13	11.59	3.18	11.34	3.22	11.12	3.26	10.93	3.29	10.76	3.32
							2	12.46	3.19	12.18	3.24	11.92	3.28	11.70	3.32	11.50	3.35	11.32	3.38
							7	13.94	3.33	13.65	3.38	13.38	3.42	13.00	3.41	12.92	3.50	12.74	3.53
							10	14.83	3.41	14.53	3.46	14.25	3.51	14.00	3.55	13.78	3.59	13.58	3.62
							15	16.31	3.55	16.00	3.60	15.71	3.65	15.45	3.69	15.21	3.73	15.00	3.77
5000	5000	6800			16800	120%	-15	7.44	2.71	7.21	2.75	7.00	2.79	6.82	2.82	6.67	2.85	6.54	2.87
							-10	8.91	2.85	8.67	2.90	8.45	2.93	8.25	2.97	8.08	3.00	7.94	3.02
							-5	10.39	2.99	10.13	3.04	9.89	3.08	9.69	3.11	9.50	3.15	9.35	3.17
							0	11.87	3.13	11.59	3.18	11.34	3.22	11.12	3.26	10.93	3.29	10.76	3.32
							2	12.46	3.19	12.18	3.24	11.92	3.28	11.70	3.32	11.50	3.35	11.32	3.38
							7	13.94	3.33	13.65	3.38	13.38	3.42	13.00	3.41	12.92	3.50	12.74	3.53
							10	14.83	3.41	14.53	3.46	14.25	3.51	14.00	3.55	13.78	3.59	13.58	3.62
							15	16.31	3.55	16.00	3.60	15.71	3.65	15.45	3.69	15.21	3.73	15.00	3.77
2000	2000	2000	2000		8000	57%	-15	5.30	2.09	5.13	2.12	4.99	2.15	4.92	2.16	4.75	2.19	4.66	2.21
							-10	6.35	2.20	6.17	2.23	6.02	2.26	5.94	2.28	5.76	2.31	5.66	2.33
							-5	7.40	2.31	7.21	2.34	7.05	2.37	6.97	2.39	6.77	2.43	6.66	2.45
							0	8.45	2.42	8.26	2.45	8.08	2.49	8.00	2.50	7.78	2.54	7.66	2.56
							2	8.87	2.46	8.67	2.50	8.49	2.53	8.41	2.55	8.19	2.59	8.07	2.61
							7	9.72	2.54	9.51	2.58	9.32	2.62	9.26	2.63	9.00	2.68	8.87	2.70
							10	10.56	2.63	10.35	2.67	10.15	2.71	10.06	2.72	9.82	2.77	9.68	2.79
							15	11.62	2.74	11.39	2.78	11.19	2.81	11.09	2.83	10.83	2.88	10.68	2.91

12. Capacity Table

12-7. AJ140TXJ5KH/EA

HEATING

Combination (Capacity Index)					Combination (Total)	Combination (%)	Outdoor Temperature (°F,DB)	Indoor Temperature (°F, DB)											
								57.2		60.8		64.4		69.98		71.6		75.2	
								TC(kbtu)	PI(kW)	TC(kbtu)	PI(kW)	TC(kbtu)	PI(kW)	TC(kbtu)	PI(kW)	TC(kbtu)	PI(kW)	TC(kbtu)	PI(kW)
2000	2000	2000	2500		8500	61%	-15	5.77	2.31	5.59	2.34	5.43	2.37	5.36	2.38	5.17	2.42	5.07	2.44
							-10	6.91	2.43	6.72	2.46	6.55	2.49	6.47	2.51	6.27	2.55	6.16	2.57
							-5	8.06	2.55	7.85	2.58	7.67	2.62	7.59	2.63	7.37	2.68	7.25	2.70
							0	9.20	2.66	8.99	2.70	8.80	2.74	8.71	2.76	8.47	2.80	8.34	2.83
							2	9.66	2.71	9.44	2.75	9.25	2.79	9.16	2.81	8.91	2.85	8.78	2.88
							7	10.58	2.81	10.35	2.85	10.15	2.89	10.08	2.90	9.80	2.95	9.66	2.98
							10	11.50	2.90	11.26	2.94	11.05	2.98	10.95	3.00	10.68	3.05	10.53	3.08
							15	12.65	3.02	12.40	3.06	12.18	3.10	12.08	3.12	11.79	3.18	11.63	3.21
2000	2000	2000	3500		9500	68%	-15	6.14	2.43	5.95	2.47	5.78	2.50	5.70	2.52	5.50	2.55	5.40	2.57
							-10	7.36	2.56	7.15	2.60	6.97	2.63	6.89	2.65	6.67	2.69	6.56	2.71
							-5	8.58	2.69	8.36	2.73	8.17	2.76	8.08	2.78	7.84	2.82	7.72	2.85
							0	9.79	2.81	9.57	2.85	9.36	2.89	9.27	2.91	9.02	2.96	8.88	2.98
							2	10.28	2.86	10.05	2.90	9.84	2.94	9.75	2.96	9.49	3.01	9.35	3.04
							7	11.26	2.96	11.02	3.01	10.80	3.05	10.73	3.06	10.43	3.11	10.28	3.14
							10	12.24	3.06	11.99	3.11	11.76	3.15	11.66	3.17	11.37	3.22	11.21	3.25
							15	13.46	3.18	13.20	3.23	12.97	3.27	12.85	3.29	12.55	3.35	12.38	3.38
2000	2000	2000	5000		11000	79%	-15	7.05	2.60	6.83	2.64	6.63	2.67	6.54	2.69	6.31	2.73	6.19	2.75
							-10	8.44	2.74	8.21	2.78	8.00	2.81	7.90	2.83	7.65	2.87	7.52	2.90
							-5	9.84	2.87	9.59	2.91	9.37	2.95	9.27	2.97	9.00	3.02	8.85	3.04
							0	11.24	3.00	10.98	3.05	10.74	3.09	10.63	3.11	10.35	3.16	10.19	3.19
							2	11.80	3.06	11.53	3.10	11.29	3.15	11.18	3.16	10.89	3.22	10.72	3.24
							7	12.92	3.16	12.64	3.21	12.39	3.25	12.31	3.27	11.97	3.33	11.79	3.36
							10	14.04	3.27	13.76	3.32	13.49	3.36	13.37	3.38	13.05	3.44	12.86	3.47
							15	15.45	3.40	15.15	3.45	14.87	3.50	14.75	3.52	14.40	3.58	14.20	3.61
2000	2000	2000	6800		12800	91%	-15	7.23	2.67	7.00	2.71	6.80	2.75	6.71	2.76	6.48	2.80	6.35	2.83
							-10	8.66	2.81	8.42	2.85	8.21	2.89	8.11	2.91	7.85	2.95	7.72	2.98
							-5	10.09	2.95	9.84	2.99	9.61	3.03	9.51	3.05	9.23	3.10	9.08	3.13
							0	11.53	3.09	11.26	3.13	11.02	3.18	10.91	3.19	10.62	3.25	10.45	3.28
							2	12.10	3.14	11.83	3.19	11.59	3.23	11.47	3.25	11.17	3.30	11.00	3.33
							7	13.25	3.25	12.97	3.30	12.71	3.34	12.63	3.36	12.28	3.42	12.10	3.45
							10	14.41	3.36	14.11	3.41	13.85	3.46	13.72	3.48	13.39	3.54	13.20	3.57
							15	15.85	3.49	15.54	3.55	15.26	3.60	15.13	3.62	14.78	3.68	14.57	3.71
2000	2000	2500	2500		9000	64%	-15	6.22	2.46	6.03	2.50	5.85	2.53	5.78	2.55	5.57	2.59	5.47	2.61
							-10	7.45	2.59	7.25	2.63	7.06	2.67	6.98	2.68	6.76	2.72	6.64	2.75
							-5	8.69	2.72	8.47	2.76	8.27	2.80	8.18	2.82	7.95	2.86	7.82	2.88
							0	9.92	2.85	9.69	2.89	9.49	2.93	9.39	2.95	9.14	2.99	9.00	3.02
							2	10.42	2.90	10.18	2.94	9.97	2.98	9.87	3.00	9.61	3.05	9.47	3.08
							7	11.41	3.00	11.16	3.04	10.94	3.09	10.87	3.10	10.57	3.16	10.41	3.18
							10	12.40	3.10	12.15	3.15	11.92	3.19	11.81	3.21	11.52	3.26	11.36	3.29
							15	13.64	3.22	13.38	3.27	13.13	3.32	13.02	3.34	12.72	3.39	12.54	3.43
2000	2000	2500	3500		10000	71%	-15	6.61	2.60	6.40	2.64	6.22	2.67	6.14	2.69	5.92	2.73	5.81	2.75
							-10	7.92	2.74	7.70	2.78	7.50	2.81	7.42	2.83	7.18	2.87	7.06	2.90
							-5	9.23	2.87	9.00	2.91	8.79	2.95	8.70	2.97	8.44	3.02	8.31	3.04
							0	10.54	3.00	10.30	3.05	10.08	3.09	9.98	3.11	9.71	3.16	9.56	3.19
							2	11.07	3.06	10.82	3.10	10.59	3.15	10.49	3.16	10.21	3.22	10.06	3.24
							7	12.12	3.16	11.86	3.21	11.63	3.25	11.55	3.27	11.23	3.33	11.06	3.36
							10	13.17	3.27	12.91	3.32	12.66	3.36	12.55	3.38	12.24	3.44	12.07	3.47
							15	14.49	3.40	14.21	3.45	13.96	3.50	13.84	3.52	13.51	3.58	13.33	3.61

12. Capacity Table

12-7. AJ140TXJ5KH/EA

HEATING

Combination (Capacity Index)					Combination (Total)	Combination (%)	Outdoor Temperature (°F,DB)	Indoor Temperature (°F, DB)											
								57.2		60.8		64.4		69.98		71.6		75.2	
								TC(kbtu)	PI(kW)	TC(kbtu)	PI(kW)	TC(kbtu)	PI(kW)	TC(kbtu)	PI(kW)	TC(kbtu)	PI(kW)	TC(kbtu)	PI(kW)
2000	2000	2500	5000		11500	82%	-15	7.15	2.63	6.93	2.67	6.73	2.71	6.64	2.72	6.40	2.76	6.28	2.78
							-10	8.56	2.77	8.33	2.81	8.12	2.85	8.02	2.86	7.77	2.91	7.63	2.93
							-5	9.98	2.91	9.73	2.95	9.51	2.99	9.40	3.01	9.13	3.05	8.98	3.08
							0	11.40	3.04	11.14	3.09	10.90	3.13	10.79	3.15	10.50	3.20	10.34	3.23
							2	11.97	3.10	11.70	3.14	11.46	3.18	11.34	3.20	11.05	3.26	10.88	3.28
							7	13.11	3.20	12.83	3.25	12.57	3.29	12.49	3.31	12.14	3.37	11.96	3.40
							10	14.25	3.31	13.96	3.36	13.69	3.40	13.57	3.43	13.24	3.48	13.05	3.52
							15	15.67	3.44	15.37	3.49	15.09	3.54	14.96	3.56	14.61	3.62	14.41	3.66
2000	2000	2500	6800		13300	95%	-15	7.33	2.70	7.10	2.74	6.90	2.78	6.81	2.80	6.57	2.84	6.44	2.86
							-10	8.78	2.84	8.54	2.89	8.32	2.92	8.22	2.94	7.97	2.99	7.83	3.01
							-5	10.24	2.98	9.98	3.03	9.75	3.07	9.64	3.09	9.37	3.14	9.21	3.16
							0	11.69	3.12	11.42	3.17	11.18	3.21	11.07	3.23	10.77	3.28	10.60	3.31
							2	12.28	3.18	12.00	3.23	11.75	3.27	11.64	3.29	11.33	3.34	11.16	3.37
							7	13.44	3.29	13.16	3.34	12.90	3.38	12.81	3.40	12.45	3.46	12.27	3.49
							10	14.61	3.40	14.31	3.45	14.04	3.50	13.92	3.52	13.58	3.58	13.39	3.61
							15	16.07	3.54	15.76	3.59	15.48	3.64	15.35	3.66	14.99	3.72	14.78	3.76
2000	2000	3500	3500		11000	79%	-15	7.03	2.58	6.81	2.61	6.61	2.65	6.53	2.66	6.30	2.70	6.18	2.73
							-10	8.42	2.71	8.19	2.75	7.98	2.79	7.88	2.80	7.64	2.85	7.50	2.87
							-5	9.81	2.84	9.57	2.89	9.35	2.92	9.24	2.94	8.98	2.99	8.83	3.02
							0	11.21	2.98	10.95	3.02	10.72	3.06	10.61	3.08	10.32	3.13	10.16	3.16
							2	11.77	3.03	11.50	3.08	11.26	3.12	11.15	3.14	10.86	3.19	10.70	3.22
							7	12.89	3.14	12.61	3.18	12.36	3.22	12.28	3.24	11.94	3.30	11.76	3.33
							10	14.01	3.24	13.72	3.29	13.46	3.33	13.34	3.35	13.02	3.41	12.83	3.44
							15	15.41	3.37	15.11	3.42	14.84	3.47	14.71	3.49	14.37	3.55	14.17	3.58
2000	2000	3500	5000		12500	89%	-15	7.21	2.66	6.99	2.69	6.79	2.73	6.70	2.75	6.46	2.79	6.34	2.81
							-10	8.64	2.79	8.40	2.84	8.19	2.87	8.09	2.89	7.84	2.93	7.70	2.96
							-5	10.07	2.93	9.82	2.98	9.59	3.02	9.49	3.03	9.21	3.08	9.06	3.11
							0	11.50	3.07	11.24	3.11	10.99	3.16	10.88	3.18	10.59	3.23	10.43	3.26
							2	12.07	3.12	11.80	3.17	11.56	3.21	11.44	3.23	11.14	3.28	10.97	3.31
							7	13.22	3.23	12.94	3.28	12.68	3.32	12.60	3.34	12.25	3.40	12.07	3.43
							10	14.37	3.34	14.08	3.39	13.81	3.44	13.69	3.46	13.36	3.51	13.17	3.55
							15	15.81	3.47	15.51	3.53	15.23	3.57	15.09	3.60	14.74	3.66	14.54	3.69
2000	2000	3500	6800		14300	102%	-15	7.44	2.71	7.21	2.75	7.00	2.79	6.91	2.80	6.67	2.85	6.54	2.87
							-10	8.91	2.85	8.67	2.90	8.45	2.93	8.35	2.95	8.08	3.00	7.94	3.02
							-5	10.39	2.99	10.13	3.04	9.89	3.08	9.79	3.10	9.50	3.15	9.35	3.17
							0	11.87	3.13	11.59	3.18	11.34	3.22	11.23	3.24	10.93	3.29	10.76	3.32
							2	12.46	3.19	12.18	3.24	11.92	3.28	11.81	3.30	11.50	3.35	11.32	3.38
							7	13.64	3.30	13.35	3.35	13.09	3.39	13.00	3.41	12.64	3.47	12.45	3.50
							10	14.83	3.41	14.53	3.46	14.25	3.51	14.12	3.53	13.78	3.59	13.58	3.62
							15	16.31	3.55	16.00	3.60	15.71	3.65	15.57	3.67	15.21	3.73	15.00	3.77
2000	2000	5000	5000		14000	100%	-15	7.44	2.71	7.21	2.75	7.00	2.79	6.91	2.80	6.67	2.85	6.54	2.87
							-10	8.91	2.85	8.67	2.90	8.45	2.93	8.35	2.95	8.08	3.00	7.94	3.02
							-5	10.39	2.99	10.13	3.04	9.89	3.08	9.79	3.10	9.50	3.15	9.35	3.17
							0	11.87	3.13	11.59	3.18	11.34	3.22	11.23	3.24	10.93	3.29	10.76	3.32
							2	12.46	3.19	12.18	3.24	11.92	3.28	11.81	3.30	11.50	3.35	11.32	3.38
							7	13.64	3.30	13.35	3.35	13.09	3.39	13.00	3.41	12.64	3.47	12.45	3.50
							10	14.83	3.41	14.53	3.46	14.25	3.51	14.12	3.53	13.78	3.59	13.58	3.62
							15	16.31	3.55	16.00	3.60	15.71	3.65	15.57	3.67	15.21	3.73	15.00	3.77

12. Capacity Table

12-7. AJ140TXJ5KH/EA

HEATING

Combination (Capacity Index)					Combination (Total)	Combination (%)	Outdoor Temperature (°F,DB)	Indoor Temperature (°F, DB)											
								57.2		60.8		64.4		69.98		71.6		75.2	
								TC(kbtu)	PI(kW)	TC(kbtu)	PI(kW)	TC(kbtu)	PI(kW)	TC(kbtu)	PI(kW)	TC(kbtu)	PI(kW)	TC(kbtu)	PI(kW)
2000	2000	5000	6800		15800	113%	-15	8.54	3.39	8.27	3.44	8.03	3.49	7.92	3.51	7.65	3.56	7.50	3.59
							-10	10.22	3.57	9.94	3.63	9.69	3.67	9.57	3.69	9.27	3.75	9.11	3.78
							-5	11.92	3.75	11.62	3.80	11.35	3.85	11.22	3.88	10.90	3.94	10.72	3.97
							0	13.61	3.92	13.30	3.98	13.01	4.04	12.88	4.06	12.53	4.13	12.34	4.16
							2	14.29	3.99	13.97	4.05	13.68	4.11	13.54	4.13	13.19	4.20	12.99	4.24
							7	15.65	4.13	15.31	4.19	15.01	4.25	14.91	4.27	14.49	4.35	14.28	4.39
							10	17.01	4.27	16.66	4.33	16.35	4.39	16.20	4.42	15.80	4.49	15.58	4.54
							15	18.71	4.44	18.35	4.51	18.02	4.57	17.86	4.60	17.44	4.68	17.20	4.72
2000	2500	2500	2500		9500	68%	-15	6.69	2.63	6.48	2.67	6.30	2.71	6.21	2.72	5.99	2.76	5.88	2.78
							-10	8.02	2.77	7.79	2.81	7.60	2.85	7.50	2.86	7.27	2.91	7.14	2.93
							-5	9.34	2.91	9.11	2.95	8.90	2.99	8.80	3.01	8.55	3.05	8.41	3.08
							0	10.67	3.04	10.42	3.09	10.20	3.13	10.10	3.15	9.83	3.20	9.67	3.23
							2	11.20	3.10	10.95	3.14	10.72	3.18	10.62	3.20	10.34	3.26	10.18	3.28
							7	12.27	3.20	12.01	3.25	11.77	3.29	11.69	3.31	11.36	3.37	11.20	3.40
							10	13.33	3.31	13.06	3.36	12.82	3.40	12.70	3.43	12.39	3.48	12.22	3.52
							15	14.67	3.44	14.39	3.49	14.13	3.54	14.00	3.56	13.68	3.62	13.49	3.66
2000	2500	2500	3500		10500	75%	-15	6.69	2.63	6.48	2.67	6.30	2.71	6.21	2.72	5.99	2.76	5.88	2.78
							-10	8.02	2.77	7.79	2.81	7.60	2.85	7.50	2.86	7.27	2.91	7.14	2.93
							-5	9.34	2.91	9.11	2.95	8.90	2.99	8.80	3.01	8.55	3.05	8.41	3.08
							0	10.67	3.04	10.42	3.09	10.20	3.13	10.10	3.15	9.83	3.20	9.67	3.23
							2	11.20	3.10	10.95	3.14	10.72	3.18	10.62	3.20	10.34	3.26	10.18	3.28
							7	12.27	3.20	12.01	3.25	11.77	3.29	11.69	3.31	11.36	3.37	11.20	3.40
							10	13.33	3.31	13.06	3.36	12.82	3.40	12.70	3.43	12.39	3.48	12.22	3.52
							15	14.67	3.44	14.39	3.49	14.13	3.54	14.00	3.56	13.68	3.62	13.49	3.66
2000	2500	2500	5000		12000	86%	-15	7.23	2.66	7.00	2.70	6.80	2.74	6.71	2.75	6.48	2.80	6.35	2.82
							-10	8.66	2.80	8.42	2.84	8.21	2.88	8.11	2.90	7.85	2.94	7.72	2.97
							-5	10.09	2.94	9.84	2.98	9.61	3.02	9.51	3.04	9.23	3.09	9.08	3.12
							0	11.53	3.08	11.26	3.12	11.02	3.17	10.91	3.19	10.62	3.24	10.45	3.27
							2	12.10	3.13	11.83	3.18	11.59	3.22	11.47	3.24	11.17	3.29	11.00	3.32
							7	13.25	3.24	12.97	3.29	12.71	3.33	12.63	3.35	12.28	3.41	12.10	3.44
							10	14.41	3.35	14.11	3.40	13.85	3.45	13.72	3.47	13.39	3.53	13.20	3.56
							15	15.85	3.48	15.54	3.54	15.26	3.58	15.13	3.61	14.78	3.67	14.57	3.70
2000	2500	2500	6800		13800	99%	-15	7.44	2.71	7.21	2.75	7.00	2.79	6.91	2.80	6.67	2.85	6.54	2.87
							-10	8.91	2.85	8.67	2.90	8.45	2.93	8.35	2.95	8.08	3.00	7.94	3.02
							-5	10.39	2.99	10.13	3.04	9.89	3.08	9.79	3.10	9.50	3.15	9.35	3.17
							0	11.87	3.13	11.59	3.18	11.34	3.22	11.23	3.24	10.93	3.29	10.76	3.32
							2	12.46	3.19	12.18	3.24	11.92	3.28	11.81	3.30	11.50	3.35	11.32	3.38
							7	13.64	3.30	13.35	3.35	13.09	3.39	13.00	3.41	12.64	3.47	12.45	3.50
							10	14.83	3.41	14.53	3.46	14.25	3.51	14.12	3.53	13.78	3.59	13.58	3.62
							15	16.31	3.55	16.00	3.60	15.71	3.65	15.57	3.67	15.21	3.73	15.00	3.77
2000	2500	3500	3500		11500	82%	-15	7.12	2.62	6.89	2.65	6.69	2.69	6.60	2.70	6.37	2.75	6.25	2.77
							-10	8.52	2.75	8.29	2.79	8.08	2.83	7.98	2.85	7.73	2.89	7.59	2.92
							-5	9.93	2.89	9.68	2.93	9.46	2.97	9.36	2.99	9.09	3.04	8.94	3.06
							0	11.35	3.02	11.08	3.07	10.85	3.11	10.74	3.13	10.45	3.18	10.29	3.21
							2	11.91	3.08	11.64	3.12	11.40	3.16	11.29	3.18	10.99	3.24	10.83	3.26
							7	13.04	3.18	12.77	3.23	12.51	3.27	12.43	3.29	12.08	3.35	11.91	3.38
							10	14.18	3.29	13.89	3.34	13.63	3.38	13.50	3.41	13.18	3.46	12.99	3.49
							15	15.60	3.42	15.30	3.47	15.02	3.52	14.89	3.54	14.54	3.60	14.34	3.64

12. Capacity Table

12-7. AJ140TXJ5KH/EA

HEATING

Combination (Capacity Index)					Combination (Total)	Combination (%)	Outdoor Temperature (°F,DB)	Indoor Temperature (°F, DB)											
								57.2		60.8		64.4		69.98		71.6		75.2	
								TC(kbtu)	PI(kW)	TC(kbtu)	PI(kW)	TC(kbtu)	PI(kW)	TC(kbtu)	PI(kW)	TC(kbtu)	PI(kW)	TC(kbtu)	PI(kW)
2000	2500	3500	5000		13000	93%	-15	7.32	2.69	7.09	2.73	6.88	2.76	6.79	2.78	6.55	2.82	6.43	2.84
							-10	8.76	2.83	8.52	2.87	8.30	2.91	8.20	2.92	7.95	2.97	7.81	2.99
							-5	10.21	2.97	9.96	3.01	9.73	3.05	9.62	3.07	9.34	3.12	9.19	3.15
							0	11.67	3.11	11.40	3.15	11.15	3.19	11.04	3.21	10.74	3.27	10.58	3.29
							2	12.25	3.16	11.97	3.21	11.72	3.25	11.61	3.27	11.30	3.32	11.13	3.35
							7	13.41	3.27	13.13	3.32	12.87	3.36	12.78	3.38	12.42	3.44	12.24	3.47
							10	14.58	3.38	14.28	3.43	14.01	3.48	13.88	3.50	13.55	3.56	13.35	3.59
							15	16.04	3.52	15.73	3.57	15.44	3.62	15.31	3.64	14.95	3.70	14.75	3.74
2000	2500	5000	5000		14500	104%	-15	7.87	2.86	7.62	2.90	7.41	2.94	7.31	2.96	7.05	3.00	6.92	3.03
							-10	9.43	3.01	9.17	3.06	8.93	3.10	8.83	3.12	8.55	3.16	8.40	3.19
							-5	10.99	3.16	10.71	3.21	10.46	3.25	10.35	3.27	10.05	3.32	9.89	3.35
							0	12.55	3.31	12.26	3.36	12.00	3.40	11.88	3.42	11.56	3.48	11.38	3.51
							2	13.18	3.37	12.88	3.42	12.61	3.46	12.49	3.48	12.16	3.54	11.98	3.57
							7	14.43	3.48	14.12	3.54	13.84	3.58	13.75	3.60	13.37	3.66	13.17	3.70
							10	15.68	3.60	15.36	3.65	15.07	3.70	14.94	3.73	14.57	3.79	14.37	3.82
							15	17.25	3.74	16.92	3.80	16.61	3.85	16.47	3.88	16.09	3.94	15.87	3.98
2000	2500	3500	6800		14800	106%	-15	7.99	2.96	7.74	3.00	7.52	3.04	7.42	3.06	7.16	3.10	7.02	3.13
							-10	9.57	3.11	9.31	3.16	9.07	3.20	8.96	3.22	8.68	3.27	8.53	3.30
							-5	11.16	3.27	10.88	3.31	10.62	3.36	10.51	3.38	10.21	3.43	10.04	3.46
							0	12.74	3.42	12.45	3.47	12.18	3.52	12.06	3.54	11.73	3.59	11.55	3.63
							2	13.38	3.48	13.08	3.53	12.81	3.58	12.68	3.60	12.35	3.66	12.16	3.69
							7	14.65	3.60	14.34	3.65	14.05	3.70	13.96	3.72	13.57	3.79	13.37	3.82
							10	15.92	3.72	15.60	3.78	15.30	3.83	15.17	3.85	14.80	3.91	14.59	3.95
							15	17.52	3.87	17.18	3.93	16.87	3.98	16.72	4.01	16.33	4.07	16.11	4.11
2000	2500	5000	5000		14500	104%	-15	8.59	3.43	8.32	3.49	8.08	3.53	7.97	3.55	7.69	3.61	7.54	3.63
							-10	10.29	3.61	10.00	3.67	9.75	3.72	9.63	3.74	9.33	3.80	9.16	3.83
							-5	11.99	3.79	11.69	3.85	11.42	3.90	11.29	3.92	10.97	3.99	10.79	4.02
							0	13.69	3.97	13.38	4.03	13.09	4.08	12.96	4.11	12.61	4.17	12.41	4.21
							2	14.37	4.04	14.05	4.10	13.76	4.16	13.62	4.18	13.27	4.25	13.06	4.29
							7	15.74	4.18	15.41	4.24	15.10	4.30	15.00	4.32	14.58	4.40	14.37	4.44
							10	17.11	4.32	16.76	4.38	16.44	4.44	16.30	4.47	15.90	4.55	15.67	4.59
							15	18.82	4.49	18.46	4.56	18.13	4.62	17.97	4.65	17.55	4.73	17.31	4.78
2000	2500	5000	6800		16300	116%	-15	7.20	2.64	6.97	2.68	6.77	2.71	6.68	2.73	6.45	2.77	6.32	2.79
							-10	8.62	2.78	8.38	2.82	8.17	2.86	8.07	2.87	7.82	2.92	7.68	2.94
							-5	10.05	2.91	9.79	2.96	9.57	3.00	9.46	3.02	9.19	3.06	9.04	3.09
							0	11.47	3.05	11.21	3.10	10.97	3.14	10.86	3.16	10.57	3.21	10.40	3.24
							2	12.05	3.10	11.78	3.15	11.53	3.19	11.42	3.21	11.12	3.27	10.95	3.29
							7	13.19	3.21	12.91	3.26	12.65	3.30	12.57	3.32	12.22	3.38	12.04	3.41
							10	14.34	3.32	14.05	3.37	13.78	3.41	13.66	3.44	13.32	3.49	13.13	3.53
							15	15.77	3.45	15.47	3.50	15.19	3.55	15.06	3.57	14.71	3.64	14.50	3.67
2000	3500	3500	3500		12500	89%	-15	7.44	2.71	7.21	2.75	7.00	2.79	6.91	2.80	6.67	2.85	6.54	2.87
							-10	8.91	2.85	8.67	2.90	8.45	2.93	8.35	2.95	8.08	3.00	7.94	3.02
							-5	10.39	2.99	10.13	3.04	9.89	3.08	9.79	3.10	9.50	3.15	9.35	3.17
							0	11.87	3.13	11.59	3.18	11.34	3.22	11.23	3.24	10.93	3.29	10.76	3.32
							2	12.46	3.19	12.18	3.24	11.92	3.28	11.81	3.30	11.50	3.35	11.32	3.38
							7	13.64	3.30	13.35	3.35	13.09	3.39	13.00	3.41	12.64	3.47	12.45	3.50
							10	14.83	3.41	14.53	3.46	14.25	3.51	14.12	3.53	13.78	3.59	13.58	3.62
							15	16.31	3.55	16.00	3.60	15.71	3.65	15.57	3.67	15.21	3.73	15.00	3.77

12. Capacity Table

12-7. AJ140TXJ5KH/EA

HEATING

Combination (Capacity Index)					Combination (Total)	Combination (%)	Outdoor Temperature (°F,DB)	Indoor Temperature (°F, DB)											
								57.2		60.8		64.4		69.98		71.6		75.2	
								TC(kbtu)	PI(kW)	TC(kbtu)	PI(kW)	TC(kbtu)	PI(kW)	TC(kbtu)	PI(kW)	TC(kbtu)	PI(kW)	TC(kbtu)	PI(kW)
2000	3500	3500	5000		14000	100%	-15	8.42	3.30	8.16	3.35	7.92	3.39	7.82	3.41	7.54	3.46	7.40	3.49
							-10	10.09	3.47	9.81	3.52	9.56	3.57	9.44	3.59	9.15	3.65	8.99	3.68
							-5	11.76	3.64	11.46	3.70	11.20	3.75	11.07	3.77	10.75	3.83	10.58	3.86
							0	13.43	3.81	13.12	3.87	12.84	3.92	12.71	3.95	12.36	4.01	12.17	4.05
							2	14.10	3.88	13.78	3.94	13.49	3.99	13.36	4.02	13.01	4.08	12.81	4.12
							7	15.44	4.02	15.11	4.08	14.81	4.13	14.71	4.15	14.30	4.22	14.09	4.26
							10	16.78	4.15	16.44	4.21	16.13	4.27	15.98	4.30	15.59	4.37	15.37	4.41
							15	18.46	4.32	18.10	4.38	17.77	4.44	17.62	4.47	17.21	4.54	16.97	4.59
2000	3500	3500	6800		15800	113%	-15	8.48	3.35	8.21	3.40	7.98	3.44	7.87	3.46	7.59	3.51	7.45	3.54
							-10	10.16	3.52	9.87	3.57	9.62	3.62	9.51	3.64	9.21	3.70	9.05	3.73
							-5	11.84	3.70	11.54	3.75	11.27	3.80	11.15	3.82	10.83	3.88	10.65	3.92
							0	13.52	3.87	13.21	3.93	12.92	3.98	12.79	4.00	12.45	4.07	12.26	4.10
							2	14.19	3.94	13.87	4.00	13.58	4.05	13.45	4.07	13.10	4.14	12.90	4.18
							7	15.54	4.07	15.21	4.13	14.91	4.19	14.81	4.21	14.40	4.29	14.19	4.33
							10	16.89	4.21	16.55	4.27	16.24	4.33	16.09	4.36	15.70	4.43	15.48	4.47
							15	18.58	4.38	18.22	4.44	17.90	4.50	17.74	4.53	17.33	4.61	17.09	4.65
2000	3500	5000	5000		15500	111%	-15	8.59	3.43	8.32	3.49	8.08	3.53	7.97	3.55	7.69	3.61	7.54	3.63
							-10	10.29	3.61	10.00	3.67	9.75	3.72	9.63	3.74	9.33	3.80	9.16	3.83
							-5	11.99	3.79	11.69	3.85	11.42	3.90	11.29	3.92	10.97	3.99	10.79	4.02
							0	13.69	3.97	13.38	4.03	13.09	4.08	12.96	4.11	12.61	4.17	12.41	4.21
							2	14.37	4.04	14.05	4.10	13.76	4.16	13.62	4.18	13.27	4.25	13.06	4.29
							7	15.74	4.18	15.41	4.24	15.10	4.30	15.00	4.32	14.58	4.40	14.37	4.44
							10	17.11	4.32	16.76	4.38	16.44	4.44	16.30	4.47	15.90	4.55	15.67	4.59
							15	18.82	4.49	18.46	4.56	18.13	4.62	17.97	4.65	17.55	4.73	17.31	4.78
2000	3500	5000	6800		17300	124%	-15	8.59	3.43	8.32	3.49	8.08	3.53	7.97	3.55	7.69	3.61	7.54	3.63
							-10	10.29	3.61	10.00	3.67	9.75	3.72	9.63	3.74	9.33	3.80	9.16	3.83
							-5	11.99	3.79	11.69	3.85	11.42	3.90	11.29	3.92	10.97	3.99	10.79	4.02
							0	13.69	3.97	13.38	4.03	13.09	4.08	12.96	4.11	12.61	4.17	12.41	4.21
							2	14.37	4.04	14.05	4.10	13.76	4.16	13.62	4.18	13.27	4.25	13.06	4.29
							7	15.74	4.18	15.41	4.24	15.10	4.30	15.00	4.32	14.58	4.40	14.37	4.44
							10	17.11	4.32	16.76	4.38	16.44	4.44	16.30	4.47	15.90	4.55	15.67	4.59
							15	18.82	4.49	18.46	4.56	18.13	4.62	17.97	4.65	17.55	4.73	17.31	4.78
2000	5000	5000	5000		17000	121%	-15	6.71	2.63	6.50	2.67	6.31	2.71	6.23	2.72	6.01	2.76	5.89	2.78
							-10	8.04	2.77	7.81	2.81	7.61	2.85	7.52	2.86	7.29	2.91	7.16	2.93
							-5	9.37	2.91	9.13	2.95	8.92	2.99	8.82	3.01	8.57	3.05	8.43	3.08
							0	10.70	3.04	10.45	3.09	10.23	3.13	10.12	3.15	9.85	3.20	9.70	3.23
							2	11.23	3.10	10.98	3.14	10.75	3.18	10.65	3.20	10.36	3.26	10.21	3.28
							7	12.30	3.20	12.04	3.25	11.80	3.29	11.72	3.31	11.39	3.37	11.23	3.40
							10	13.37	3.31	13.10	3.36	12.85	3.40	12.73	3.43	12.42	3.48	12.25	3.52
							15	14.71	3.44	14.42	3.49	14.16	3.54	14.04	3.56	13.71	3.62	13.52	3.66
2500	2500	2500	2500		10000	71%	-15	7.15	2.62	6.93	2.65	6.73	2.69	6.64	2.70	6.40	2.75	6.28	2.77
							-10	8.56	2.75	8.33	2.79	8.12	2.83	8.02	2.85	7.77	2.89	7.63	2.92
							-5	9.98	2.89	9.73	2.93	9.51	2.97	9.40	2.99	9.13	3.04	8.98	3.06
							0	11.40	3.02	11.14	3.07	10.90	3.11	10.79	3.13	10.50	3.18	10.34	3.21
							2	11.97	3.08	11.70	3.12	11.46	3.16	11.34	3.18	11.05	3.24	10.88	3.26
							7	13.11	3.18	12.83	3.23	12.57	3.27	12.49	3.29	12.14	3.35	11.96	3.38
							10	14.25	3.29	13.96	3.34	13.69	3.38	13.57	3.41	13.24	3.46	13.05	3.49
							15	15.67	3.42	15.37	3.47	15.09	3.52	14.96	3.54	14.61	3.60	14.41	3.64

12. Capacity Table

12-7. AJ140TXJ5KH/EA

HEATING

Combination (Capacity Index)					Combination (Total)	Combination (%)	Outdoor Temperature (°F,DB)	Indoor Temperature (°F, DB)											
								57.2		60.8		64.4		69.98		71.6		75.2	
								TC(kbtu)	PI(kW)	TC(kbtu)	PI(kW)	TC(kbtu)	PI(kW)	TC(kbtu)	PI(kW)	TC(kbtu)	PI(kW)	TC(kbtu)	PI(kW)
2500	2500	2500	3500		11000	79%	-15	7.33	2.70	7.10	2.74	6.90	2.77	6.81	2.79	6.57	2.83	6.44	2.85
							-10	8.78	2.84	8.54	2.88	8.32	2.92	8.22	2.93	7.97	2.98	7.83	3.00
							-5	10.24	2.98	9.98	3.02	9.75	3.06	9.64	3.08	9.37	3.13	9.21	3.15
							0	11.69	3.12	11.42	3.16	11.18	3.20	11.07	3.22	10.77	3.28	10.60	3.30
							2	12.28	3.17	12.00	3.22	11.75	3.26	11.64	3.28	11.33	3.33	11.16	3.36
							7	13.44	3.28	13.16	3.33	12.90	3.37	12.81	3.39	12.45	3.45	12.27	3.48
							10	14.61	3.39	14.31	3.44	14.04	3.49	13.92	3.51	13.58	3.57	13.39	3.60
							15	16.07	3.53	15.76	3.58	15.48	3.63	15.35	3.65	14.99	3.71	14.78	3.75
2500	2500	2500	5000		12500	89%	-15	7.73	2.75	7.49	2.79	7.27	2.83	7.17	2.84	6.92	2.89	6.79	2.91
							-10	9.26	2.89	9.00	2.94	8.77	2.98	8.67	2.99	8.39	3.04	8.25	3.07
							-5	10.79	3.04	10.52	3.08	10.27	3.12	10.16	3.14	9.87	3.19	9.71	3.22
							0	12.32	3.18	12.04	3.23	11.78	3.27	11.66	3.29	11.35	3.34	11.17	3.37
							2	12.94	3.24	12.65	3.28	12.38	3.33	12.26	3.35	11.94	3.40	11.76	3.43
							7	14.17	3.35	13.86	3.40	13.59	3.44	13.50	3.46	13.12	3.52	12.93	3.55
							10	15.40	3.46	15.09	3.51	14.80	3.56	14.67	3.58	14.31	3.64	14.11	3.68
							15	16.94	3.60	16.61	3.65	16.31	3.70	16.17	3.73	15.80	3.79	15.58	3.82
2500	2500	2500	6800		14300	102%	-15	7.21	2.64	6.99	2.68	6.79	2.71	6.70	2.73	6.46	2.77	6.34	2.79
							-10	8.64	2.78	8.40	2.82	8.19	2.86	8.09	2.87	7.84	2.92	7.70	2.94
							-5	10.07	2.91	9.82	2.96	9.59	3.00	9.49	3.02	9.21	3.06	9.06	3.09
							0	11.50	3.05	11.24	3.10	10.99	3.14	10.88	3.16	10.59	3.21	10.43	3.24
							2	12.07	3.10	11.80	3.15	11.56	3.19	11.44	3.21	11.14	3.27	10.97	3.29
							7	13.22	3.21	12.94	3.26	12.68	3.30	12.60	3.32	12.25	3.38	12.07	3.41
							10	14.37	3.32	14.08	3.37	13.81	3.41	13.69	3.44	13.36	3.49	13.17	3.53
							15	15.81	3.45	15.51	3.50	15.23	3.55	15.09	3.57	14.74	3.64	14.54	3.67
2500	2500	3500	3500		12000	86%	-15	7.44	2.71	7.21	2.75	7.00	2.79	6.91	2.80	6.67	2.85	6.54	2.87
							-10	8.91	2.85	8.67	2.90	8.45	2.93	8.35	2.95	8.08	3.00	7.94	3.02
							-5	10.39	2.99	10.13	3.04	9.89	3.08	9.79	3.10	9.50	3.15	9.35	3.17
							0	11.87	3.13	11.59	3.18	11.34	3.22	11.23	3.24	10.93	3.29	10.76	3.32
							2	12.46	3.19	12.18	3.24	11.92	3.28	11.81	3.30	11.50	3.35	11.32	3.38
							7	13.64	3.30	13.35	3.35	13.09	3.39	13.00	3.41	12.64	3.47	12.45	3.50
							10	14.83	3.41	14.53	3.46	14.25	3.51	14.12	3.53	13.78	3.59	13.58	3.62
							15	16.31	3.55	16.00	3.60	15.71	3.65	15.57	3.67	15.21	3.73	15.00	3.77
2500	2500	3500	5000		13500	96%	-15	8.14	3.08	7.89	3.12	7.66	3.16	7.56	3.18	7.29	3.23	7.15	3.26
							-10	9.75	3.24	9.48	3.29	9.24	3.33	9.13	3.35	8.84	3.40	8.69	3.43
							-5	11.36	3.40	11.08	3.45	10.82	3.49	10.71	3.51	10.40	3.57	10.23	3.60
							0	12.98	3.56	12.68	3.61	12.41	3.66	12.28	3.68	11.95	3.74	11.77	3.77
							2	13.63	3.62	13.32	3.67	13.04	3.72	12.92	3.75	12.58	3.81	12.39	3.84
							7	14.92	3.74	14.60	3.80	14.32	3.85	14.22	3.87	13.82	3.94	13.62	3.98
							10	16.22	3.87	15.89	3.93	15.59	3.98	15.45	4.01	15.07	4.07	14.86	4.11
							15	17.84	4.02	17.50	4.09	17.18	4.14	17.04	4.17	16.64	4.24	16.41	4.28
2500	2500	3500	6800		15300	109%	-15	8.26	3.16	8.00	3.21	7.77	3.25	7.66	3.27	7.39	3.32	7.25	3.35
							-10	9.89	3.33	9.61	3.38	9.37	3.42	9.26	3.44	8.97	3.50	8.81	3.53
							-5	11.52	3.49	11.23	3.55	10.97	3.59	10.86	3.61	10.54	3.67	10.37	3.70
							0	13.16	3.66	12.86	3.71	12.58	3.76	12.46	3.78	12.12	3.85	11.93	3.88
							2	13.82	3.72	13.51	3.78	13.23	3.83	13.10	3.85	12.75	3.91	12.56	3.95
							7	15.13	3.85	14.81	3.91	14.52	3.96	14.42	3.98	14.02	4.05	13.81	4.09
							10	16.45	3.98	16.11	4.04	15.81	4.09	15.67	4.12	15.29	4.19	15.07	4.23
							15	18.09	4.14	17.74	4.20	17.42	4.26	17.28	4.29	16.87	4.36	16.64	4.40

12. Capacity Table

12-7. AJ140TXJ5KH/EA

HEATING

Combination (Capacity Index)					Combination (Total)	Combination (%)	Outdoor Temperature (°F,DB)	Indoor Temperature (°F, DB)											
								57.2		60.8		64.4		69.98		71.6		75.2	
								TC(kbtu)	PI(kW)	TC(kbtu)	PI(kW)	TC(kbtu)	PI(kW)	TC(kbtu)	PI(kW)	TC(kbtu)	PI(kW)	TC(kbtu)	PI(kW)
2500	2500	5000	5000		15000	107%	-15	8.59	3.43	8.32	3.49	8.08	3.53	7.97	3.55	7.69	3.61	7.54	3.63
							-10	10.29	3.61	10.00	3.67	9.75	3.72	9.63	3.74	9.33	3.80	9.16	3.83
							-5	11.99	3.79	11.69	3.85	11.42	3.90	11.29	3.92	10.97	3.99	10.79	4.02
							0	13.69	3.97	13.38	4.03	13.09	4.08	12.96	4.11	12.61	4.17	12.41	4.21
							2	14.37	4.04	14.05	4.10	13.76	4.16	13.62	4.18	13.27	4.25	13.06	4.29
							7	15.74	4.18	15.41	4.24	15.10	4.30	15.00	4.32	14.58	4.40	14.37	4.44
							10	17.11	4.32	16.76	4.38	16.44	4.44	16.30	4.47	15.90	4.55	15.67	4.59
							15	18.82	4.49	18.46	4.56	18.13	4.62	17.97	4.65	17.55	4.73	17.31	4.78
2500	2500	5000	6800		16800	120%	-15	7.30	2.66	7.07	2.70	6.87	2.74	6.77	2.75	6.54	2.80	6.41	2.82
							-10	8.74	2.80	8.50	2.84	8.28	2.88	8.19	2.90	7.93	2.94	7.79	2.97
							-5	10.19	2.94	9.93	2.98	9.70	3.02	9.60	3.04	9.32	3.09	9.17	3.12
							0	11.64	3.08	11.37	3.12	11.13	3.17	11.01	3.19	10.72	3.24	10.55	3.27
							2	12.22	3.13	11.94	3.18	11.70	3.22	11.58	3.24	11.28	3.29	11.10	3.32
							7	13.38	3.24	13.09	3.29	12.84	3.33	12.75	3.35	12.39	3.41	12.21	3.44
							10	14.54	3.35	14.25	3.40	13.98	3.45	13.85	3.47	13.51	3.53	13.32	3.56
							15	16.00	3.48	15.69	3.54	15.41	3.58	15.27	3.61	14.92	3.67	14.71	3.70
2500	3500	3500	3500		13000	93%	-15	7.73	2.75	7.49	2.79	7.27	2.83	7.17	2.84	6.92	2.89	6.79	2.91
							-10	9.26	2.89	9.00	2.94	8.77	2.98	8.67	2.99	8.39	3.04	8.25	3.07
							-5	10.79	3.04	10.52	3.08	10.27	3.12	10.16	3.14	9.87	3.19	9.71	3.22
							0	12.32	3.18	12.04	3.23	11.78	3.27	11.66	3.29	11.35	3.34	11.17	3.37
							2	12.94	3.24	12.65	3.28	12.38	3.33	12.26	3.35	11.94	3.40	11.76	3.43
							7	14.17	3.35	13.86	3.40	13.59	3.44	13.50	3.46	13.12	3.52	12.93	3.55
							10	15.40	3.46	15.09	3.51	14.80	3.56	14.67	3.58	14.31	3.64	14.11	3.68
							15	16.94	3.60	16.61	3.65	16.31	3.70	16.17	3.73	15.80	3.79	15.58	3.82
2500	3500	3500	5000		14500	104%	-15	8.59	3.43	8.32	3.49	8.08	3.53	7.97	3.55	7.69	3.61	7.54	3.63
							-10	10.29	3.61	10.00	3.67	9.75	3.72	9.63	3.74	9.33	3.80	9.16	3.83
							-5	11.99	3.79	11.69	3.85	11.42	3.90	11.29	3.92	10.97	3.99	10.79	4.02
							0	13.69	3.97	13.38	4.03	13.09	4.08	12.96	4.11	12.61	4.17	12.41	4.21
							2	14.37	4.04	14.05	4.10	13.76	4.16	13.62	4.18	13.27	4.25	13.06	4.29
							7	15.74	4.18	15.41	4.24	15.10	4.30	15.00	4.32	14.58	4.40	14.37	4.44
							10	17.11	4.32	16.76	4.38	16.44	4.44	16.30	4.47	15.90	4.55	15.67	4.59
							15	18.82	4.49	18.46	4.56	18.13	4.62	17.97	4.65	17.55	4.73	17.31	4.78
2500	3500	3500	6800		16300	116%	-15	8.59	3.43	8.32	3.49	8.08	3.53	7.97	3.55	7.69	3.61	7.54	3.63
							-10	10.29	3.61	10.00	3.67	9.75	3.72	9.63	3.74	9.33	3.80	9.16	3.83
							-5	11.99	3.79	11.69	3.85	11.42	3.90	11.29	3.92	10.97	3.99	10.79	4.02
							0	13.69	3.97	13.38	4.03	13.09	4.08	12.96	4.11	12.61	4.17	12.41	4.21
							2	14.37	4.04	14.05	4.10	13.76	4.16	13.62	4.18	13.27	4.25	13.06	4.29
							7	15.74	4.18	15.41	4.24	15.10	4.30	15.00	4.32	14.58	4.40	14.37	4.44
							10	17.11	4.32	16.76	4.38	16.44	4.44	16.30	4.47	15.90	4.55	15.67	4.59
							15	18.82	4.49	18.46	4.56	18.13	4.62	17.97	4.65	17.55	4.73	17.31	4.78
2500	3500	5000	5000		16000	114%	-15	8.59	3.43	8.32	3.49	8.08	3.53	7.97	3.55	7.69	3.61	7.54	3.63
							-10	10.29	3.61	10.00	3.67	9.75	3.72	9.63	3.74	9.33	3.80	9.16	3.83
							-5	11.99	3.79	11.69	3.85	11.42	3.90	11.29	3.92	10.97	3.99	10.79	4.02
							0	13.69	3.97	13.38	4.03	13.09	4.08	12.96	4.11	12.61	4.17	12.41	4.21
							2	14.37	4.04	14.05	4.10	13.76	4.16	13.62	4.18	13.27	4.25	13.06	4.29
							7	15.74	4.18	15.41	4.24	15.10	4.30	15.00	4.32	14.58	4.40	14.37	4.44
							10	17.11	4.32	16.76	4.38	16.44	4.44	16.30	4.47	15.90	4.55	15.67	4.59
							15	18.82	4.49	18.46	4.56	18.13	4.62	17.97	4.65	17.55	4.73	17.31	4.78

12. Capacity Table

12-7. AJ140TXJ5KH/EA

HEATING

Combination (Capacity Index)					Combination (Total)	Combination (%)	Outdoor Temperature (°F,DB)	Indoor Temperature (°F, DB)											
								57.2		60.8		64.4		69.98		71.6		75.2	
								TC(kbtu)	PI(kW)	TC(kbtu)	PI(kW)	TC(kbtu)	PI(kW)	TC(kbtu)	PI(kW)	TC(kbtu)	PI(kW)	TC(kbtu)	PI(kW)
2500	5000	5000	5000		17500	125%	-15	7.44	2.71	7.21	2.75	7.00	2.79	6.91	2.80	6.67	2.85	6.54	2.87
							-10	8.91	2.85	8.67	2.90	8.45	2.93	8.35	2.95	8.08	3.00	7.94	3.02
							-5	10.39	2.99	10.13	3.04	9.89	3.08	9.79	3.10	9.50	3.15	9.35	3.17
							0	11.87	3.13	11.59	3.18	11.34	3.22	11.23	3.24	10.93	3.29	10.76	3.32
							2	12.46	3.19	12.18	3.24	11.92	3.28	11.81	3.30	11.50	3.35	11.32	3.38
							7	13.64	3.30	13.35	3.35	13.09	3.39	13.00	3.41	12.64	3.47	12.45	3.50
							10	14.83	3.41	14.53	3.46	14.25	3.51	14.12	3.53	13.78	3.59	13.58	3.62
							15	16.31	3.55	16.00	3.60	15.71	3.65	15.57	3.67	15.21	3.73	15.00	3.77
3500	3500	3500	3500		14000	100%	-15	8.34	3.24	8.08	3.28	7.85	3.33	7.74	3.35	7.47	3.40	7.33	3.42
							-10	9.99	3.41	9.71	3.46	9.47	3.50	9.35	3.52	9.06	3.58	8.90	3.61
							-5	11.64	3.57	11.35	3.63	11.09	3.67	10.97	3.70	10.65	3.75	10.48	3.79
							0	13.30	3.74	12.99	3.80	12.71	3.85	12.59	3.87	12.25	3.93	12.06	3.97
							2	13.96	3.81	13.65	3.86	13.36	3.91	13.23	3.94	12.89	4.00	12.69	4.04
							7	15.29	3.94	14.96	4.00	14.67	4.05	14.57	4.07	14.16	4.14	13.96	4.18
							10	16.62	4.07	16.28	4.13	15.97	4.19	15.83	4.21	15.44	4.28	15.22	4.32
							15	18.28	4.23	17.93	4.30	17.61	4.35	17.45	4.38	17.05	4.46	16.81	4.50
3500	3500	3500	5000		15500	111%	-15	8.59	3.43	8.32	3.49	8.08	3.53	7.97	3.55	7.69	3.61	7.54	3.63
							-10	10.29	3.61	10.00	3.67	9.75	3.72	9.63	3.74	9.33	3.80	9.16	3.83
							-5	11.99	3.79	11.69	3.85	11.42	3.90	11.29	3.92	10.97	3.99	10.79	4.02
							0	13.69	3.97	13.38	4.03	13.09	4.08	12.96	4.11	12.61	4.17	12.41	4.21
							2	14.37	4.04	14.05	4.10	13.76	4.16	13.62	4.18	13.27	4.25	13.06	4.29
							7	15.74	4.18	15.41	4.24	15.10	4.30	15.00	4.32	14.58	4.40	14.37	4.44
							10	17.11	4.32	16.76	4.38	16.44	4.44	16.30	4.47	15.90	4.55	15.67	4.59
							15	18.82	4.49	18.46	4.56	18.13	4.62	17.97	4.65	17.55	4.73	17.31	4.78
3500	3500	3500	6800		17300	124%	-15	8.59	3.43	8.32	3.49	8.08	3.53	7.97	3.55	7.69	3.61	7.54	3.63
							-10	10.29	3.61	10.00	3.67	9.75	3.72	9.63	3.74	9.33	3.80	9.16	3.83
							-5	11.99	3.79	11.69	3.85	11.42	3.90	11.29	3.92	10.97	3.99	10.79	4.02
							0	13.69	3.97	13.38	4.03	13.09	4.08	12.96	4.11	12.61	4.17	12.41	4.21
							2	14.37	4.04	14.05	4.10	13.76	4.16	13.62	4.18	13.27	4.25	13.06	4.29
							7	15.74	4.18	15.41	4.24	15.10	4.30	15.00	4.32	14.58	4.40	14.37	4.44
							10	17.11	4.32	16.76	4.38	16.44	4.44	16.30	4.47	15.90	4.55	15.67	4.59
							15	18.82	4.49	18.46	4.56	18.13	4.62	17.97	4.65	17.55	4.73	17.31	4.78
2000	2000	2000	2000	2000	10000	71%	-15	6.30	2.52	6.10	2.56	5.92	2.59	5.85	2.61	5.64	2.65	5.53	2.67
							-10	7.54	2.65	7.33	2.69	7.15	2.73	7.06	2.74	6.84	2.79	6.72	2.81
							-5	8.79	2.78	8.57	2.82	8.37	2.86	8.28	2.88	8.04	2.92	7.91	2.95
							0	10.04	2.91	9.81	2.96	9.60	3.00	9.50	3.01	9.25	3.06	9.10	3.09
							2	10.54	2.96	10.30	3.01	10.09	3.05	9.99	3.07	9.73	3.12	9.58	3.15
							7	11.54	3.07	11.30	3.11	11.07	3.16	11.00	3.17	10.69	3.23	10.54	3.26
							10	12.55	3.17	12.29	3.22	12.06	3.26	11.95	3.28	11.66	3.34	11.49	3.37
							15	13.80	3.30	13.54	3.35	13.29	3.39	13.18	3.41	12.87	3.47	12.69	3.50
2000	2000	2000	2000	2500	10500	75%	-15	6.87	2.69	6.65	2.73	6.46	2.76	6.38	2.78	6.15	2.82	6.04	2.84
							-10	8.23	2.83	8.00	2.87	7.80	2.91	7.70	2.92	7.46	2.97	7.33	2.99
							-5	9.59	2.97	9.35	3.01	9.13	3.05	9.03	3.07	8.77	3.12	8.63	3.15
							0	10.95	3.11	10.70	3.15	10.47	3.19	10.37	3.21	10.09	3.27	9.93	3.29
							2	11.50	3.16	11.24	3.21	11.01	3.25	10.90	3.27	10.61	3.32	10.45	3.35
							7	12.59	3.27	12.32	3.32	12.08	3.36	12.00	3.38	11.67	3.44	11.49	3.47
							10	13.69	3.38	13.41	3.43	13.15	3.48	13.04	3.50	12.72	3.56	12.54	3.59
							15	15.06	3.52	14.77	3.57	14.50	3.62	14.38	3.64	14.04	3.70	13.85	3.74

12. Capacity Table

12-7. AJ140TXJ5KH/EA

HEATING

Combination (Capacity Index)					Combination (Total)	Combination (%)	Outdoor Temperature (°F,DB)	Indoor Temperature (°F, DB)											
								57.2		60.8		64.4		69.98		71.6		75.2	
								TC(kbtu)	PI(kW)	TC(kbtu)	PI(kW)	TC(kbtu)	PI(kW)	TC(kbtu)	PI(kW)	TC(kbtu)	PI(kW)	TC(kbtu)	PI(kW)
2000	2000	2000	2000	3500	11500	82%	-15	7.33	2.66	7.10	2.69	6.89	2.73	6.80	2.75	6.56	2.79	6.44	2.81
							-10	8.78	2.79	8.53	2.84	8.32	2.87	8.22	2.89	7.96	2.93	7.82	2.96
							-5	10.23	2.93	9.97	2.98	9.74	3.02	9.64	3.03	9.36	3.08	9.21	3.11
							0	11.68	3.07	11.41	3.11	11.17	3.16	11.06	3.18	10.76	3.23	10.59	3.26
							2	12.27	3.12	11.99	3.17	11.74	3.21	11.63	3.23	11.32	3.28	11.15	3.31
							7	13.43	3.23	13.15	3.28	12.89	3.32	12.80	3.34	12.44	3.40	12.26	3.43
							10	14.60	3.34	14.30	3.39	14.03	3.44	13.91	3.46	13.57	3.51	13.37	3.55
							15	16.06	3.47	15.75	3.53	15.47	3.57	15.33	3.60	14.98	3.66	14.77	3.69
2000	2000	2000	2000	5000	13000	93%	-15	7.73	2.75	7.49	2.79	7.27	2.83	7.17	2.84	6.92	2.89	6.79	2.91
							-10	9.26	2.89	9.00	2.94	8.77	2.98	8.67	2.99	8.39	3.04	8.25	3.07
							-5	10.79	3.04	10.52	3.08	10.27	3.12	10.16	3.14	9.87	3.19	9.71	3.22
							0	12.32	3.18	12.04	3.23	11.78	3.27	11.66	3.29	11.35	3.34	11.17	3.37
							2	12.94	3.24	12.65	3.28	12.38	3.33	12.26	3.35	11.94	3.40	11.76	3.43
							7	14.17	3.35	13.86	3.40	13.59	3.44	13.50	3.46	13.12	3.52	12.93	3.55
							10	15.40	3.46	15.09	3.51	14.80	3.56	14.67	3.58	14.31	3.64	14.11	3.68
							15	16.94	3.60	16.61	3.65	16.31	3.70	16.17	3.73	15.80	3.79	15.58	3.82
2000	2000	2000	2000	6800	14800	106%	-15	8.49	3.33	8.22	3.38	7.99	3.42	7.88	3.44	7.60	3.50	7.46	3.53
							-10	10.17	3.51	9.89	3.56	9.64	3.60	9.52	3.63	9.22	3.68	9.06	3.71
							-5	11.85	3.68	11.55	3.73	11.29	3.78	11.16	3.81	10.84	3.87	10.66	3.90
							0	13.54	3.85	13.22	3.91	12.94	3.96	12.81	3.98	12.47	4.05	12.27	4.08
							2	14.21	3.92	13.89	3.98	13.60	4.03	13.47	4.05	13.12	4.12	12.92	4.16
							7	15.56	4.05	15.23	4.12	14.93	4.17	14.83	4.19	14.42	4.27	14.21	4.30
							10	16.92	4.19	16.57	4.25	16.26	4.31	16.11	4.34	15.72	4.41	15.50	4.45
							15	18.61	4.36	18.25	4.42	17.92	4.48	17.77	4.51	17.35	4.59	17.11	4.63
2000	2000	2000	2500	2500	11000	79%	-15	7.44	2.62	7.21	2.66	7.00	2.70	6.91	2.71	6.67	2.75	6.54	2.78
							-10	8.91	2.76	8.67	2.80	8.45	2.84	8.35	2.86	8.08	2.90	7.94	2.92
							-5	10.39	2.90	10.13	2.94	9.89	2.98	9.79	3.00	9.50	3.04	9.35	3.07
							0	11.87	3.03	11.59	3.08	11.34	3.12	11.23	3.14	10.93	3.19	10.76	3.22
							2	12.46	3.09	12.18	3.13	11.92	3.17	11.81	3.19	11.50	3.25	11.32	3.27
							7	13.64	3.19	13.35	3.24	13.09	3.28	13.00	3.30	12.64	3.36	12.45	3.39
							10	14.83	3.30	14.53	3.35	14.25	3.39	14.12	3.42	13.78	3.47	13.58	3.51
							15	16.31	3.43	16.00	3.48	15.71	3.53	15.57	3.55	15.21	3.61	15.00	3.65
2000	2000	2000	2500	3500	12000	86%	-15	7.73	2.75	7.49	2.79	7.27	2.83	7.17	2.84	6.92	2.89	6.79	2.91
							-10	9.26	2.89	9.00	2.94	8.77	2.98	8.67	2.99	8.39	3.04	8.25	3.07
							-5	10.79	3.04	10.52	3.08	10.27	3.12	10.16	3.14	9.87	3.19	9.71	3.22
							0	12.32	3.18	12.04	3.23	11.78	3.27	11.66	3.29	11.35	3.34	11.17	3.37
							2	12.94	3.24	12.65	3.28	12.38	3.33	12.26	3.35	11.94	3.40	11.76	3.43
							7	14.17	3.35	13.86	3.40	13.59	3.44	13.50	3.46	13.12	3.52	12.93	3.55
							10	15.40	3.46	15.09	3.51	14.80	3.56	14.67	3.58	14.31	3.64	14.11	3.68
							15	16.94	3.60	16.61	3.65	16.31	3.70	16.17	3.73	15.80	3.79	15.58	3.82
2000	2000	2000	2500	5000	13500	96%	-15	8.02	2.97	7.77	3.01	7.55	3.05	7.44	3.07	7.18	3.11	7.05	3.14
							-10	9.61	3.12	9.34	3.17	9.10	3.21	8.99	3.23	8.71	3.28	8.56	3.31
							-5	11.20	3.27	10.92	3.32	10.66	3.37	10.55	3.39	10.24	3.44	10.08	3.47
							0	12.79	3.43	12.49	3.48	12.23	3.52	12.10	3.55	11.78	3.60	11.59	3.64
							2	13.43	3.49	13.12	3.54	12.85	3.59	12.73	3.61	12.39	3.67	12.20	3.70
							7	14.70	3.61	14.39	3.66	14.10	3.71	14.01	3.73	13.62	3.80	13.42	3.83
							10	15.98	3.73	15.65	3.79	15.36	3.84	15.22	3.86	14.85	3.92	14.64	3.96
							15	17.58	3.88	17.24	3.94	16.93	3.99	16.78	4.02	16.39	4.08	16.17	4.12

12. Capacity Table

12-7. AJ140TXJ5KH/EA

HEATING

Combination (Capacity Index)					Combination (Total)	Combination (%)	Outdoor Temperature (°F,DB)	Indoor Temperature (°F, DB)											
								57.2		60.8		64.4		69.98		71.6		75.2	
								TC(kbtu)	PI(kW)	TC(kbtu)	PI(kW)	TC(kbtu)	PI(kW)	TC(kbtu)	PI(kW)	TC(kbtu)	PI(kW)	TC(kbtu)	PI(kW)
2000	2000	2000	2500	6800	15300	109%	-15	8.59	3.40	8.32	3.45	8.08	3.50	7.97	3.52	7.69	3.57	7.54	3.60
							-10	10.29	3.58	10.00	3.63	9.75	3.68	9.63	3.70	9.33	3.76	9.16	3.79
							-5	11.99	3.76	11.69	3.81	11.42	3.86	11.29	3.89	10.97	3.95	10.79	3.98
							0	13.69	3.93	13.38	3.99	13.09	4.04	12.96	4.07	12.61	4.13	12.41	4.17
							2	14.37	4.00	14.05	4.06	13.76	4.12	13.62	4.14	13.27	4.21	13.06	4.25
							7	15.74	4.14	15.41	4.20	15.10	4.26	15.00	4.28	14.58	4.36	14.37	4.40
							10	17.11	4.28	16.76	4.34	16.44	4.40	16.30	4.43	15.90	4.50	15.67	4.55
							15	18.82	4.45	18.46	4.52	18.13	4.58	17.97	4.61	17.55	4.69	17.31	4.73
2000	2000	2000	3500	3500	13000	93%	-15	7.73	2.75	7.49	2.79	7.27	2.83	7.17	2.84	6.92	2.89	6.79	2.91
							-10	9.26	2.89	9.00	2.94	8.77	2.98	8.67	2.99	8.39	3.04	8.25	3.07
							-5	10.79	3.04	10.52	3.08	10.27	3.12	10.16	3.14	9.87	3.19	9.71	3.22
							0	12.32	3.18	12.04	3.23	11.78	3.27	11.66	3.29	11.35	3.34	11.17	3.37
							2	12.94	3.24	12.65	3.28	12.38	3.33	12.26	3.35	11.94	3.40	11.76	3.43
							7	14.17	3.35	13.86	3.40	13.59	3.44	13.50	3.46	13.12	3.52	12.93	3.55
							10	15.40	3.46	15.09	3.51	14.80	3.56	14.67	3.58	14.31	3.64	14.11	3.68
							15	16.94	3.60	16.61	3.65	16.31	3.70	16.17	3.73	15.80	3.79	15.58	3.82
2000	2000	2000	3500	5000	14500	104%	-15	8.39	3.25	8.13	3.30	7.90	3.34	7.79	3.36	7.52	3.41	7.37	3.44
							-10	10.05	3.42	9.77	3.47	9.53	3.52	9.41	3.54	9.12	3.59	8.96	3.62
							-5	11.72	3.59	11.42	3.64	11.16	3.69	11.04	3.71	10.72	3.77	10.54	3.81
							0	13.38	3.76	13.07	3.81	12.79	3.87	12.66	3.89	12.32	3.95	12.13	3.99
							2	14.05	3.82	13.73	3.88	13.45	3.93	13.32	3.96	12.96	4.02	12.77	4.06
							7	15.38	3.96	15.06	4.02	14.76	4.07	14.66	4.09	14.25	4.16	14.04	4.20
							10	16.72	4.09	16.38	4.15	16.07	4.21	15.93	4.23	15.54	4.30	15.32	4.34
							15	18.40	4.25	18.04	4.32	17.71	4.38	17.56	4.40	17.15	4.48	16.92	4.52
2000	2000	2000	3500	6800	16300	116%	-15	8.59	3.40	8.32	3.45	8.08	3.50	7.97	3.52	7.69	3.57	7.54	3.60
							-10	10.29	3.58	10.00	3.63	9.75	3.68	9.63	3.70	9.33	3.76	9.16	3.79
							-5	11.99	3.76	11.69	3.81	11.42	3.86	11.29	3.89	10.97	3.95	10.79	3.98
							0	13.69	3.93	13.38	3.99	13.09	4.04	12.96	4.07	12.61	4.13	12.41	4.17
							2	14.37	4.00	14.05	4.06	13.76	4.12	13.62	4.14	13.27	4.21	13.06	4.25
							7	15.74	4.14	15.41	4.20	15.10	4.26	15.00	4.28	14.58	4.36	14.37	4.40
							10	17.11	4.28	16.76	4.34	16.44	4.40	16.30	4.43	15.90	4.50	15.67	4.55
							15	18.82	4.45	18.46	4.52	18.13	4.58	17.97	4.61	17.55	4.69	17.31	4.73
2000	2000	2000	5000	5000	16000	114%	-15	8.59	3.40	8.32	3.45	8.08	3.50	7.97	3.52	7.69	3.57	7.54	3.60
							-10	10.29	3.58	10.00	3.63	9.75	3.68	9.63	3.70	9.33	3.76	9.16	3.79
							-5	11.99	3.76	11.69	3.81	11.42	3.86	11.29	3.89	10.97	3.95	10.79	3.98
							0	13.69	3.93	13.38	3.99	13.09	4.04	12.96	4.07	12.61	4.13	12.41	4.17
							2	14.37	4.00	14.05	4.06	13.76	4.12	13.62	4.14	13.27	4.21	13.06	4.25
							7	15.74	4.14	15.41	4.20	15.10	4.26	15.00	4.28	14.58	4.36	14.37	4.40
							10	17.11	4.28	16.76	4.34	16.44	4.40	16.30	4.43	15.90	4.50	15.67	4.55
							15	18.82	4.45	18.46	4.52	18.13	4.58	17.97	4.61	17.55	4.69	17.31	4.73
2000	2000	2500	2500	2500	11500	82%	-15	7.73	2.75	7.49	2.79	7.27	2.83	7.17	2.84	6.92	2.89	6.79	2.91
							-10	9.26	2.89	9.00	2.94	8.77	2.98	8.67	2.99	8.39	3.04	8.25	3.07
							-5	10.79	3.04	10.52	3.08	10.27	3.12	10.16	3.14	9.87	3.19	9.71	3.22
							0	12.32	3.18	12.04	3.23	11.78	3.27	11.66	3.29	11.35	3.34	11.17	3.37
							2	12.94	3.24	12.65	3.28	12.38	3.33	12.26	3.35	11.94	3.40	11.76	3.43
							7	14.17	3.35	13.86	3.40	13.59	3.44	13.50	3.46	13.12	3.52	12.93	3.55
							10	15.40	3.46	15.09	3.51	14.80	3.56	14.67	3.58	14.31	3.64	14.11	3.68
							15	16.94	3.60	16.61	3.65	16.31	3.70	16.17	3.73	15.80	3.79	15.58	3.82

12. Capacity Table

12-7. AJ140TXJ5KH/EA

HEATING

Combination (Capacity Index)					Combination (Total)	Combination (%)	Outdoor Temperature (°F,DB)	Indoor Temperature (°F, DB)											
								57.2		60.8		64.4		69.98		71.6		75.2	
								TC(kbtu)	PI(kW)	TC(kbtu)	PI(kW)	TC(kbtu)	PI(kW)	TC(kbtu)	PI(kW)	TC(kbtu)	PI(kW)	TC(kbtu)	PI(kW)
2000	2000	2500	2500	3500	12500	89%	-15	7.73	2.75	7.49	2.79	7.27	2.83	7.17	2.84	6.92	2.89	6.79	2.91
							-10	9.26	2.89	9.00	2.94	8.77	2.98	8.67	2.99	8.39	3.04	8.25	3.07
							-5	10.79	3.04	10.52	3.08	10.27	3.12	10.16	3.14	9.87	3.19	9.71	3.22
							0	12.32	3.18	12.04	3.23	11.78	3.27	11.66	3.29	11.35	3.34	11.17	3.37
							2	12.94	3.24	12.65	3.28	12.38	3.33	12.26	3.35	11.94	3.40	11.76	3.43
							7	14.17	3.35	13.86	3.40	13.59	3.44	13.50	3.46	13.12	3.52	12.93	3.55
							10	15.40	3.46	15.09	3.51	14.80	3.56	14.67	3.58	14.31	3.64	14.11	3.68
							15	16.94	3.60	16.61	3.65	16.31	3.70	16.17	3.73	15.80	3.79	15.58	3.82
2000	2000	2500	2500	5000	14000	100%	-15	8.26	3.16	8.00	3.20	7.77	3.24	7.67	3.26	7.40	3.31	7.26	3.34
							-10	9.90	3.32	9.62	3.37	9.38	3.41	9.26	3.44	8.97	3.49	8.82	3.52
							-5	11.53	3.49	11.24	3.54	10.98	3.58	10.86	3.61	10.55	3.66	10.38	3.69
							0	13.17	3.65	12.87	3.70	12.59	3.75	12.47	3.77	12.13	3.84	11.94	3.87
							2	13.83	3.71	13.52	3.77	13.24	3.82	13.11	3.84	12.76	3.90	12.57	3.94
							7	15.14	3.84	14.82	3.90	14.53	3.95	14.43	3.97	14.03	4.04	13.82	4.08
							10	16.46	3.97	16.12	4.03	15.82	4.08	15.68	4.11	15.30	4.18	15.08	4.22
							15	18.11	4.13	17.76	4.19	17.44	4.25	17.29	4.27	16.88	4.35	16.65	4.39
2000	2000	2500	2500	6800	15800	113%	-15	8.59	3.40	8.32	3.45	8.08	3.50	7.97	3.52	7.69	3.57	7.54	3.60
							-10	10.29	3.58	10.00	3.63	9.75	3.68	9.63	3.70	9.33	3.76	9.16	3.79
							-5	11.99	3.76	11.69	3.81	11.42	3.86	11.29	3.89	10.97	3.95	10.79	3.98
							0	13.69	3.93	13.38	3.99	13.09	4.04	12.96	4.07	12.61	4.13	12.41	4.17
							2	14.37	4.00	14.05	4.06	13.76	4.12	13.62	4.14	13.27	4.21	13.06	4.25
							7	15.74	4.14	15.41	4.20	15.10	4.26	15.00	4.28	14.58	4.36	14.37	4.40
							10	17.11	4.28	16.76	4.34	16.44	4.40	16.30	4.43	15.90	4.50	15.67	4.55
							15	18.82	4.45	18.46	4.52	18.13	4.58	17.97	4.61	17.55	4.69	17.31	4.73
2000	2000	2500	3500	3500	13500	96%	-15	7.92	2.89	7.67	2.94	7.45	2.97	7.35	2.99	7.10	3.04	6.96	3.06
							-10	9.49	3.05	9.23	3.09	8.99	3.13	8.89	3.15	8.61	3.20	8.46	3.23
							-5	11.06	3.20	10.78	3.24	10.53	3.29	10.42	3.31	10.12	3.36	9.95	3.39
							0	12.63	3.34	12.34	3.39	12.08	3.44	11.96	3.46	11.63	3.52	11.45	3.55
							2	13.26	3.40	12.96	3.45	12.70	3.50	12.57	3.52	12.24	3.58	12.05	3.61
							7	14.52	3.52	14.21	3.57	13.93	3.62	13.84	3.64	13.45	3.71	13.26	3.74
							10	15.79	3.64	15.47	3.69	15.17	3.74	15.04	3.77	14.67	3.83	14.46	3.87
							15	17.37	3.79	17.03	3.84	16.72	3.89	16.58	3.92	16.19	3.99	15.97	4.02
2000	2000	2500	3500	5000	15000	107%	-15	8.57	3.39	8.30	3.44	8.06	3.48	7.95	3.50	7.68	3.56	7.53	3.58
							-10	10.27	3.56	9.98	3.62	9.73	3.66	9.61	3.69	9.31	3.74	9.15	3.77
							-5	11.96	3.74	11.66	3.80	11.39	3.85	11.27	3.87	10.94	3.93	10.77	3.96
							0	13.66	3.91	13.35	3.97	13.06	4.03	12.93	4.05	12.58	4.12	12.39	4.15
							2	14.35	3.98	14.02	4.04	13.73	4.10	13.60	4.12	13.24	4.19	13.04	4.23
							7	15.71	4.12	15.37	4.18	15.07	4.24	14.97	4.26	14.55	4.34	14.34	4.38
							10	17.07	4.26	16.73	4.32	16.41	4.38	16.26	4.41	15.87	4.48	15.64	4.52
							15	18.78	4.43	18.42	4.50	18.09	4.56	17.93	4.59	17.51	4.66	17.27	4.71
2000	2000	2500	3500	6800	16800	120%	-15	8.59	3.40	8.32	3.45	8.08	3.50	7.97	3.52	7.69	3.57	7.54	3.60
							-10	10.29	3.58	10.00	3.63	9.75	3.68	9.63	3.70	9.33	3.76	9.16	3.79
							-5	11.99	3.76	11.69	3.81	11.42	3.86	11.29	3.89	10.97	3.95	10.79	3.98
							0	13.69	3.93	13.38	3.99	13.09	4.04	12.96	4.07	12.61	4.13	12.41	4.17
							2	14.37	4.00	14.05	4.06	13.76	4.12	13.62	4.14	13.27	4.21	13.06	4.25
							7	15.74	4.14	15.41	4.20	15.10	4.26	15.00	4.28	14.58	4.36	14.37	4.40
							10	17.11	4.28	16.76	4.34	16.44	4.40	16.30	4.43	15.90	4.50	15.67	4.55
							15	18.82	4.45	18.46	4.52	18.13	4.58	17.97	4.61	17.55	4.69	17.31	4.73

12. Capacity Table

12-7. AJ140TXJ5KH/EA

HEATING

Combination (Capacity Index)					Combination (Total)	Combination (%)	Outdoor Temperature (°F,DB)	Indoor Temperature (°F, DB)											
								57.2		60.8		64.4		69.98		71.6		75.2	
								TC(kbtu)	PI(kW)	TC(kbtu)	PI(kW)	TC(kbtu)	PI(kW)	TC(kbtu)	PI(kW)	TC(kbtu)	PI(kW)	TC(kbtu)	PI(kW)
2000	2000	2500	5000	5000	16500	118%	-15	8.59	3.40	8.32	3.45	8.08	3.50	7.97	3.52	7.69	3.57	7.54	3.60
							-10	10.29	3.58	10.00	3.63	9.75	3.68	9.63	3.70	9.33	3.76	9.16	3.79
							-5	11.99	3.76	11.69	3.81	11.42	3.86	11.29	3.89	10.97	3.95	10.79	3.98
							0	13.69	3.93	13.38	3.99	13.09	4.04	12.96	4.07	12.61	4.13	12.41	4.17
							2	14.37	4.00	14.05	4.06	13.76	4.12	13.62	4.14	13.27	4.21	13.06	4.25
							7	15.74	4.14	15.41	4.20	15.10	4.26	15.00	4.28	14.58	4.36	14.37	4.40
							10	17.11	4.28	16.76	4.34	16.44	4.40	16.30	4.43	15.90	4.50	15.67	4.55
							15	18.82	4.45	18.46	4.52	18.13	4.58	17.97	4.61	17.55	4.69	17.31	4.73
2000	2000	3500	3500	3500	14500	104%	-15	8.32	3.20	8.06	3.25	7.83	3.29	7.73	3.31	7.46	3.36	7.31	3.39
							-10	9.97	3.37	9.69	3.42	9.45	3.47	9.33	3.49	9.04	3.54	8.88	3.57
							-5	11.62	3.54	11.33	3.59	11.07	3.64	10.95	3.66	10.63	3.72	10.46	3.75
							0	13.27	3.70	12.97	3.76	12.69	3.81	12.56	3.83	12.22	3.89	12.03	3.93
							2	13.93	3.77	13.62	3.83	13.34	3.88	13.21	3.90	12.86	3.96	12.66	4.00
							7	15.26	3.90	14.93	3.96	14.64	4.01	14.54	4.03	14.13	4.10	13.93	4.14
							10	16.58	4.03	16.25	4.09	15.94	4.15	15.80	4.17	15.41	4.24	15.19	4.28
							15	18.24	4.19	17.89	4.25	17.57	4.31	17.42	4.34	17.01	4.41	16.78	4.46
2000	2000	3500	3500	5000	16000	114%	-15	8.59	3.40	8.32	3.45	8.08	3.50	7.97	3.52	7.69	3.57	7.54	3.60
							-10	10.29	3.58	10.00	3.63	9.75	3.68	9.63	3.70	9.33	3.76	9.16	3.79
							-5	11.99	3.76	11.69	3.81	11.42	3.86	11.29	3.89	10.97	3.95	10.79	3.98
							0	13.69	3.93	13.38	3.99	13.09	4.04	12.96	4.07	12.61	4.13	12.41	4.17
							2	14.37	4.00	14.05	4.06	13.76	4.12	13.62	4.14	13.27	4.21	13.06	4.25
							7	15.74	4.14	15.41	4.20	15.10	4.26	15.00	4.28	14.58	4.36	14.37	4.40
							10	17.11	4.28	16.76	4.34	16.44	4.40	16.30	4.43	15.90	4.50	15.67	4.55
							15	18.82	4.45	18.46	4.52	18.13	4.58	17.97	4.61	17.55	4.69	17.31	4.73
2000	2000	3500	5000	5000	17500	125%	-15	8.59	3.40	8.32	3.45	8.08	3.50	7.97	3.52	7.69	3.57	7.54	3.60
							-10	10.29	3.58	10.00	3.63	9.75	3.68	9.63	3.70	9.33	3.76	9.16	3.79
							-5	11.99	3.76	11.69	3.81	11.42	3.86	11.29	3.89	10.97	3.95	10.79	3.98
							0	13.69	3.93	13.38	3.99	13.09	4.04	12.96	4.07	12.61	4.13	12.41	4.17
							2	14.37	4.00	14.05	4.06	13.76	4.12	13.62	4.14	13.27	4.21	13.06	4.25
							7	15.74	4.14	15.41	4.20	15.10	4.26	15.00	4.28	14.58	4.36	14.37	4.40
							10	17.11	4.28	16.76	4.34	16.44	4.40	16.30	4.43	15.90	4.50	15.67	4.55
							15	18.82	4.45	18.46	4.52	18.13	4.58	17.97	4.61	17.55	4.69	17.31	4.73
2000	2500	2500	2500	2500	12000	86%	-15	7.73	2.75	7.49	2.79	7.27	2.83	7.17	2.84	6.92	2.89	6.79	2.91
							-10	9.26	2.89	9.00	2.94	8.77	2.98	8.67	2.99	8.39	3.04	8.25	3.07
							-5	10.79	3.04	10.52	3.08	10.27	3.12	10.16	3.14	9.87	3.19	9.71	3.22
							0	12.32	3.18	12.04	3.23	11.78	3.27	11.66	3.29	11.35	3.34	11.17	3.37
							2	12.94	3.24	12.65	3.28	12.38	3.33	12.26	3.35	11.94	3.40	11.76	3.43
							7	14.17	3.35	13.86	3.40	13.59	3.44	13.50	3.46	13.12	3.52	12.93	3.55
							10	15.40	3.46	15.09	3.51	14.80	3.56	14.67	3.58	14.31	3.64	14.11	3.68
							15	16.94	3.60	16.61	3.65	16.31	3.70	16.17	3.73	15.80	3.79	15.58	3.82
2000	2500	2500	2500	3500	13000	93%	-15	7.83	2.82	7.58	2.86	7.36	2.90	7.26	2.92	7.01	2.96	6.87	2.99
							-10	9.37	2.97	9.11	3.01	8.88	3.05	8.78	3.07	8.50	3.12	8.35	3.15
							-5	10.92	3.12	10.65	3.16	10.40	3.20	10.29	3.22	9.99	3.28	9.83	3.30
							0	12.48	3.26	12.19	3.31	11.93	3.35	11.81	3.38	11.49	3.43	11.31	3.46
							2	13.10	3.32	12.81	3.37	12.54	3.41	12.42	3.44	12.09	3.49	11.91	3.52
							7	14.35	3.44	14.04	3.49	13.76	3.53	13.67	3.55	13.29	3.61	13.09	3.65
							10	15.59	3.55	15.28	3.60	14.99	3.65	14.85	3.67	14.49	3.74	14.28	3.77
							15	17.15	3.69	16.82	3.75	16.52	3.80	16.38	3.82	15.99	3.89	15.77	3.92

12. Capacity Table

12-7. AJ140TXJ5KH/EA

HEATING

Combination (Capacity Index)					Combination (Total)	Combination (%)	Outdoor Temperature (°F,DB)	Indoor Temperature (°F, DB)											
								57.2		60.8		64.4		69.98		71.6		75.2	
								TC(kbtu)	PI(kW)	TC(kbtu)	PI(kW)	TC(kbtu)	PI(kW)	TC(kbtu)	PI(kW)	TC(kbtu)	PI(kW)	TC(kbtu)	PI(kW)
2000	2500	2500	2500	5000	14500	104%	-15	8.52	3.35	8.26	3.40	8.02	3.45	7.91	3.47	7.64	3.52	7.49	3.55
							-10	10.21	3.53	9.93	3.58	9.67	3.63	9.56	3.65	9.26	3.71	9.10	3.74
							-5	11.90	3.70	11.60	3.76	11.33	3.81	11.21	3.83	10.89	3.89	10.71	3.93
							0	13.59	3.88	13.28	3.94	12.99	3.99	12.86	4.01	12.52	4.08	12.32	4.11
							2	14.27	3.95	13.95	4.01	13.66	4.06	13.52	4.08	13.17	4.15	12.97	4.19
							7	15.63	4.08	15.29	4.14	14.99	4.20	14.89	4.22	14.47	4.30	14.26	4.34
							10	16.98	4.22	16.64	4.28	16.32	4.34	16.18	4.37	15.78	4.44	15.56	4.48
							15	18.68	4.39	18.32	4.45	17.99	4.52	17.84	4.54	17.42	4.62	17.18	4.67
2000	2500	2500	2500	6800	16300	116%	-15	8.59	3.40	8.32	3.45	8.08	3.50	7.97	3.52	7.69	3.57	7.54	3.60
							-10	10.29	3.58	10.00	3.63	9.75	3.68	9.63	3.70	9.33	3.76	9.16	3.79
							-5	11.99	3.76	11.69	3.81	11.42	3.86	11.29	3.89	10.97	3.95	10.79	3.98
							0	13.69	3.93	13.38	3.99	13.09	4.04	12.96	4.07	12.61	4.13	12.41	4.17
							2	14.37	4.00	14.05	4.06	13.76	4.12	13.62	4.14	13.27	4.21	13.06	4.25
							7	15.74	4.14	15.41	4.20	15.10	4.26	15.00	4.28	14.58	4.36	14.37	4.40
							10	17.11	4.28	16.76	4.34	16.44	4.40	16.30	4.43	15.90	4.50	15.67	4.55
							15	18.82	4.45	18.46	4.52	18.13	4.58	17.97	4.61	17.55	4.69	17.31	4.73
2000	2500	2500	3500	3500	14000	100%	-15	8.18	3.09	7.92	3.14	7.70	3.18	7.59	3.20	7.33	3.25	7.19	3.27
							-10	9.80	3.25	9.53	3.30	9.28	3.35	9.17	3.37	8.89	3.42	8.73	3.45
							-5	11.42	3.42	11.13	3.47	10.88	3.51	10.76	3.53	10.45	3.59	10.28	3.62
							0	13.04	3.57	12.74	3.63	12.47	3.68	12.34	3.70	12.01	3.76	11.83	3.79
							2	13.69	3.64	13.39	3.69	13.11	3.74	12.98	3.76	12.64	3.83	12.45	3.86
							7	15.00	3.76	14.68	3.82	14.39	3.87	14.29	3.89	13.89	3.96	13.69	4.00
							10	16.30	3.89	15.97	3.95	15.67	4.00	15.52	4.03	15.15	4.09	14.93	4.13
							15	17.93	4.05	17.58	4.11	17.27	4.16	17.12	4.19	16.72	4.26	16.49	4.30
2000	2500	2500	3500	5000	15500	111%	-15	8.59	3.40	8.32	3.45	8.08	3.50	7.97	3.52	7.69	3.57	7.54	3.60
							-10	10.29	3.58	10.00	3.63	9.75	3.68	9.63	3.70	9.33	3.76	9.16	3.79
							-5	11.99	3.76	11.69	3.81	11.42	3.86	11.29	3.89	10.97	3.95	10.79	3.98
							0	13.69	3.93	13.38	3.99	13.09	4.04	12.96	4.07	12.61	4.13	12.41	4.17
							2	14.37	4.00	14.05	4.06	13.76	4.12	13.62	4.14	13.27	4.21	13.06	4.25
							7	15.74	4.14	15.41	4.20	15.10	4.26	15.00	4.28	14.58	4.36	14.37	4.40
							10	17.11	4.28	16.76	4.34	16.44	4.40	16.30	4.43	15.90	4.50	15.67	4.55
							15	18.82	4.45	18.46	4.52	18.13	4.58	17.97	4.61	17.55	4.69	17.31	4.73
2000	2500	2500	3500	6800	17300	124%	-15	8.59	3.40	8.32	3.45	8.08	3.50	7.97	3.52	7.69	3.57	7.54	3.60
							-10	10.29	3.58	10.00	3.63	9.75	3.68	9.63	3.70	9.33	3.76	9.16	3.79
							-5	11.99	3.76	11.69	3.81	11.42	3.86	11.29	3.89	10.97	3.95	10.79	3.98
							0	13.69	3.93	13.38	3.99	13.09	4.04	12.96	4.07	12.61	4.13	12.41	4.17
							2	14.37	4.00	14.05	4.06	13.76	4.12	13.62	4.14	13.27	4.21	13.06	4.25
							7	15.74	4.14	15.41	4.20	15.10	4.26	15.00	4.28	14.58	4.36	14.37	4.40
							10	17.11	4.28	16.76	4.34	16.44	4.40	16.30	4.43	15.90	4.50	15.67	4.55
							15	18.82	4.45	18.46	4.52	18.13	4.58	17.97	4.61	17.55	4.69	17.31	4.73
2000	2500	2500	5000	5000	17000	121%	-15	8.59	3.40	8.32	3.45	8.08	3.50	7.97	3.52	7.69	3.57	7.54	3.60
							-10	10.29	3.58	10.00	3.63	9.75	3.68	9.63	3.70	9.33	3.76	9.16	3.79
							-5	11.99	3.76	11.69	3.81	11.42	3.86	11.29	3.89	10.97	3.95	10.79	3.98
							0	13.69	3.93	13.38	3.99	13.09	4.04	12.96	4.07	12.61	4.13	12.41	4.17
							2	14.37	4.00	14.05	4.06	13.76	4.12	13.62	4.14	13.27	4.21	13.06	4.25
							7	15.74	4.14	15.41	4.20	15.10	4.26	15.00	4.28	14.58	4.36	14.37	4.40
							10	17.11	4.28	16.76	4.34	16.44	4.40	16.30	4.43	15.90	4.50	15.67	4.55
							15	18.82	4.45	18.46	4.52	18.13	4.58	17.97	4.61	17.55	4.69	17.31	4.73

12. Capacity Table

12-7. AJ140TXJ5KH/EA

HEATING

Combination (Capacity Index)					Combination (Total)	Combination (%)	Outdoor Temperature (°F,DB)	Indoor Temperature (°F, DB)											
								57.2		60.8		64.4		69.98		71.6		75.2	
								TC(kbtu)	PI(kW)	TC(kbtu)	PI(kW)	TC(kbtu)	PI(kW)	TC(kbtu)	PI(kW)	TC(kbtu)	PI(kW)	TC(kbtu)	PI(kW)
2000	2500	3500	3500	3500	15000	107%	-15	8.55	3.37	8.28	3.42	8.04	3.47	7.93	3.49	7.66	3.54	7.51	3.57
							-10	10.24	3.55	9.95	3.60	9.70	3.65	9.59	3.67	9.28	3.73	9.12	3.76
							-5	11.93	3.72	11.63	3.78	11.36	3.83	11.24	3.85	10.92	3.91	10.74	3.95
							0	13.63	3.90	13.31	3.95	13.03	4.01	12.90	4.03	12.55	4.10	12.36	4.13
							2	14.31	3.97	13.99	4.02	13.69	4.08	13.56	4.10	13.20	4.17	13.00	4.21
							7	15.67	4.10	15.33	4.16	15.03	4.22	14.93	4.24	14.51	4.32	14.30	4.36
							10	17.03	4.24	16.68	4.30	16.37	4.36	16.22	4.39	15.83	4.46	15.60	4.50
							15	18.73	4.41	18.37	4.48	18.04	4.54	17.89	4.57	17.47	4.64	17.23	4.69
2000	2500	3500	3500	5000	16500	118%	-15	8.59	3.40	8.32	3.45	8.08	3.50	7.97	3.52	7.69	3.57	7.54	3.60
							-10	10.29	3.58	10.00	3.63	9.75	3.68	9.63	3.70	9.33	3.76	9.16	3.79
							-5	11.99	3.76	11.69	3.81	11.42	3.86	11.29	3.89	10.97	3.95	10.79	3.98
							0	13.69	3.93	13.38	3.99	13.09	4.04	12.96	4.07	12.61	4.13	12.41	4.17
							2	14.37	4.00	14.05	4.06	13.76	4.12	13.62	4.14	13.27	4.21	13.06	4.25
							7	15.74	4.14	15.41	4.20	15.10	4.26	15.00	4.28	14.58	4.36	14.37	4.40
							10	17.11	4.28	16.76	4.34	16.44	4.40	16.30	4.43	15.90	4.50	15.67	4.55
							15	18.82	4.45	18.46	4.52	18.13	4.58	17.97	4.61	17.55	4.69	17.31	4.73
2000	3500	3500	3500	3500	16000	114%	-15	8.59	3.40	8.32	3.45	8.08	3.50	7.97	3.52	7.69	3.57	7.54	3.60
							-10	10.29	3.58	10.00	3.63	9.75	3.68	9.63	3.70	9.33	3.76	9.16	3.79
							-5	11.99	3.76	11.69	3.81	11.42	3.86	11.29	3.89	10.97	3.95	10.79	3.98
							0	13.69	3.93	13.38	3.99	13.09	4.04	12.96	4.07	12.61	4.13	12.41	4.17
							2	14.37	4.00	14.05	4.06	13.76	4.12	13.62	4.14	13.27	4.21	13.06	4.25
							7	15.74	4.14	15.41	4.20	15.10	4.26	15.00	4.28	14.58	4.36	14.37	4.40
							10	17.11	4.28	16.76	4.34	16.44	4.40	16.30	4.43	15.90	4.50	15.67	4.55
							15	18.82	4.45	18.46	4.52	18.13	4.58	17.97	4.61	17.55	4.69	17.31	4.73
2000	3500	3500	3500	5000	17500	125%	-15	8.59	3.40	8.32	3.45	8.08	3.50	7.97	3.52	7.69	3.57	7.54	3.60
							-10	10.29	3.58	10.00	3.63	9.75	3.68	9.63	3.70	9.33	3.76	9.16	3.79
							-5	11.99	3.76	11.69	3.81	11.42	3.86	11.29	3.89	10.97	3.95	10.79	3.98
							0	13.69	3.93	13.38	3.99	13.09	4.04	12.96	4.07	12.61	4.13	12.41	4.17
							2	14.37	4.00	14.05	4.06	13.76	4.12	13.62	4.14	13.27	4.21	13.06	4.25
							7	15.74	4.14	15.41	4.20	15.10	4.26	15.00	4.28	14.58	4.36	14.37	4.40
							10	17.11	4.28	16.76	4.34	16.44	4.40	16.30	4.43	15.90	4.50	15.67	4.55
							15	18.82	4.45	18.46	4.52	18.13	4.58	17.97	4.61	17.55	4.69	17.31	4.73
2500	2500	2500	2500	2500	12500	89%	-15	7.73	2.75	7.49	2.79	7.27	2.83	7.17	2.84	6.92	2.89	6.79	2.91
							-10	9.26	2.89	9.00	2.94	8.77	2.98	8.67	2.99	8.39	3.04	8.25	3.07
							-5	10.79	3.04	10.52	3.08	10.27	3.12	10.16	3.14	9.87	3.19	9.71	3.22
							0	12.32	3.18	12.04	3.23	11.78	3.27	11.66	3.29	11.35	3.34	11.17	3.37
							2	12.94	3.24	12.65	3.28	12.38	3.33	12.26	3.35	11.94	3.40	11.76	3.43
							7	14.17	3.35	13.86	3.40	13.59	3.44	13.50	3.46	13.12	3.52	12.93	3.55
							10	15.40	3.46	15.09	3.51	14.80	3.56	14.67	3.58	14.31	3.64	14.11	3.68
							15	16.94	3.60	16.61	3.65	16.31	3.70	16.17	3.73	15.80	3.79	15.58	3.82
2500	2500	2500	2500	3500	13500	96%	-15	8.10	3.03	7.85	3.07	7.62	3.11	7.52	3.13	7.26	3.18	7.12	3.21
							-10	9.70	3.19	9.43	3.23	9.19	3.28	9.08	3.30	8.80	3.35	8.64	3.38
							-5	11.31	3.34	11.02	3.39	10.77	3.44	10.65	3.46	10.34	3.51	10.18	3.55
							0	12.92	3.50	12.62	3.55	12.35	3.60	12.22	3.62	11.89	3.68	11.71	3.71
							2	13.56	3.56	13.26	3.62	12.98	3.66	12.85	3.69	12.51	3.75	12.32	3.78
							7	14.85	3.69	14.53	3.74	14.24	3.79	14.15	3.81	13.76	3.88	13.55	3.91
							10	16.14	3.81	15.81	3.87	15.51	3.92	15.37	3.94	15.00	4.01	14.79	4.05
							15	17.76	3.96	17.41	4.02	17.10	4.08	16.95	4.10	16.56	4.17	16.33	4.21

12. Capacity Table

12-7. AJ140TXJ5KH/EA

HEATING

Combination (Capacity Index)					Combination (Total)	Combination (%)	Outdoor Temperature (°F,DB)	Indoor Temperature (°F, DB)											
								57.2		60.8		64.4		69.98		71.6		75.2	
								TC(kbtu)	PI(kW)	TC(kbtu)	PI(kW)	TC(kbtu)	PI(kW)	TC(kbtu)	PI(kW)	TC(kbtu)	PI(kW)	TC(kbtu)	PI(kW)
2500	2500	2500	2500	5000	15000	107%	-15	8.59	3.40	8.32	3.45	8.08	3.50	7.97	3.52	7.69	3.57	7.54	3.60
							-10	10.29	3.58	10.00	3.63	9.75	3.68	9.63	3.70	9.33	3.76	9.16	3.79
							-5	11.99	3.76	11.69	3.81	11.42	3.86	11.29	3.89	10.97	3.95	10.79	3.98
							0	13.69	3.93	13.38	3.99	13.09	4.04	12.96	4.07	12.61	4.13	12.41	4.17
							2	14.37	4.00	14.05	4.06	13.76	4.12	13.62	4.14	13.27	4.21	13.06	4.25
							7	15.74	4.14	15.41	4.20	15.10	4.26	15.00	4.28	14.58	4.36	14.37	4.40
							10	17.11	4.28	16.76	4.34	16.44	4.40	16.30	4.43	15.90	4.50	15.67	4.55
							15	18.82	4.45	18.46	4.52	18.13	4.58	17.97	4.61	17.55	4.69	17.31	4.73
2500	2500	2500	2500	6800	16800	120%	-15	8.59	3.40	8.32	3.45	8.08	3.50	7.97	3.52	7.69	3.57	7.54	3.60
							-10	10.29	3.58	10.00	3.63	9.75	3.68	9.63	3.70	9.33	3.76	9.16	3.79
							-5	11.99	3.76	11.69	3.81	11.42	3.86	11.29	3.89	10.97	3.95	10.79	3.98
							0	13.69	3.93	13.38	3.99	13.09	4.04	12.96	4.07	12.61	4.13	12.41	4.17
							2	14.37	4.00	14.05	4.06	13.76	4.12	13.62	4.14	13.27	4.21	13.06	4.25
							7	15.74	4.14	15.41	4.20	15.10	4.26	15.00	4.28	14.58	4.36	14.37	4.40
							10	17.11	4.28	16.76	4.34	16.44	4.40	16.30	4.43	15.90	4.50	15.67	4.55
							15	18.82	4.45	18.46	4.52	18.13	4.58	17.97	4.61	17.55	4.69	17.31	4.73
2500	2500	2500	3500	3500	14500	104%	-15	8.44	3.29	8.18	3.34	7.94	3.38	7.84	3.40	7.56	3.46	7.42	3.48
							-10	10.11	3.46	9.83	3.51	9.58	3.56	9.47	3.58	9.17	3.64	9.01	3.67
							-5	11.79	3.63	11.49	3.69	11.23	3.74	11.10	3.76	10.78	3.82	10.61	3.85
							0	13.46	3.80	13.15	3.86	12.87	3.91	12.74	3.94	12.40	4.00	12.21	4.04
							2	14.13	3.87	13.82	3.93	13.53	3.98	13.40	4.01	13.04	4.07	12.85	4.11
							7	15.48	4.01	15.15	4.07	14.85	4.12	14.75	4.14	14.34	4.21	14.13	4.25
							10	16.82	4.14	16.48	4.20	16.17	4.26	16.02	4.28	15.63	4.36	15.41	4.40
							15	18.51	4.31	18.15	4.37	17.82	4.43	17.67	4.46	17.26	4.53	17.02	4.58
2500	2500	2500	3500	5000	16000	114%	-15	8.59	3.40	8.32	3.45	8.08	3.50	7.97	3.52	7.69	3.57	7.54	3.60
							-10	10.29	3.58	10.00	3.63	9.75	3.68	9.63	3.70	9.33	3.76	9.16	3.79
							-5	11.99	3.76	11.69	3.81	11.42	3.86	11.29	3.89	10.97	3.95	10.79	3.98
							0	13.69	3.93	13.38	3.99	13.09	4.04	12.96	4.07	12.61	4.13	12.41	4.17
							2	14.37	4.00	14.05	4.06	13.76	4.12	13.62	4.14	13.27	4.21	13.06	4.25
							7	15.74	4.14	15.41	4.20	15.10	4.26	15.00	4.28	14.58	4.36	14.37	4.40
							10	17.11	4.28	16.76	4.34	16.44	4.40	16.30	4.43	15.90	4.50	15.67	4.55
							15	18.82	4.45	18.46	4.52	18.13	4.58	17.97	4.61	17.55	4.69	17.31	4.73
2500	2500	2500	5000	5000	17500	125%	-15	8.59	3.40	8.32	3.45	8.08	3.50	7.97	3.52	7.69	3.57	7.54	3.60
							-10	10.29	3.58	10.00	3.63	9.75	3.68	9.63	3.70	9.33	3.76	9.16	3.79
							-5	11.99	3.76	11.69	3.81	11.42	3.86	11.29	3.89	10.97	3.95	10.79	3.98
							0	13.69	3.93	13.38	3.99	13.09	4.04	12.96	4.07	12.61	4.13	12.41	4.17
							2	14.37	4.00	14.05	4.06	13.76	4.12	13.62	4.14	13.27	4.21	13.06	4.25
							7	15.74	4.14	15.41	4.20	15.10	4.26	15.00	4.28	14.58	4.36	14.37	4.40
							10	17.11	4.28	16.76	4.34	16.44	4.40	16.30	4.43	15.90	4.50	15.67	4.55
							15	18.82	4.45	18.46	4.52	18.13	4.58	17.97	4.61	17.55	4.69	17.31	4.73
2500	2500	3500	3500	3500	15500	111%	-15	8.59	3.40	8.32	3.45	8.08	3.50	7.97	3.52	7.69	3.57	7.54	3.60
							-10	10.29	3.58	10.00	3.63	9.75	3.68	9.63	3.70	9.33	3.76	9.16	3.79
							-5	11.99	3.76	11.69	3.81	11.42	3.86	11.29	3.89	10.97	3.95	10.79	3.98
							0	13.69	3.93	13.38	3.99	13.09	4.04	12.96	4.07	12.61	4.13	12.41	4.17
							2	14.37	4.00	14.05	4.06	13.76	4.12	13.62	4.14	13.27	4.21	13.06	4.25
							7	15.74	4.14	15.41	4.20	15.10	4.26	15.00	4.28	14.58	4.36	14.37	4.40
							10	17.11	4.28	16.76	4.34	16.44	4.40	16.30	4.43	15.90	4.50	15.67	4.55
							15	18.82	4.45	18.46	4.52	18.13	4.58	17.97	4.61	17.55	4.69	17.31	4.73

12. Capacity Table

12-7. AJ140TXJ5KH/EA

HEATING

Combination (Capacity Index)					Combination (Total)	Combination (%)	Outdoor Temperature (°F,DB)	Indoor Temperature (°F, DB)											
								57.2		60.8		64.4		69.98		71.6		75.2	
								TC(kbtu)	PI(kW)	TC(kbtu)	PI(kW)	TC(kbtu)	PI(kW)	TC(kbtu)	PI(kW)	TC(kbtu)	PI(kW)	TC(kbtu)	PI(kW)
2500	2500	3500	3500	5000	17000	121%	-15	8.59	3.40	8.32	3.45	8.08	3.50	7.97	3.52	7.69	3.57	7.54	3.60
							-10	10.29	3.58	10.00	3.63	9.75	3.68	9.63	3.70	9.33	3.76	9.16	3.79
							-5	11.99	3.76	11.69	3.81	11.42	3.86	11.29	3.89	10.97	3.95	10.79	3.98
							0	13.69	3.93	13.38	3.99	13.09	4.04	12.96	4.07	12.61	4.13	12.41	4.17
							2	14.37	4.00	14.05	4.06	13.76	4.12	13.62	4.14	13.27	4.21	13.06	4.25
							7	15.74	4.14	15.41	4.20	15.10	4.26	15.00	4.28	14.58	4.36	14.37	4.40
							10	17.11	4.28	16.76	4.34	16.44	4.40	16.30	4.43	15.90	4.50	15.67	4.55
							15	18.82	4.45	18.46	4.52	18.13	4.58	17.97	4.61	17.55	4.69	17.31	4.73
2500	3500	3500	3500	3500	16500	118%	-15	8.59	3.40	8.32	3.45	8.08	3.50	7.97	3.52	7.69	3.57	7.54	3.60
							-10	10.29	3.58	10.00	3.63	9.75	3.68	9.63	3.70	9.33	3.76	9.16	3.79
							-5	11.99	3.76	11.69	3.81	11.42	3.86	11.29	3.89	10.97	3.95	10.79	3.98
							0	13.69	3.93	13.38	3.99	13.09	4.04	12.96	4.07	12.61	4.13	12.41	4.17
							2	14.37	4.00	14.05	4.06	13.76	4.12	13.62	4.14	13.27	4.21	13.06	4.25
							7	15.74	4.14	15.41	4.20	15.10	4.26	15.00	4.28	14.58	4.36	14.37	4.40
							10	17.11	4.28	16.76	4.34	16.44	4.40	16.30	4.43	15.90	4.50	15.67	4.55
							15	18.82	4.45	18.46	4.52	18.13	4.58	17.97	4.61	17.55	4.69	17.31	4.73
3500	3500	3500	3500	3500	17500	125%	-15	8.59	3.40	8.32	3.45	8.08	3.50	7.97	3.52	7.69	3.57	7.54	3.60
							-10	10.29	3.58	10.00	3.63	9.75	3.68	9.63	3.70	9.33	3.76	9.16	3.79
							-5	11.99	3.76	11.69	3.81	11.42	3.86	11.29	3.89	10.97	3.95	10.79	3.98
							0	13.69	3.93	13.38	3.99	13.09	4.04	12.96	4.07	12.61	4.13	12.41	4.17
							2	14.37	4.00	14.05	4.06	13.76	4.12	13.62	4.14	13.27	4.21	13.06	4.25
							7	15.74	4.14	15.41	4.20	15.10	4.26	15.00	4.28	14.58	4.36	14.37	4.40
							10	17.11	4.28	16.76	4.34	16.44	4.40	16.30	4.43	15.90	4.50	15.67	4.55
							15	18.82	4.45	18.46	4.52	18.13	4.58	17.97	4.61	17.55	4.69	17.31	4.73

NOTE

1. Cooling capacity is based on 27°CDB / 19°CWB (indoor temperature), 35°CDB (outdoor temperature).
2. Heating capacity is based on 20°CDB (indoor temperature), 7°CDB/6°CWB (outdoor temperature).
3. The above is the value for connecting with the following indoor units.
   - AJ***TNAPKH : Premium Wind Free
4. Capacities are based on the following conditions:
   - Corresponding refrigerant piping length : 7.5m / - Level difference : 0m
5. The total ability of connected a indoor unit is up to 17.5kW
6. It is impossible to connect the indoor unit for one room only.
7. This data is reference data for temperature capacity trend.

13. Installation

Choosing the installation location

Installation location requirements

- Do not place the outdoor unit on its side or upside down. Failing to do so may cause the compressor lubrication oil to run into the cooling circuit and lead to serious damage to the unit.
- Install the unit in a well-ventilated location away from direct sunlight or strong winds.
- Install the unit in a location that would not obstruct any passageways or thoroughfares.
- Install the unit in a location that would not inconvenience or disturb your neighbors, as they could be affected by the noise or the airflow coming from the unit.
- Install the unit in a location where the pipes and the cables can be easily connected to the indoor unit.
- Install the unit on a flat, stable surface that can withstand the weight of the unit. Otherwise, the unit can generate noise and vibration during operation.
- Install the unit so that the air flow is directed towards the open area.
- Maintain sufficient clearance around the outdoor unit, especially from a radio, computer, stereo system, etc.

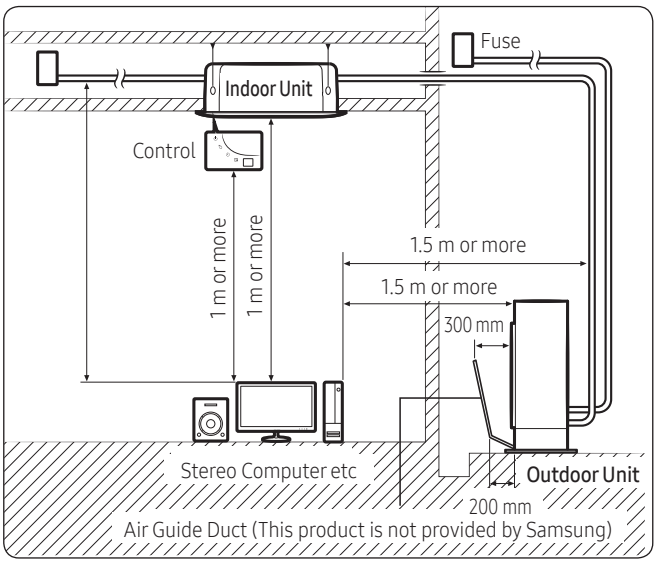

- Install the unit at a height where its base can be firmly fixed in place.
- Make sure that the water dripping from the drain hose runs away correctly and safely.

⚠ CAUTION

- You have just purchased a system air conditioner and it has been installed by your installation specialist.
- This device must be installed according to the national electrical rules.
- If your outdoor unit exceeds a net weight of 60 kg, do not install it on a suspended wall, but stand it on a floor.

- When installing the outdoor unit at the seaside, make sure that it is not directly exposed to sea breeze. If you cannot find an adequate place free from direct sea breeze, construct a protection wall or a protective fence.
  - Install the outdoor unit in a place (such as near buildings etc.) where it can be prevented from sea breeze. Failure to do so may cause a damage to the outdoor unit.

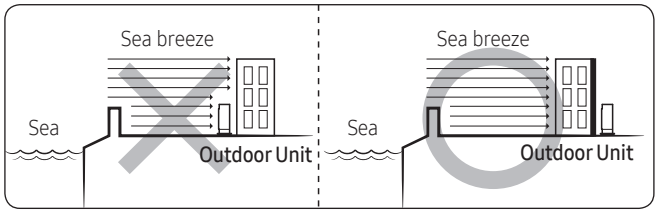

- If you cannot avoid installing the outdoor unit at the seaside, construct a protection wall around to block the sea breeze.
- Construct a protection wall with a solid material such as concrete to block the sea breeze. Make sure that the height and the width of the wall are 1.5 times larger than the size of the outdoor unit. Also, secure a space larger than 700 mm between the protection wall and the outdoor unit for exhausted air to ventilate.

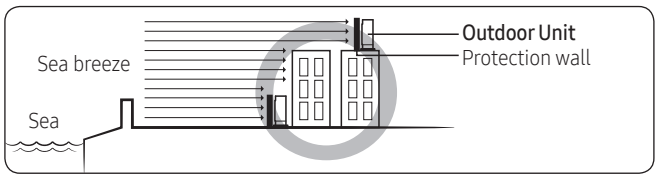

⚠ CAUTION

- Depending on the condition of the power supply, unstable power or voltage may cause malfunction of parts or control system (example: on a boat or places using power supplied from electric generator, etc.).
- Install the unit in a place where water can drain smoothly.

※ In case you want more information about the controllers and accessories, please refer to the Controller and Accessory TDB on pvi.Samsung.com site or Global Partner Portal site.

13. Installation

- If you have any difficulty finding installation location as prescribed above, contact your manufacturer for details.
- Consider that the salinity particles clinging to the external panels should be sufficiently washed out. Be sure to clean sea water and dust from the outdoor unit heat exchanger and apply a corrosion inhibitor on it at least once a year.
- Because the residual water at the bottom of the outdoor unit significantly promotes corrosion, make sure that the slope does not disturb drainage.
  - Keep the floor level so that rain does not accumulate.
  - Be careful not to block the drain hole due to foreign substance.
- Check the condition of the product periodically. When the product is to be shut down for a long period of time, such as off-peak hours, take appropriate measures like covering the product.
- If the product installed within 500 m of seashore, special anti-corrosion treatment is required.

Minimum clearances for the outdoor unit

When installing 1 outdoor unit

(Unit : mm)

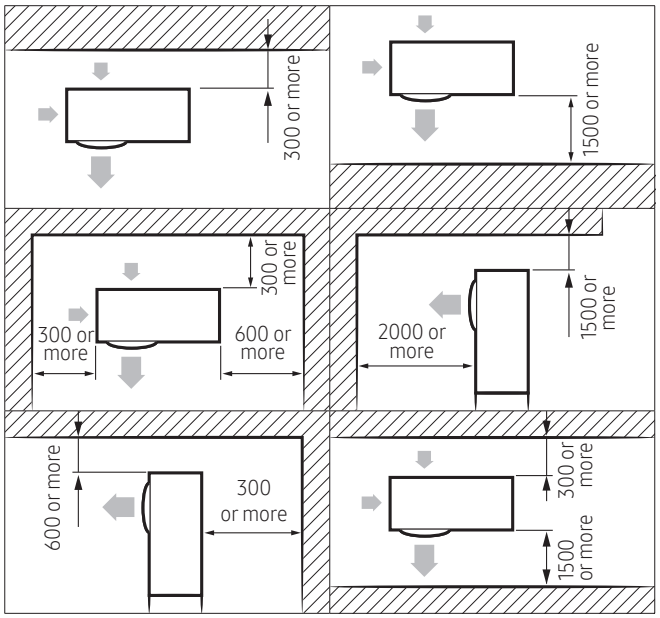

When installing more than 1 outdoor unit

(Unit : mm)

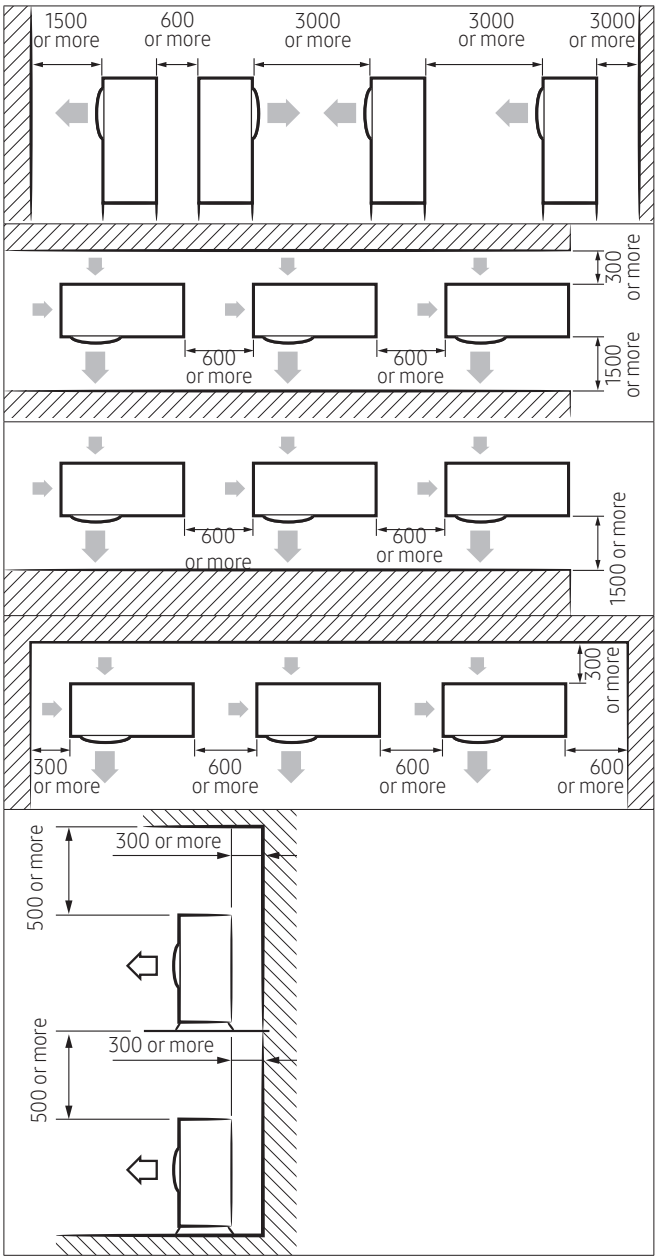

⚠ CAUTION

- The outdoor unit must be installed according to the specified distances in order to permit accessibility from each side, to guarantee correct operation, maintenance, and repair of the unit.
  The components of the outdoor unit must be reachable and removable under safe conditions for people and the unit.

※ In case you want more information about the controllers and accessories, please refer to the Controller and Accessory TDB on pvi.Samsung.com site or Global Partner Portal site.

13. Installation

Fixing the outdoor unit in place

Install the outdoor unit on a rigid and stable base to prevent disturbance from any noise caused by vibration. When installing the unit on tall stands or in a location exposed to strong winds, fix the unit securely to the ground or structure.

1 Position the outdoor unit so that the air flow is directed towards the outside, as indicated by the arrows on the top of the unit.
2 Attach the outdoor unit to the appropriate support using anchor bolts.
   - The ground wire for the telephone line cannot be used to ground the air conditioner.
3 If the outdoor unit is exposed to strong winds, install shield plates around the outdoor unit, so that the fan can operate correctly.

NOTE

- Install provided rubber legs to prevent vibration and noise.

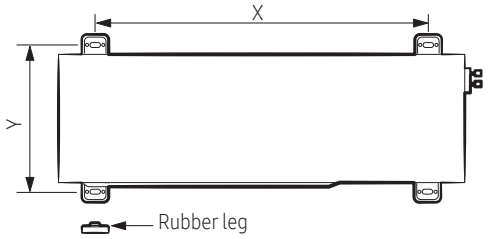

(Unit : mm)

Model	X	Y
AJ040/050TXJ2KH	602	310
AJ068TXJ3KH AJ080TXJ4KH	660	340

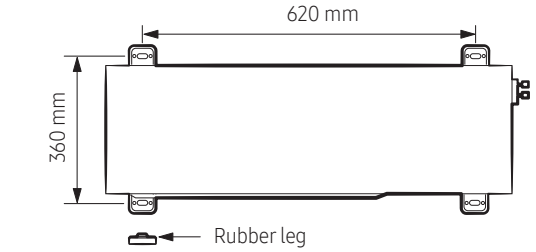

⚠ CAUTION

- Install a drain outlet at the lowest end around the base for outdoor unit drainage
- When installing the outdoor unit on the roof, waterproof the unit and check the ceiling strength.

Optional: Fixing the outdoor unit to a wall with a rack

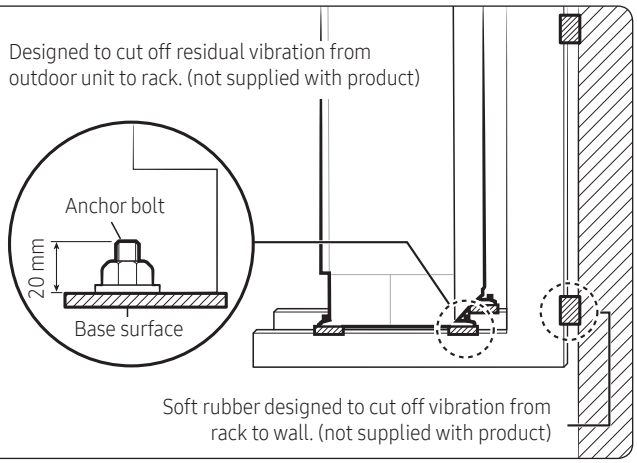

- Install a proper grommet in order to reduce noise and residual vibration transferred by the outdoor unit towards the wall.

⚠ CAUTION

- When installing an air guide duct, be sure to check the following:
   - The screws do not damage the copper pipe.
   - The air guide duct is fixed firmly on the guard fan.

※ In case you want more information about the controllers and accessories, please refer to the Controller and Accessory TDB on pvi.Samsung.com site or Global Partner Portal site.

13. Installation

Connecting the power cables, communication cable, and controllers

You must connect the following three electrical cables to the outdoor unit:

- The main power cable between the auxiliary circuit breaker and the outdoor unit.
- The outdoor-to-indoor power cable between the outdoor unit and the indoor unit.
- The communication cable between the outdoor unit and the indoor unit.

⚠ CAUTION

- During installation, make first the refrigerant connections and then the electrical connections. If the unit is being removed, first disconnect the electrical cables and then the refrigerant connections.
- Connect the air conditioner to the earthing system before making the electrical connections.

NOTE

- Especially, if your outdoor unit is the one designed for Russian and European markets, consult the supply authority, if necessary, to estimate and reduce the supply system impedance before installation.

Connecting wire conduits

For AJ125TXJ5KH / AJ140TXJ5KH models only

When connecting cables between the indoor unit and the outdoor unit, use conduits to protect the cables.

1 Remove the conduit plate from the product.

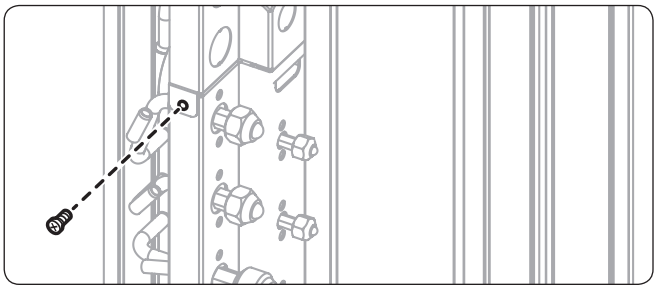

2 Remove conduit knock-outs for the required number of connections.

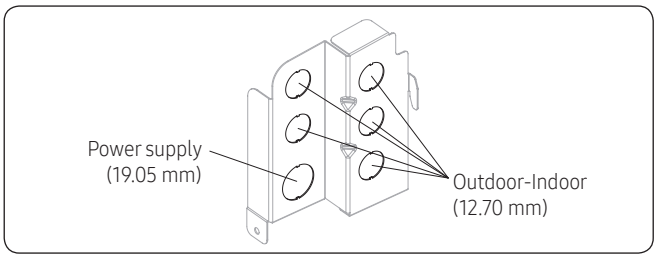

3 Insert the cables through the conduits, and then fix the conduits to the conduit plate with the lock nuts.

4 Apply silicone to the end of the hose to prevent rain from entering the hose.

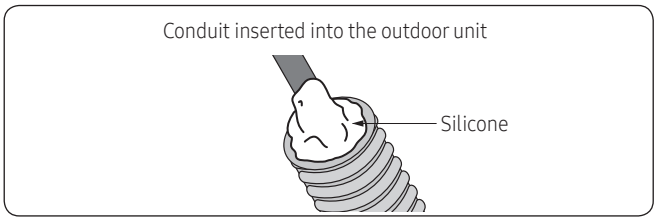

5 Connect the cables to the outdoor units.
For how to connect the cables, refer to the next page.

6 Attach the conduit plate to the product.

※ In case you want more information about the controllers and accessories, please refer to the Controller and Accessory TDB on pvi.Samsung.com site or Global Partner Portal site.

13. Installation

Conncting the cables to the outdoor unit

AJ040/050TXJ2KH

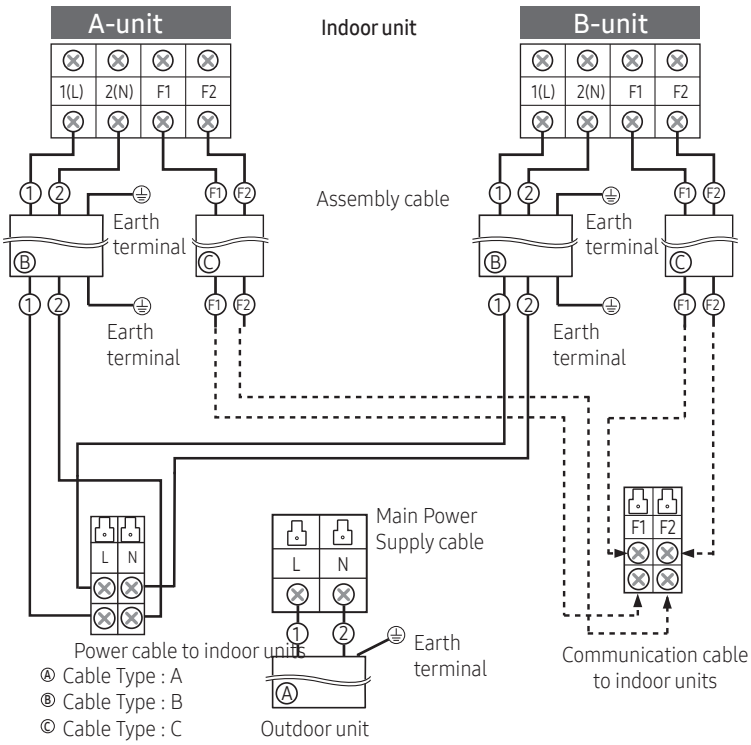

AJ068TXJ3KH

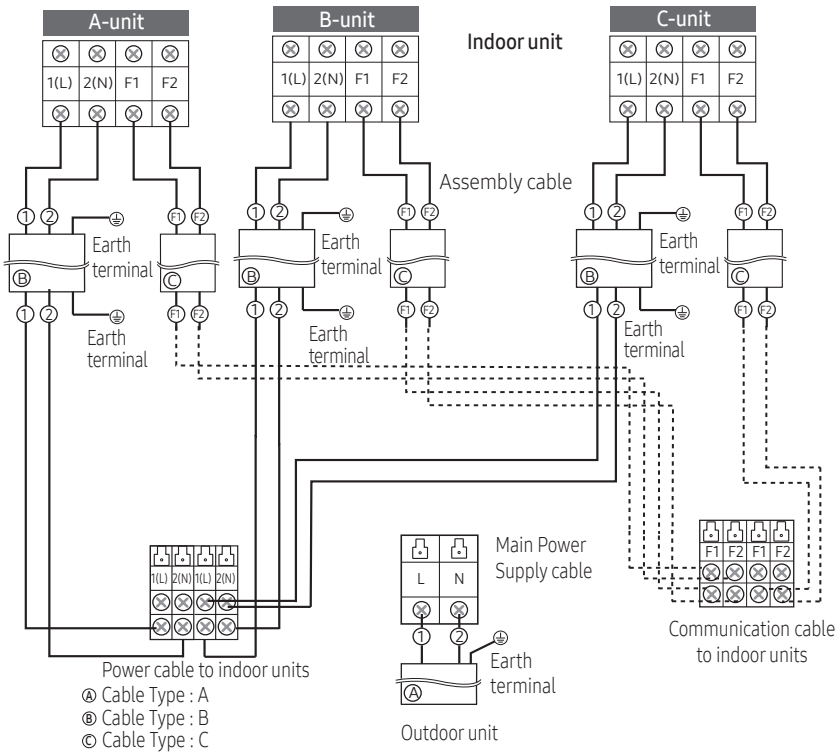

※ In case you want more information about the controllers and accessories, please refer to the Controller and Accessory TDB on pvi.Samsung.com site or Global Partner Portal site.

13. Installation

AJ080TXJ4KH

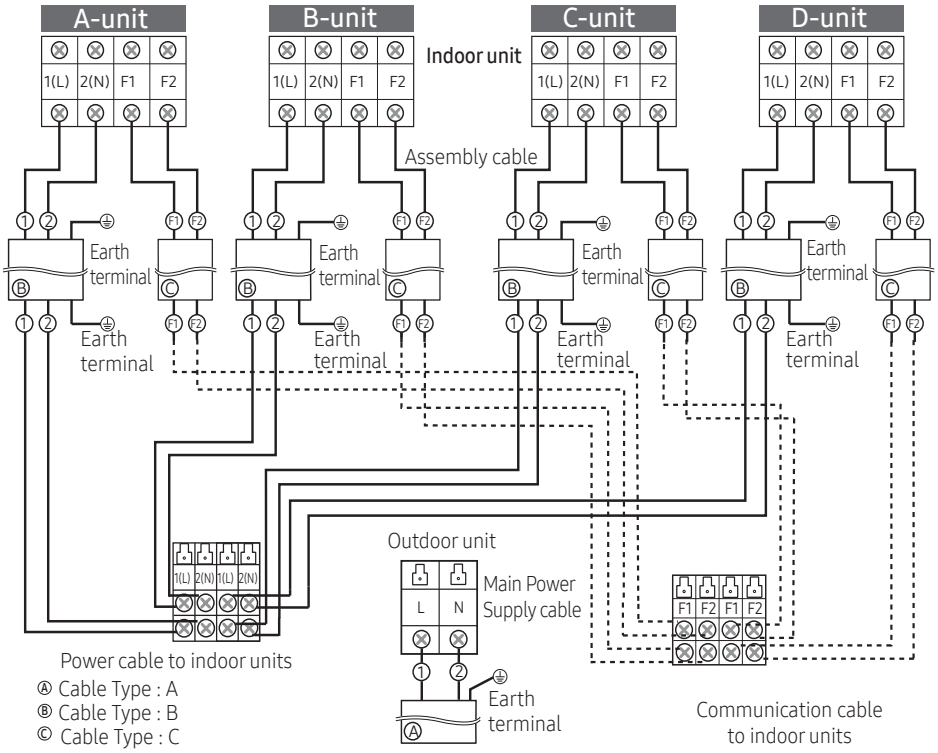

※ In case you want more information about the controllers and accessories, please refer to the Controller and Accessory TDB on pvi.Samsung.com site or Global Partner Portal site.

13. Installation

AJ100/125/140TXJ5KH/EA

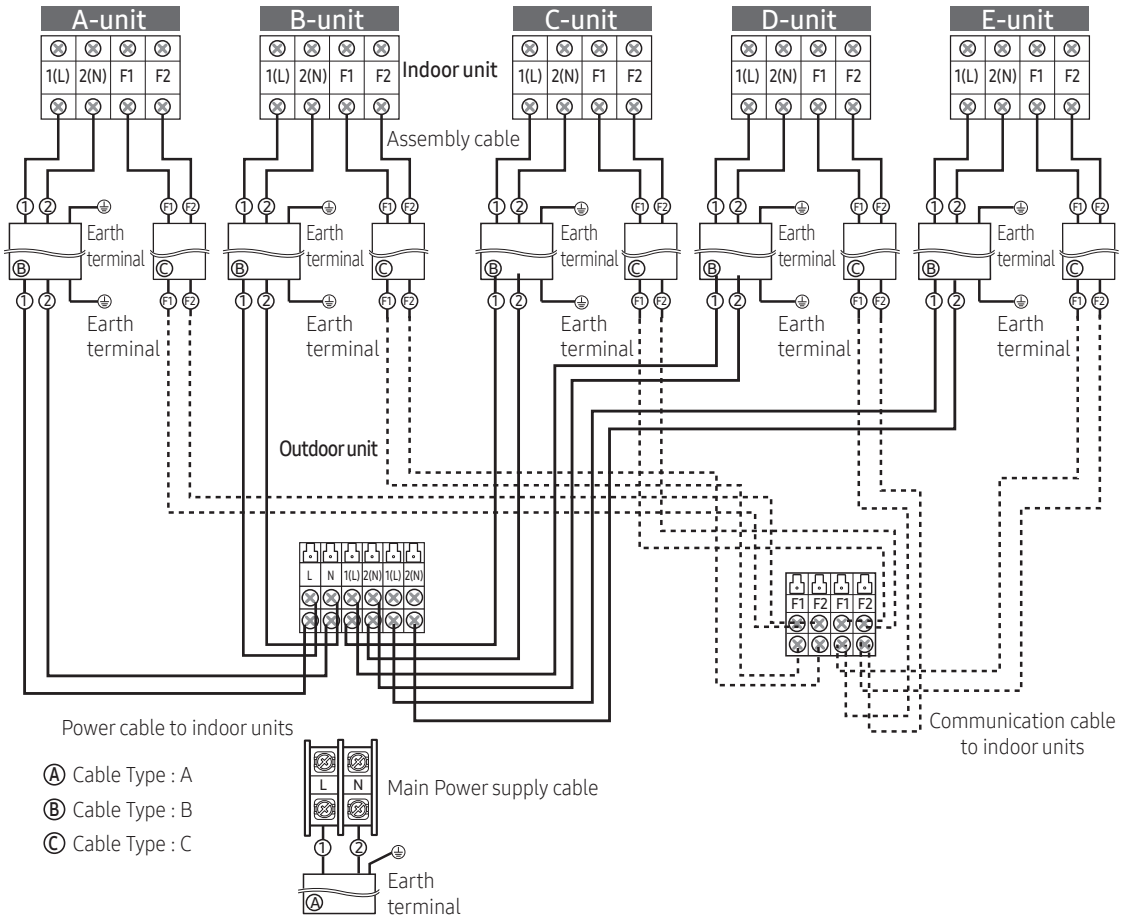

Specification for circuit breaker and power supply cord

- Power supply cord is not supplied with air conditioner.
- Select the power supply cord in accordance with relevant local and national regulations.
- Wire size must comply with the applicable local and national code.
- Specifications for local wiring power supply cord and branch wiring are in compliance with local cord.

※ In case you want more information about the controllers and accessories, please refer to the Controller and Accessory TDB on pvi.Samsung.com site or Global Partner Portal site.

13. Installation

Model		Outdoor Unit		Maximum Input Current [A]			Power Supply	
		Rated		Outdoor	Indoor (Max.)	Total	MCA	MFA
Outdoor Unit	Indoor Unit	Hz	Volts					
AJ040TXJ2KH	2 Room	50/60	1phase,220-240	8.5	0.8	9.3	9.30	10.63
AJ050TXJ2KH	2 Room	50/60	1phase,220-240	11.0	0.9	11.9	11.90	13.75
AJ068TXJ3KH	3 Room	50/60	1phase,220-240	14.0	1.2	15.2	15.20	17.50
AJ080TXJ4KH	4 Room	50/60	1phase,220-240	16.6	1.6	18.2	18.20	20.75
AJ100TXJ5KH	5 Room	50/60	1phase, 220-240	23.0	2.0	25.0	25.00	28.75
AJ125TXJ5KH	5 Room	50/60	1phase, 220-240	32.0	2.0	34.0	34.00	40.00
AJ140TXJ5KH	5 Room	50/60	1phase, 220-240	32.0	2.0	34.0	34.00	40.00

NOTE

1. Power Supply cords of parts of appliances for outdoor use shall not be lighter than polychloroprene sheathed flexible cord. (Code designation IEC:60245 IEC 57 / CENELEC: H05RN-F , IEC:60245 IEC 66 / CENELEC: H07RN-F)
2. Select power supply cord based on MCA.
3. MFA is used to select the circuit breaker and the ground fault circuit interrupter (earth leakage circuit breaker).
4. MCA represents maximum input current.
5. MFA represents capacity which may accept MCA.

Abbreviations

- MCA : Min. Circuit Amps. (A)
- MFA : Max. Fuse Amps. (A)

Screw	Tighten Torque(kgf.cm)	Position
M4	12.0~18.0	1(L),2(L),L,N,F1,F2

Tightening power terminal

- Connect the cables to the terminal board using the compressed ring terminal.
- Use rated cables only.
- Connect the cables with driver and wrench that can apply the rated torque to the screws.
- Make sure that appropriate tightening torque is applied for cable connection. If the terminal is loose, arc heat may occur and cause fire and if the terminal is connected too firmly, terminal may get damaged.

※ In case you want more information about the controllers and accessories, please refer to the Controller and Accessory TDB on pvi.Samsung.com site or Global Partner Portal site.

13. Installation

Central control connection (optional)

AJ040TXJ2KH/EA, AJ050TXJ2KH/EA, AJ068TXJ3KH/EA, AJ080TXJ4KH/EA

PCB MAIN - OUT

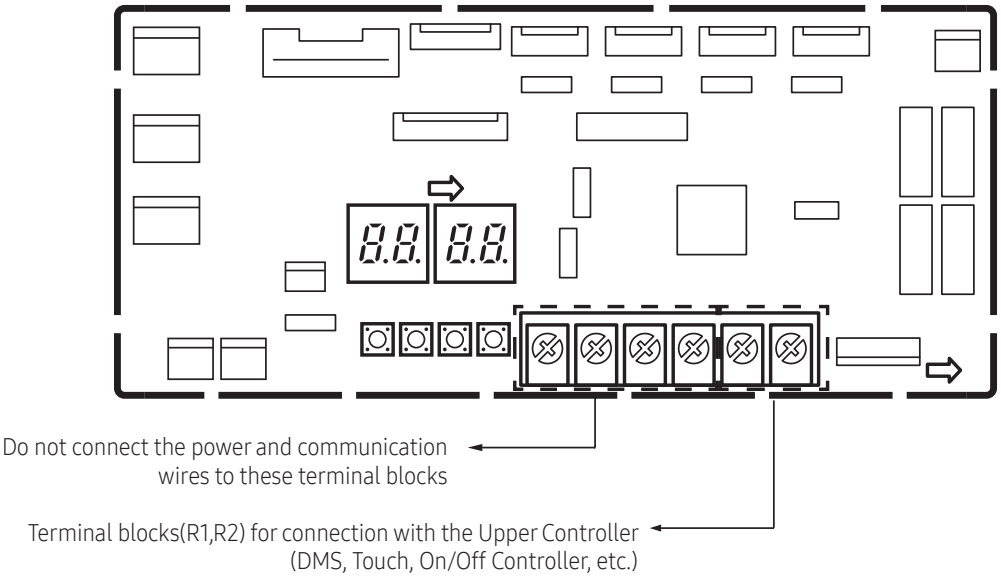

1 Turn the power off and take off the cover of the outdoor units.
2 Connect R1/R2 lines which are upper controller communication cables referring to upper figure. (Upper controller power should be off.)
3 Assemble a cover of the outdoor unit and turn the power on.
4 Check the communication status.
5 If you install a upper controller to the outdoor unit, every indoor unit which is connected to the outdoor unit can be controlled simultaneously.

※ In case you want more information about the controllers and accessories, please refer to the Controller and Accessory TDB on pvi.Samsung.com site or Global Partner Portal site.

13. Installation

PCB MAIN - OUT

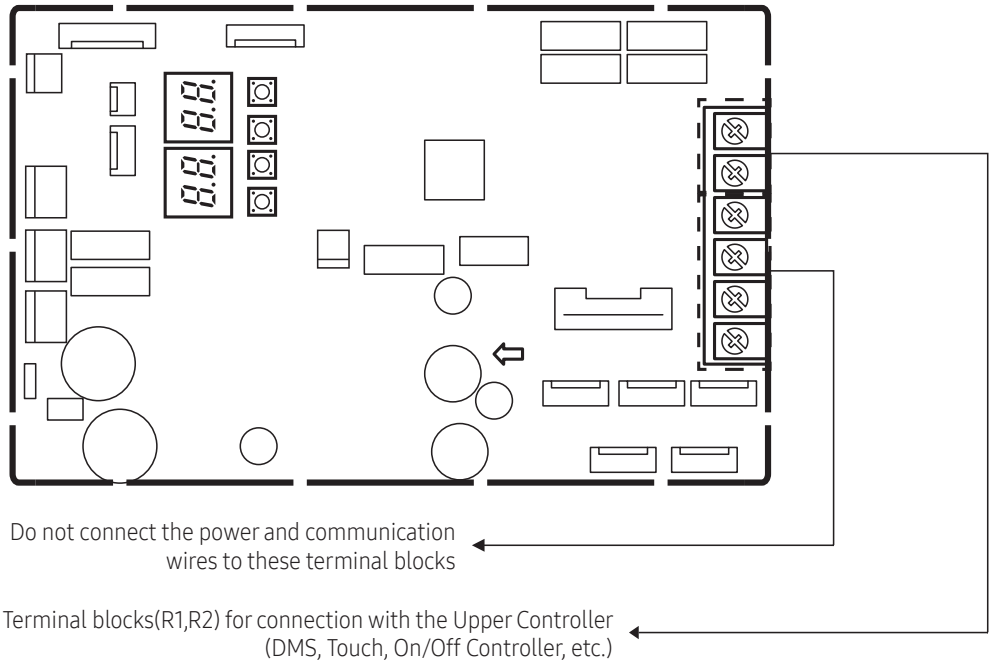

1 Turn the power off and take off the cover of the outdoor units.

2 Connect R1/R2 lines which are upper controller communication cables referring to upper figure. (Upper controller power should be off.)

3 Assemble a cover of the outdoor unit and turn the power on.

4 Check the communication status.

5 If you install a upper controller to the outdoor unit, every indoor unit which is connected to the outdoor unit can be controlled simultaneously.

※ In case you want more information about the controllers and accessories, please refer to the Controller and Accessory TDB on pvi.Samsung.com site or Global Partner Portal site.

13. Installation

Outdoor-to-indoor power terminal specifications

- Connect the cables to the terminal board using the compressed ring terminal.
- Cover a solderless ring terminal and a connector part of the power cable and then connect it.

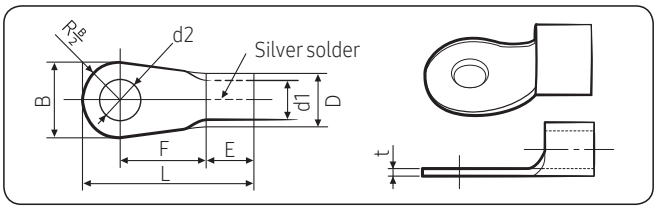

Norminal dimensions for cable (mm²)	Norminal dimensions for screw (mm)	B		D		d1		E	F	L	d2		t
		Standard dimension (mm)	Allowance (mm)	Standard dimension (mm)	Allowance (mm)	Standard dimension (mm)	Allowance (mm)	Min. (mm)	Min. (mm)	Max. (mm)	Standard dimension (mm)	Allowance (mm)	Min. (mm)
1.5	4	6.6	±0.2	3.4	+0.3 -0.2	1.7	±0.2	4.1	6	16	4.3	+0.2 0	0.7
	4	8											
2.5	4	6.6	±0.2	4.2	+0.3 -0.2	2.3	±0.2	6	6	17.5	4.3	+0.2 0	0.8
	4	8.5											
4	4	9.5	±0.2	5.6	+0.3 -0.2	3.4	±0.2	6	5	20	4.3	+ 0.2 0	0.9

- Connect the rated cables only.
- Connect using a driver which is able to apply the rated torque to the screws.
- If the terminal is loose, fire may occur caused by arc. If the terminal is connected too firmly, the terminal may be damaged.

Tightening torque (kgf • cm)	
M4	12.0 to 18.0
M5	20.0 to 30.0

- 1N · m = 10 kgf · cm

⚠ CAUTION

- When connecting cables, you can connect the cables to the electrical part or connect them through the holes below depending on the spot.
- Connect the communication cable between the indoor and outdoor units through a conduit to protect against external forces, and feed the conduit through the wall together with refrigerant piping.
- Remove all burrs at the edge of the knock-out hole and secure the cable to the outdoor knock-out using lining and bushing with an electrical insulation such as rubber and so on.
- Must keep the cable in a protection tube.
- Keep distances of 50mm or more between power cable and communication cable.
- When the cables are connected through the hole, remove the Plate bottom.

※ In case you want more information about the controllers and accessories, please refer to the Controller and Accessory TDB on pvi.Samsung.com site or Global Partner Portal site.

13. Installation

Outdoor-to-indoor power and communication cables specifications

Indoor power supply		
Power supply	Max/Min (V)	Indoor power cable
1Φ, 220-240V, 50/60 Hz	±10%	1.5 mm² ↑, 3 wires
Communication cable		
0.75 to 1.5 mm², 2 wires		

- Power supply cords of parts of appliances for outdoor use shall not be lighter than polychloroprene sheathed flexible cord. (Code designation IEC:60245 IEC 57 / CENELEC: H05RN-F or IEC:60245 IEC 66 / CENELEC: H07RN-F)
- When installing the indoor unit in a computer room or net work room, server room or in the presence of risk of disturbance to the communication cable, use the double shielded (tape aluminium / polyester braid + copper) cable of FROHH2R type.

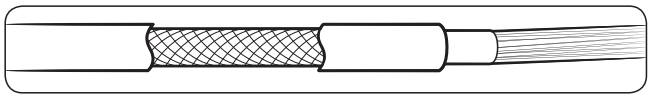

Connecting the refrigerant pipe

◆ **AJ040/050TXJ2KH**

1 Piping outside diameter

Indoor unit	Out unit	Power supply Ø, V, Hz	Outside diameter	
			Liquid	Gas
020/025/026/035	AJ040TXJ2KH	1,220-240, 50/60	1/4"	3/8"
020/025/026/035	AJ050TXJ2KH	1,220-240, 50/60	1/4"	3/8"
050/052				1/2"

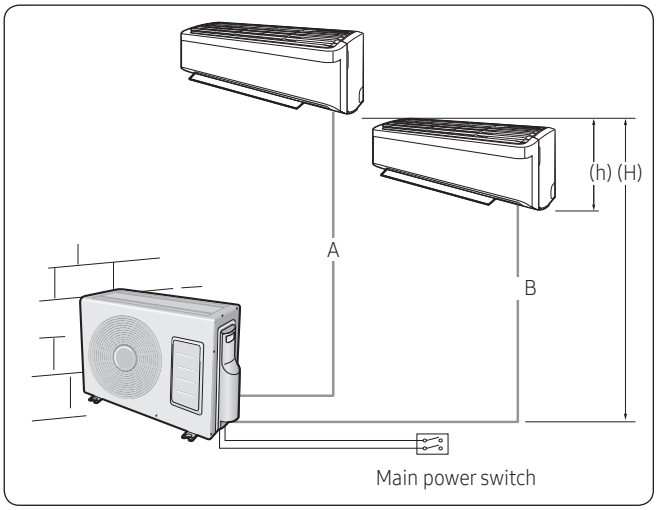

NOTE

- AJ040TXJ2KH Outdoor unit cannot be connected to the following indoor unit combination.
  - AJ0**TNNDKH/AJ0**TNLDKH

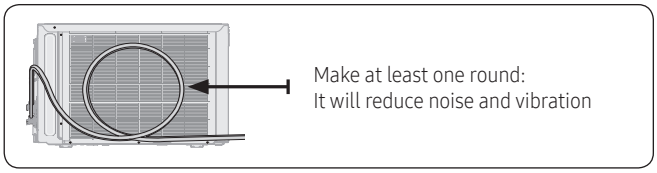

2 Piping length and the height.

	1 Room max length	2 Room total max length	Max height between indoor unit & outdoor unit	Max height between indoor units
Dimension	25m	30m	15m	7.5m
Composition	A,B	A+B	(H)	(h)

※ In case you want more information about the controllers and accessories, please refer to the Controller and Accessory TDB on pvi.Samsung.com site or Global Partner Portal site.

13. Installation

◆ **AJ068TXJ3KH**

1 Piping outside diameter

Indoor unit	Out unit	Power supply Ø, V, Hz	Outside diameter	
			Liquid	Gas
020/025/026/035	AJ068TXJ3KH	1,220-240, 50/60	1/4"	3/8"
050/052				1/2”

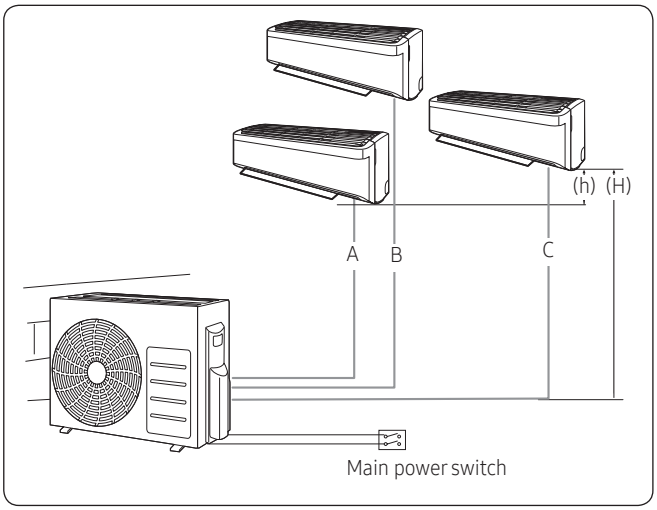

2 Piping length and the height

	1 Room max length	3 Room total max length	Max height between indoor unit & outdoor unit	Max height between indoor units
Dimension	25m	50m	15m	7.5m
Composition	A,B,C	A+B+C	(H)	(h)

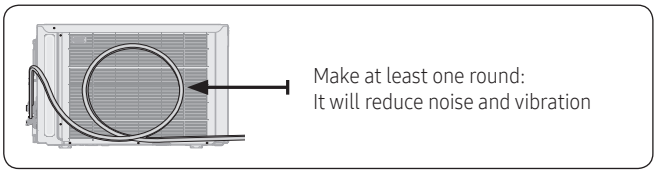

◆ **AJ080TXJ4KH**

1 Piping outside diameter

Indoor unit	Out unit	Power supply Ø, V, Hz	Outside diameter	
			Liquid	Gas
020/025/026/035	AJ080TXJ4KH	1,220-240, 50/60	1/4"	3/8"
050/052				1/2”
068/071				5/8”

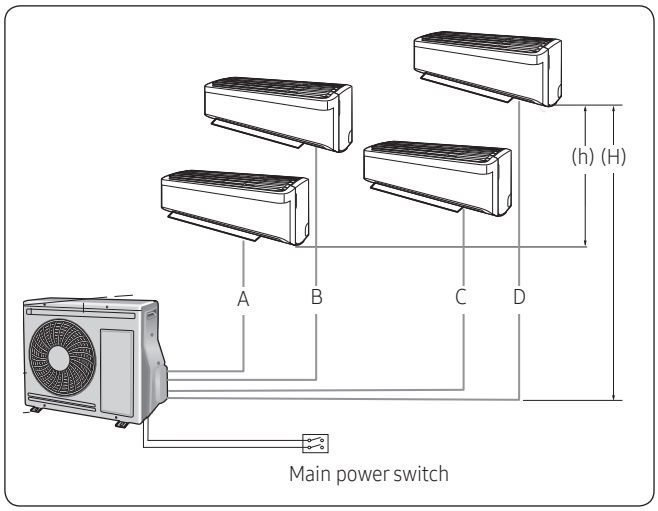

2 Piping length and the height

	1 Room max length	4 Room total max length	Max height between indoor unit & outdoor unit	Max height between indoor units
Dimension	25m	70m	15m	7.5m
Composition	A,B,C,D	A+B+C+D	(H)	(h)

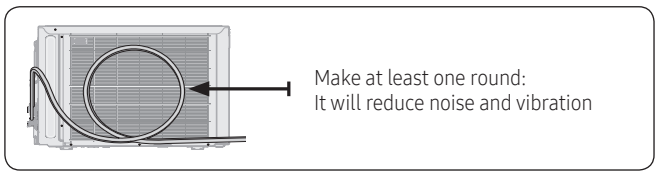

⚠ CAUTION

- Minimum pipe length is 3m to reduce noise and vibration.
- Tighten the nuts to the specified torques.
  If overtightened, the nuts could be broken so refrigerant may leak.
- Protect or enclose refrigerant tubing to avoid mechanical damage.

※ In case you want more information about the controllers and accessories, please refer to the Controller and Accessory TDB on pvi.Samsung.com site or Global Partner Portal site.

13. Installation

NOTE

- The appearance of the unit may be different from the diagram depending on the model.
- You can use the Cool and Heat modes in the following conditions :

Model	Cool	Heat
Outdoor temperature	-10 °C to 46 °C	-15 °C to 24 °C

  - It could take maximum 60 minutes to operate for the protection of the compressor,if the outdoor temperature is below -5°C.

◆ **AJ100TXJ5KH/AJ125TXJ5KH/AJ140TXJ5KH**

1 Piping outside diameter

Indoor unit	Out unit	Power supply Ø, V, Hz	Outside diameter	
			Liquid	Gas
020/025/026/035	AJ100TXJ5KH AJ125TXJ5KH AJ140TXJ5KH	1,220-240, 50/60	1/4"	3/8"
050/052				1/2"
068/071				5/8"

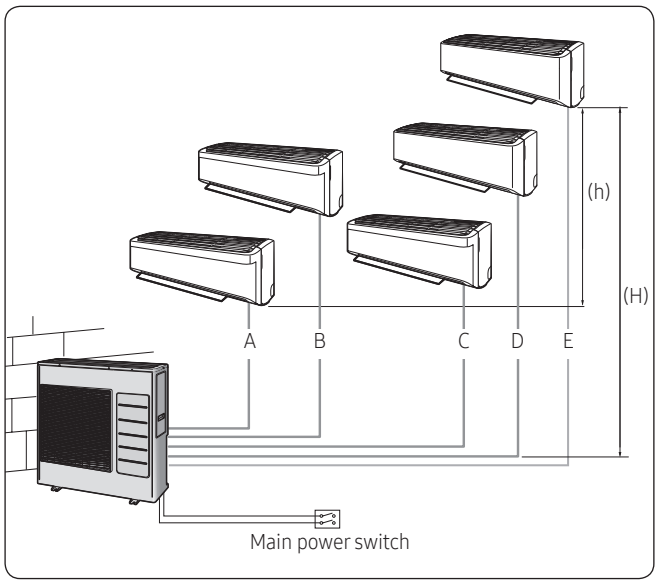

2 Piping length and the height.

	1 Room max length	5 Room total max length	Max height between indoor unit & outdoor unit	Max height between indoor units
Dimension	25 m	70 m	15 m	7.5 m
Composition	A, B, C, D, E	A + B + C + D + E	(H)	(h)

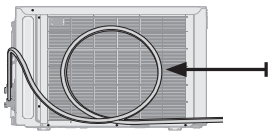

⚠ CAUTION

- Minimum pipe length is 3 m to reduce noise and vibration.
- Tighten the nuts to the specified torques.
  If overtightened, the nuts could be broken so refrigerant may leak.
- Protect or enclose refrigerant tubing to avoid mechanical damage.

NOTE

- The appearance of the unit may be different from the diagram depending on the model.
- You can use the Cool and Heat modes in the following conditions :

Mode	Cool	Heat
Outdoor temperature	-10 °C to 46 °C	-15 °C to 24 °C

- It could take maximum 60 minutes to operate for the protection of the compressor, if the outdoor temperature is below -5 °C.

※ In case you want more information about the controllers and accessories, please refer to the Controller and Accessory TDB on pvi.Samsung.com site or Global Partner Portal site.

2020. 08
Ver.2.0

Samsung Electronics Co., LTD.
Head Office (Suwon Korea) 129, Samsung-Ro, Yeongtong-Gu, Suwon City, Gyeonggi-Do, Korea 16677
Website : www.samsung.com, https://partnerhub.samsung.com Email : airconditioner@samsung.com
Images and data in this book may subject to change without prior notice.